DRAWINGS

Fig. 1

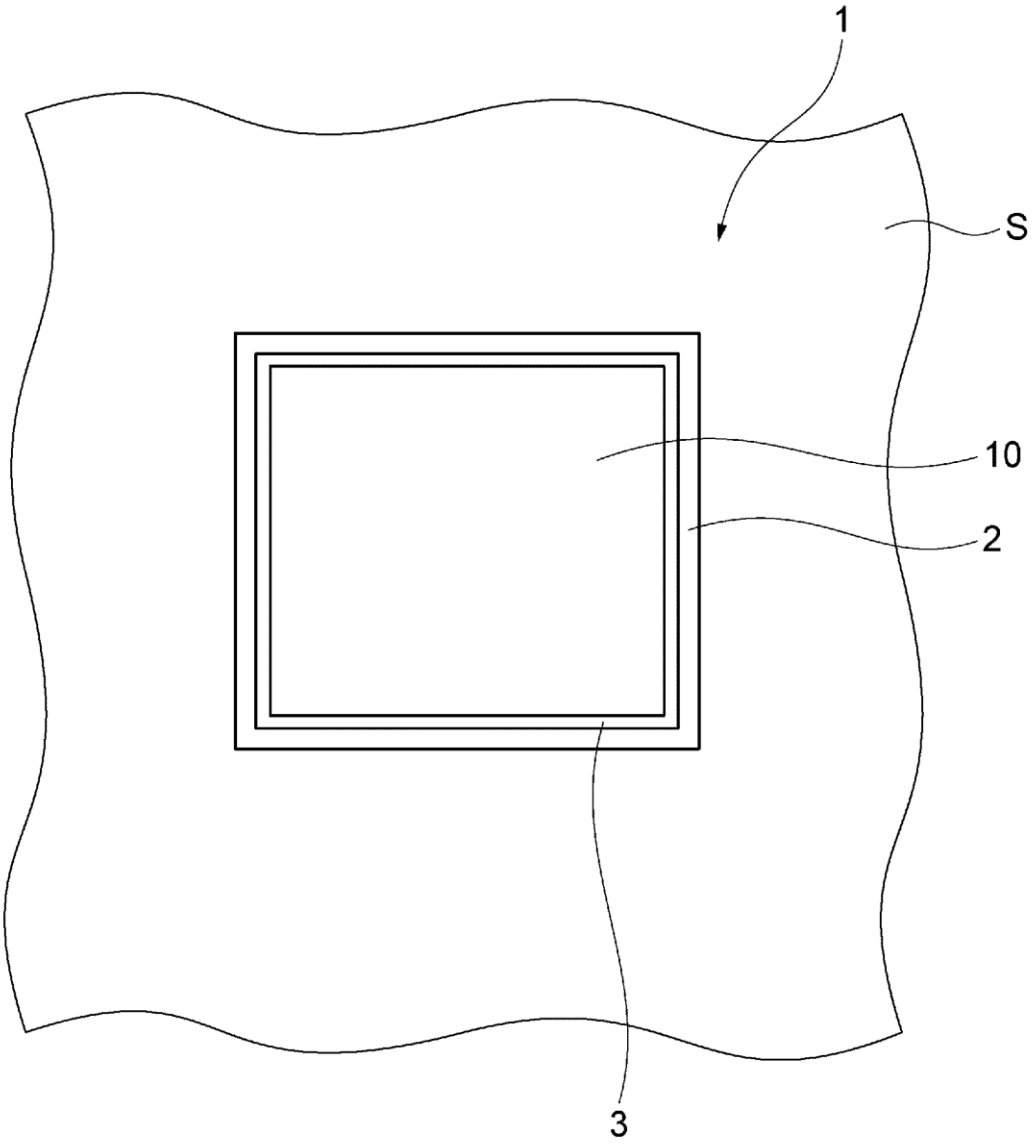

Fig. 2

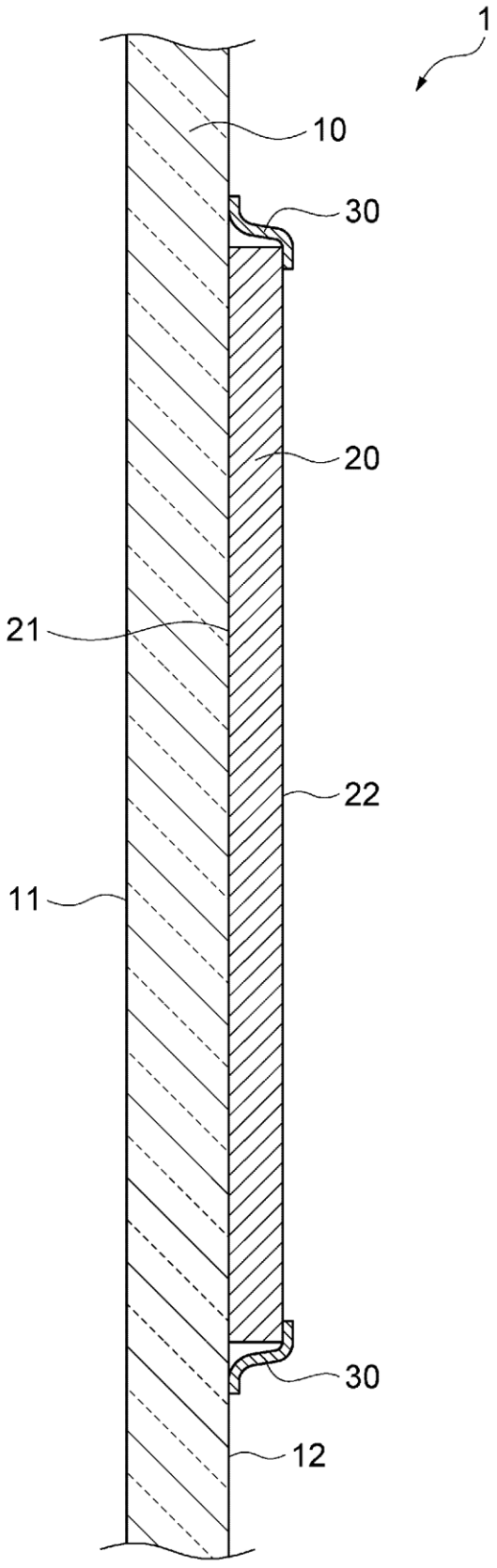

Fig. 3

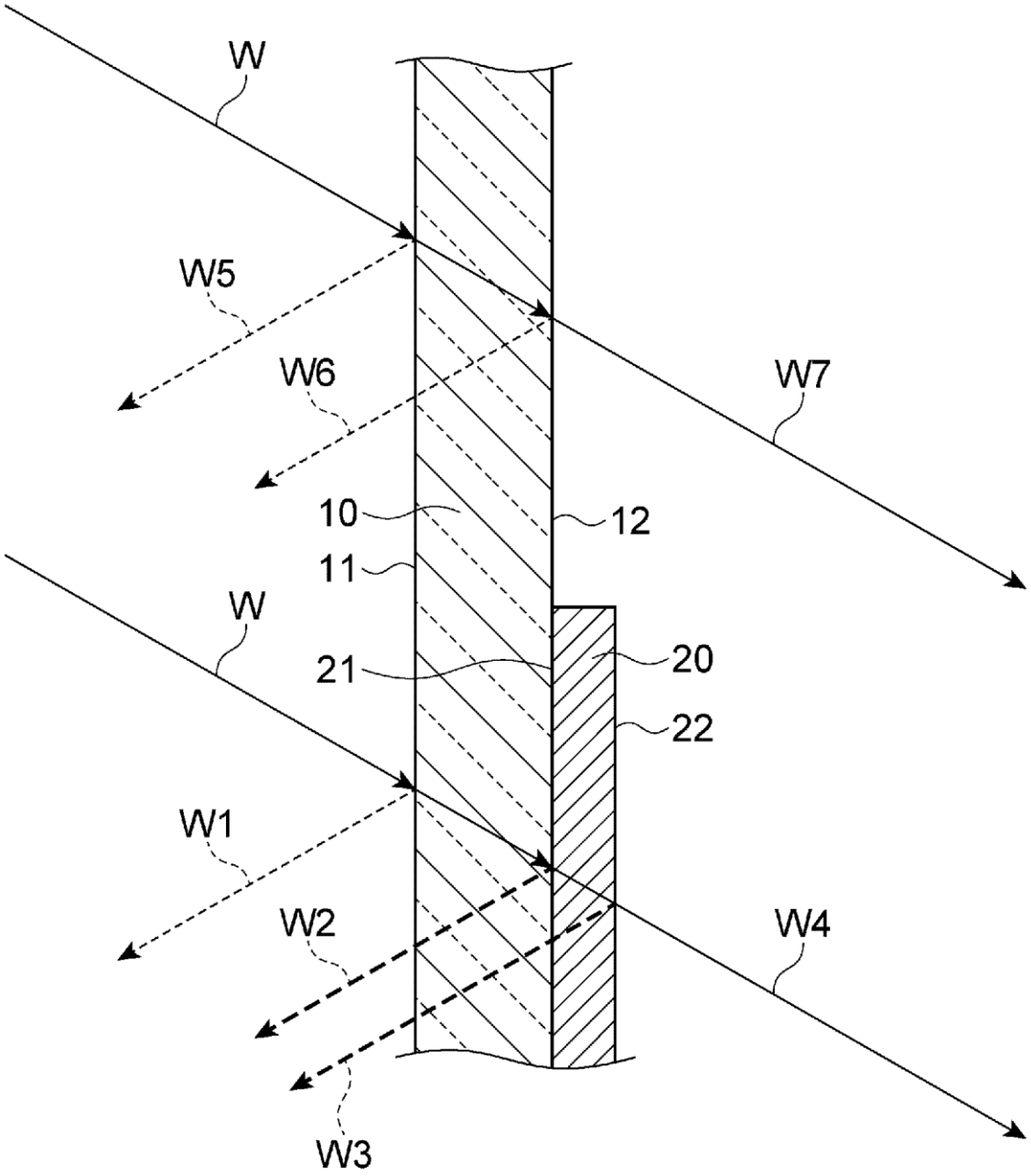

Fig. 4

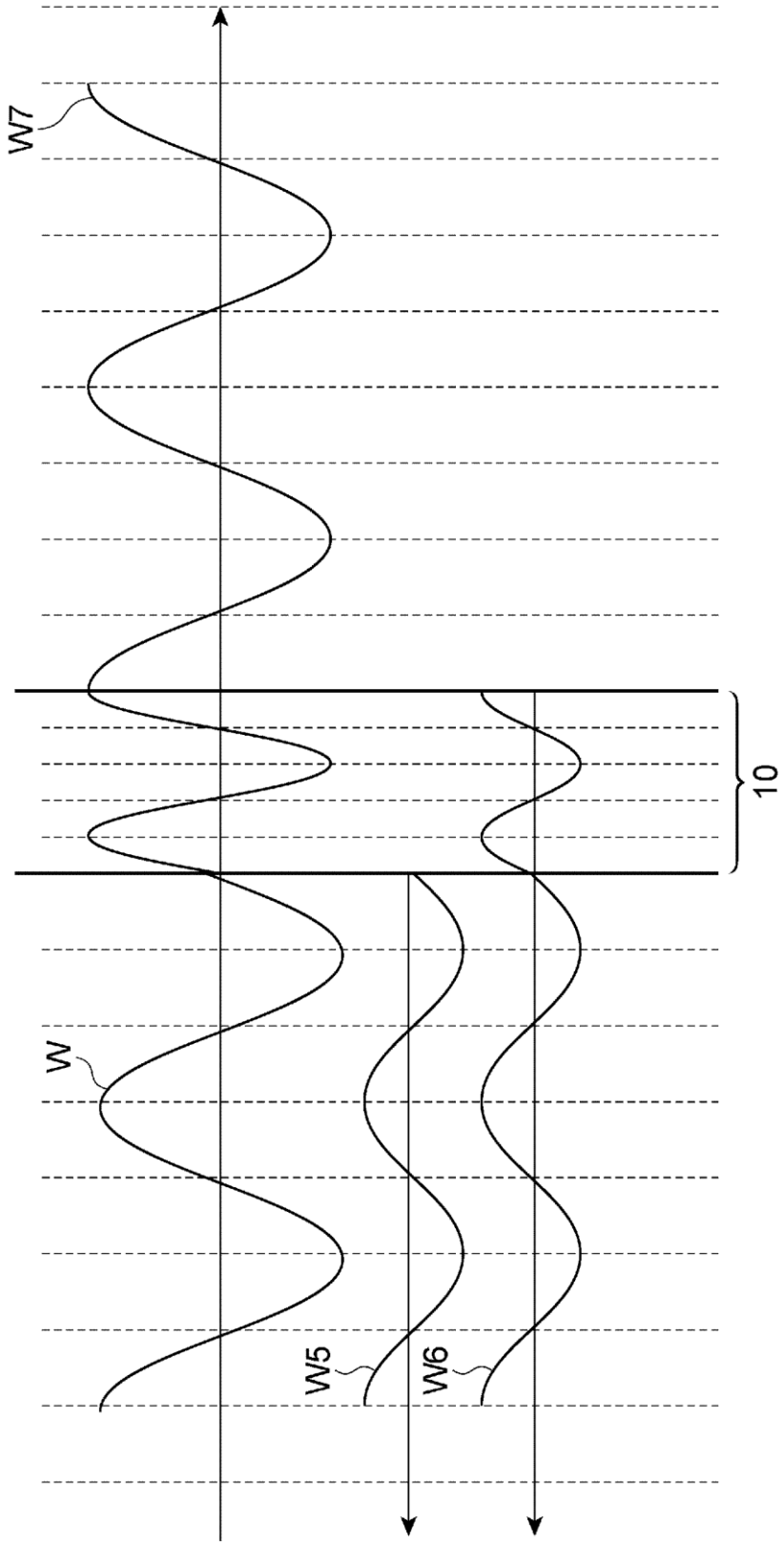

Fig. 5

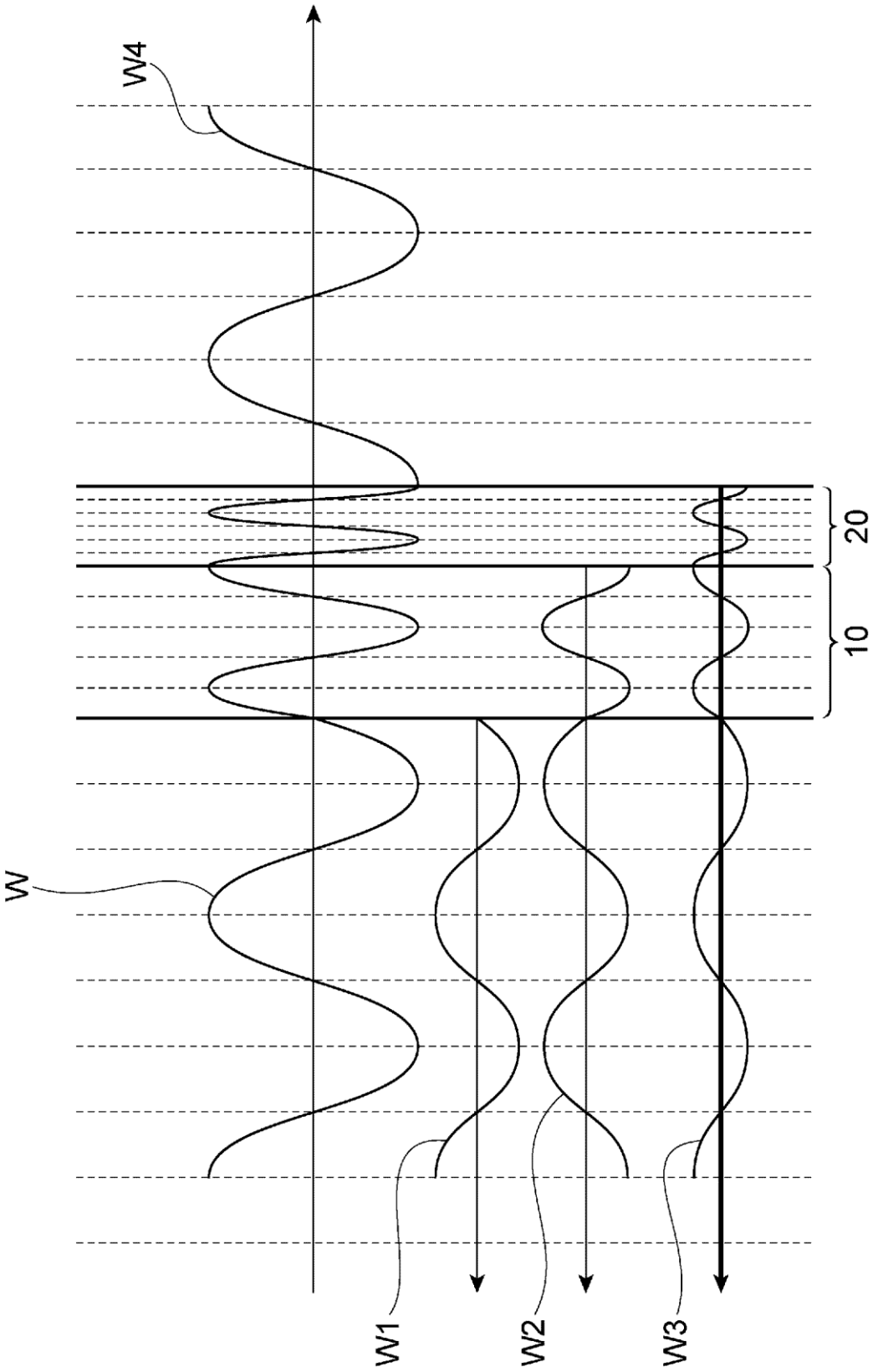

Fig. 6

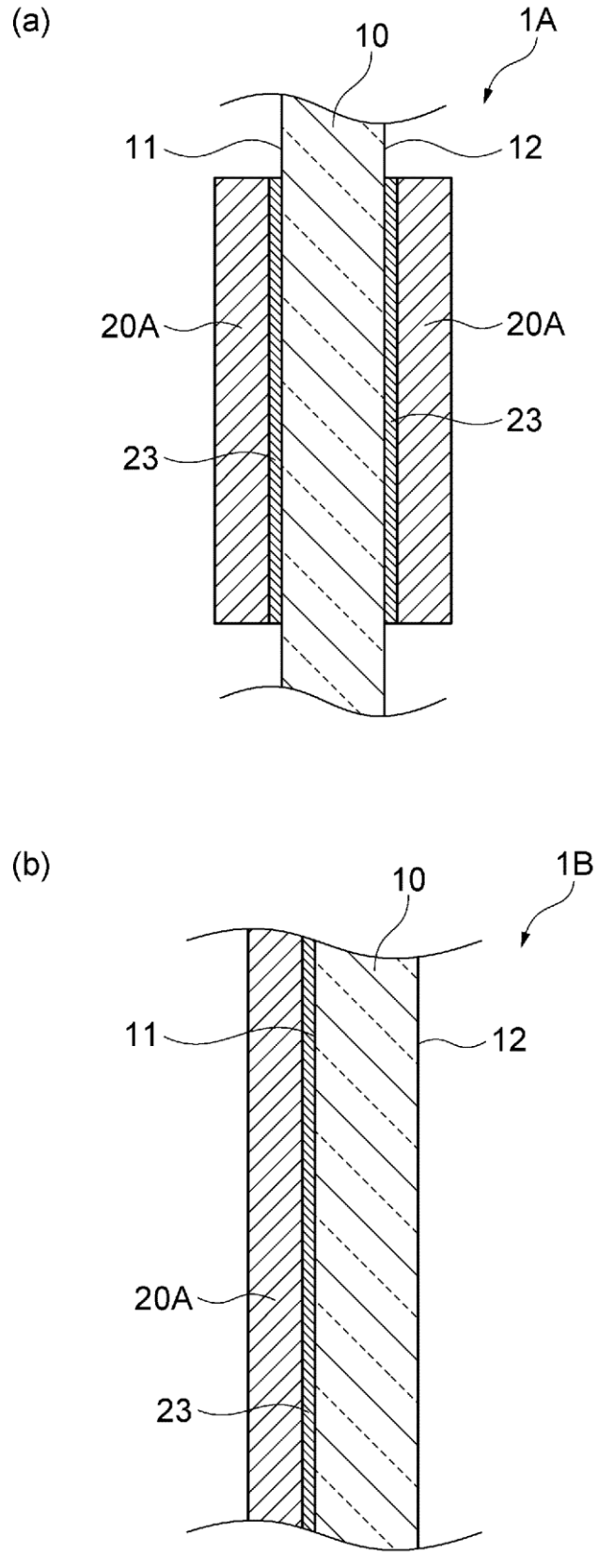

Fig. 7

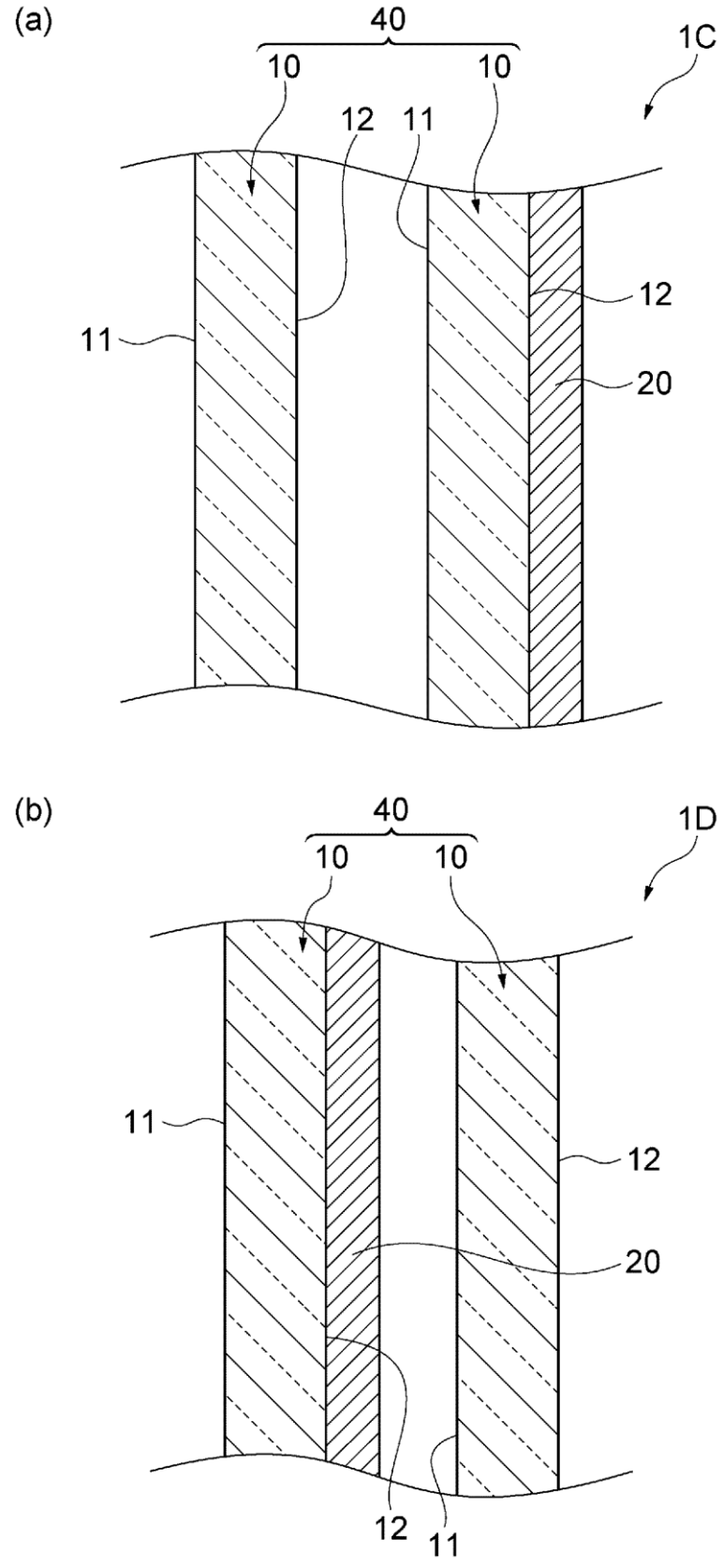

Fig. 8

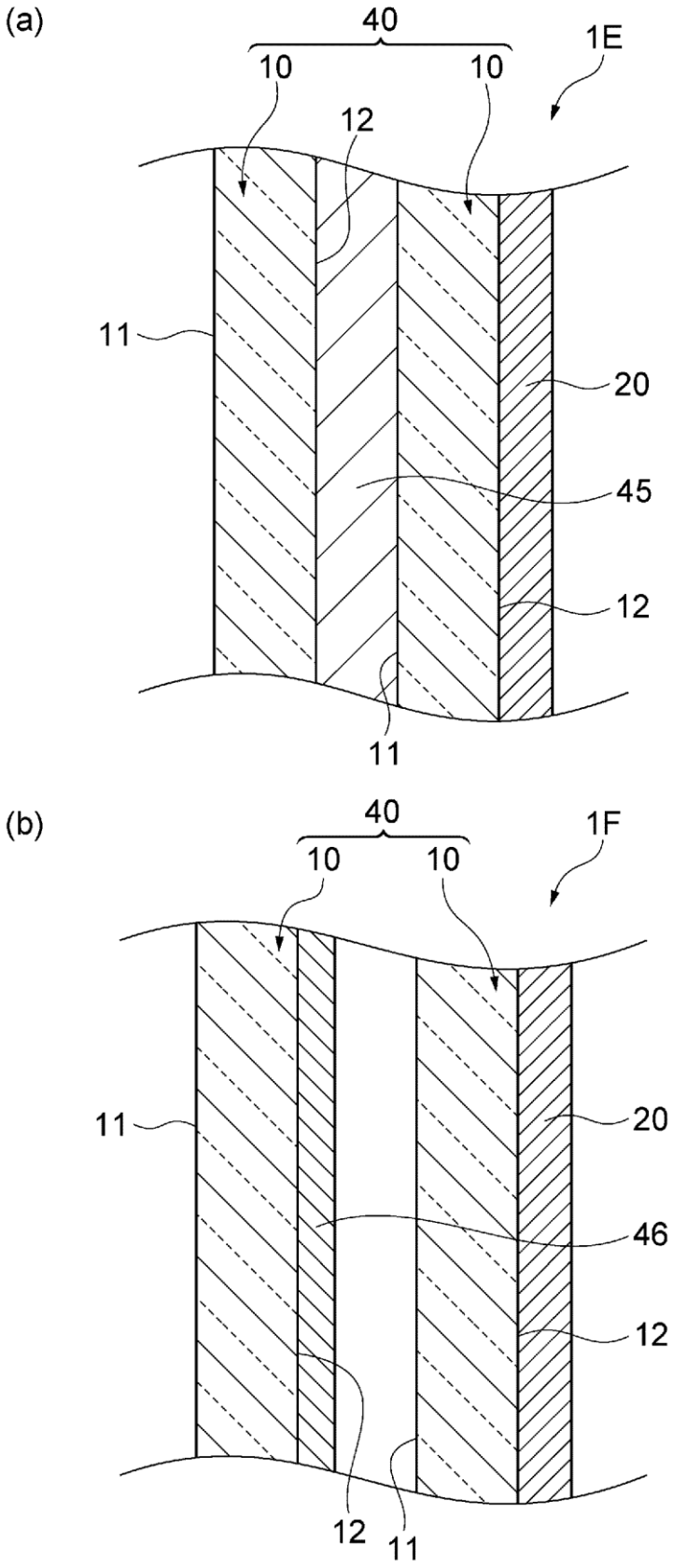

Fig. 9

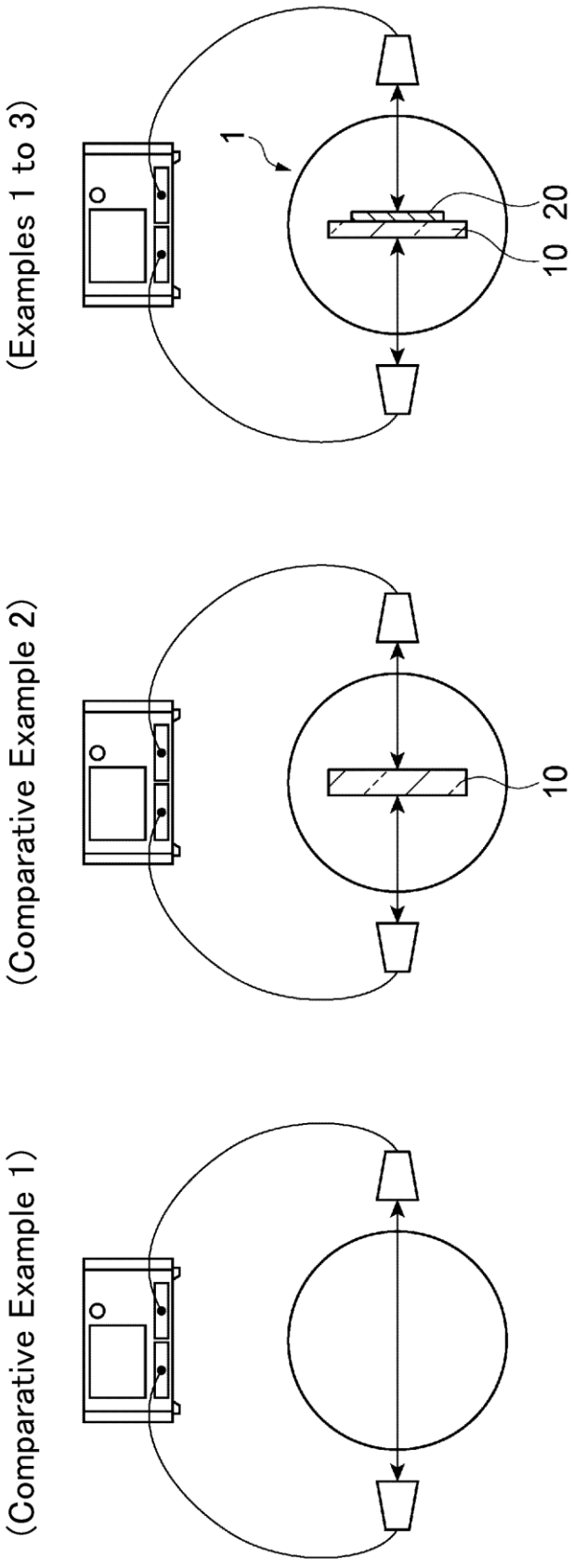
(Examples 1 to 3)
1
10
20
(Comparative Example 2)
10
(Comparative Example 1)

Fig. 10

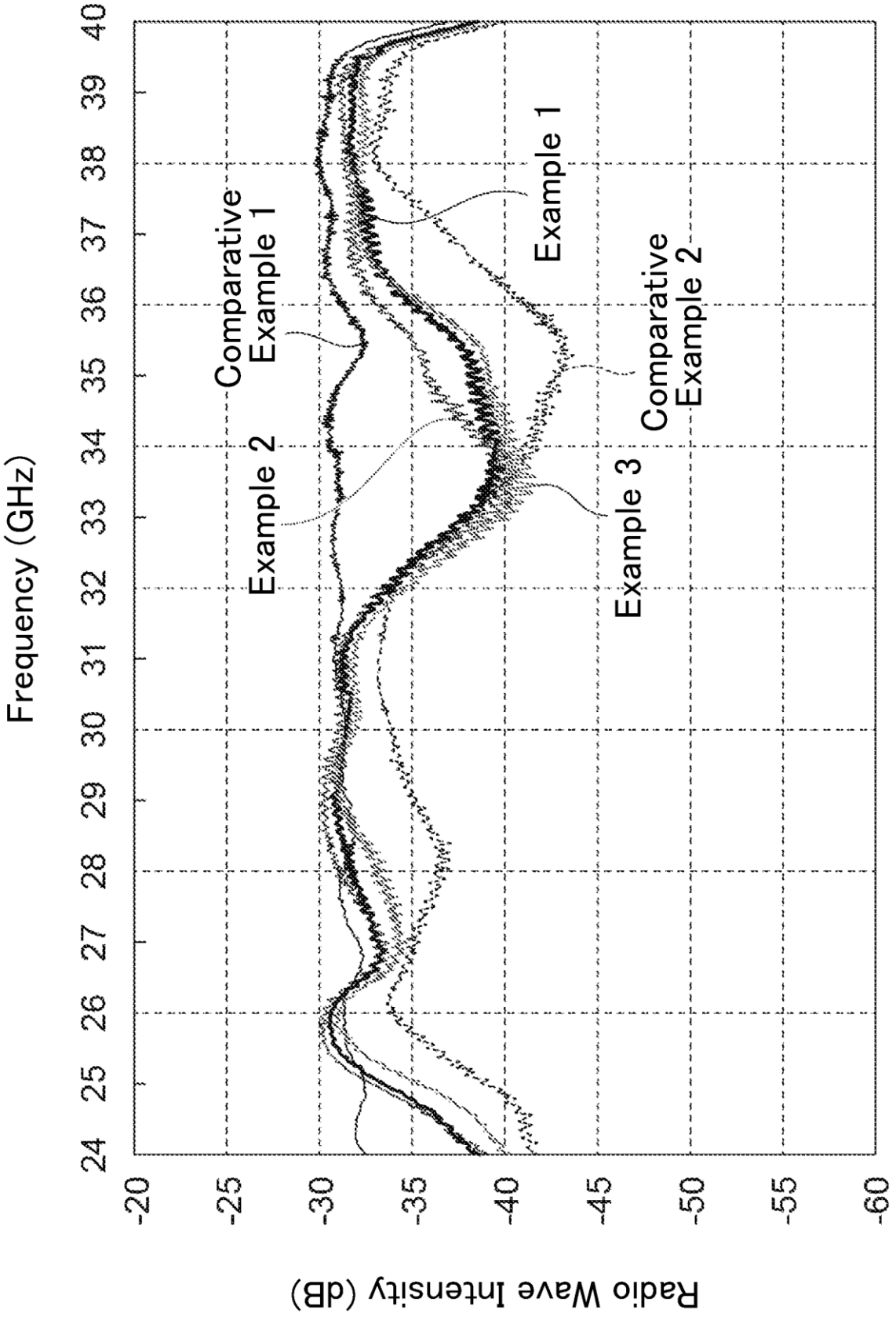
Frequency (GHz)
24
25
26
27
28
29
30
31
32
33
34
35
36
37
38
39
40
Radio Wave Intensity (dB)
-20
-25
-30
-35
-40
-45
-50
-55
-60
Comparative Example 1
Example 2
Example 1
Example 3
Comparative Example 2