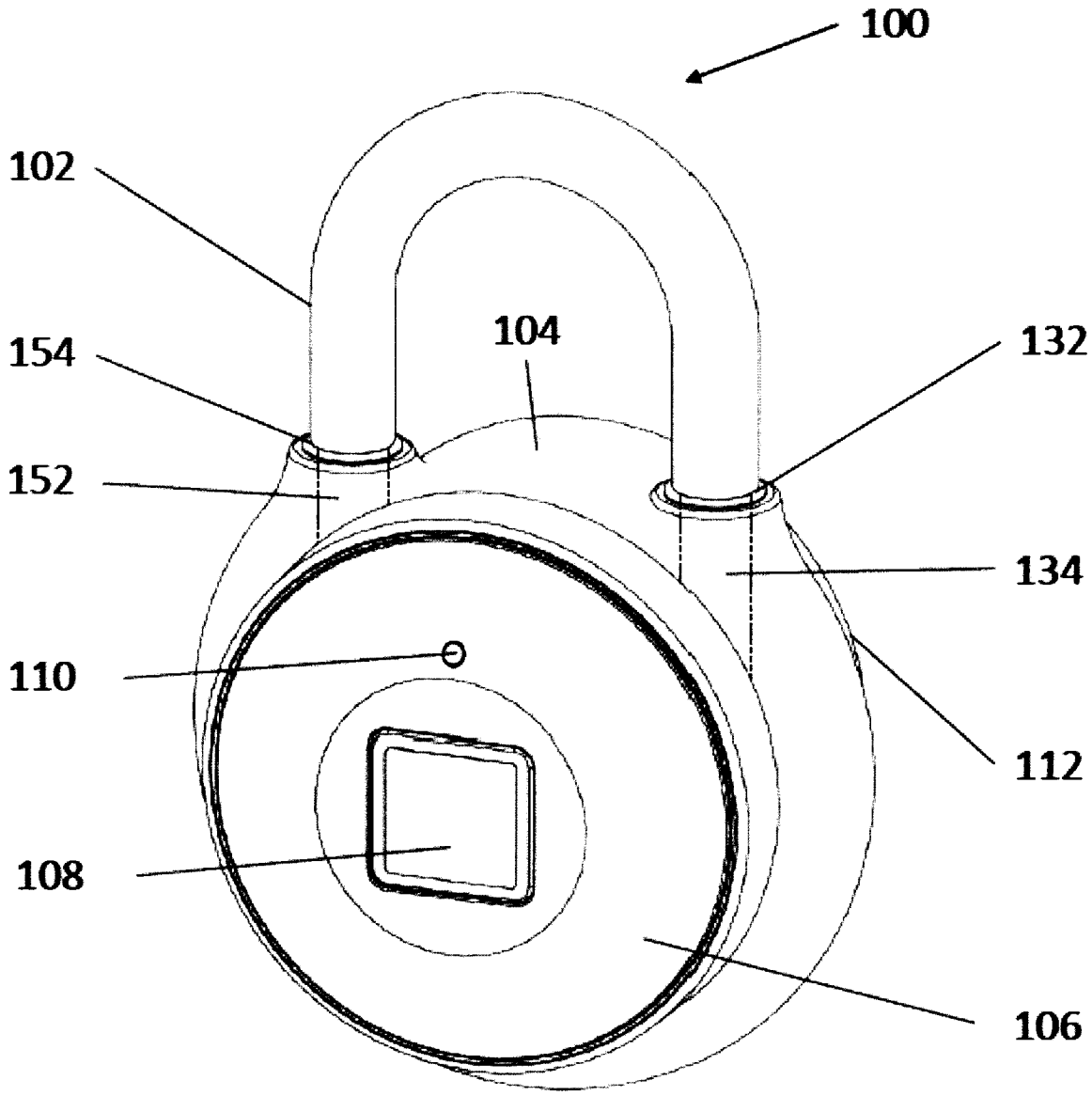

FIG.1

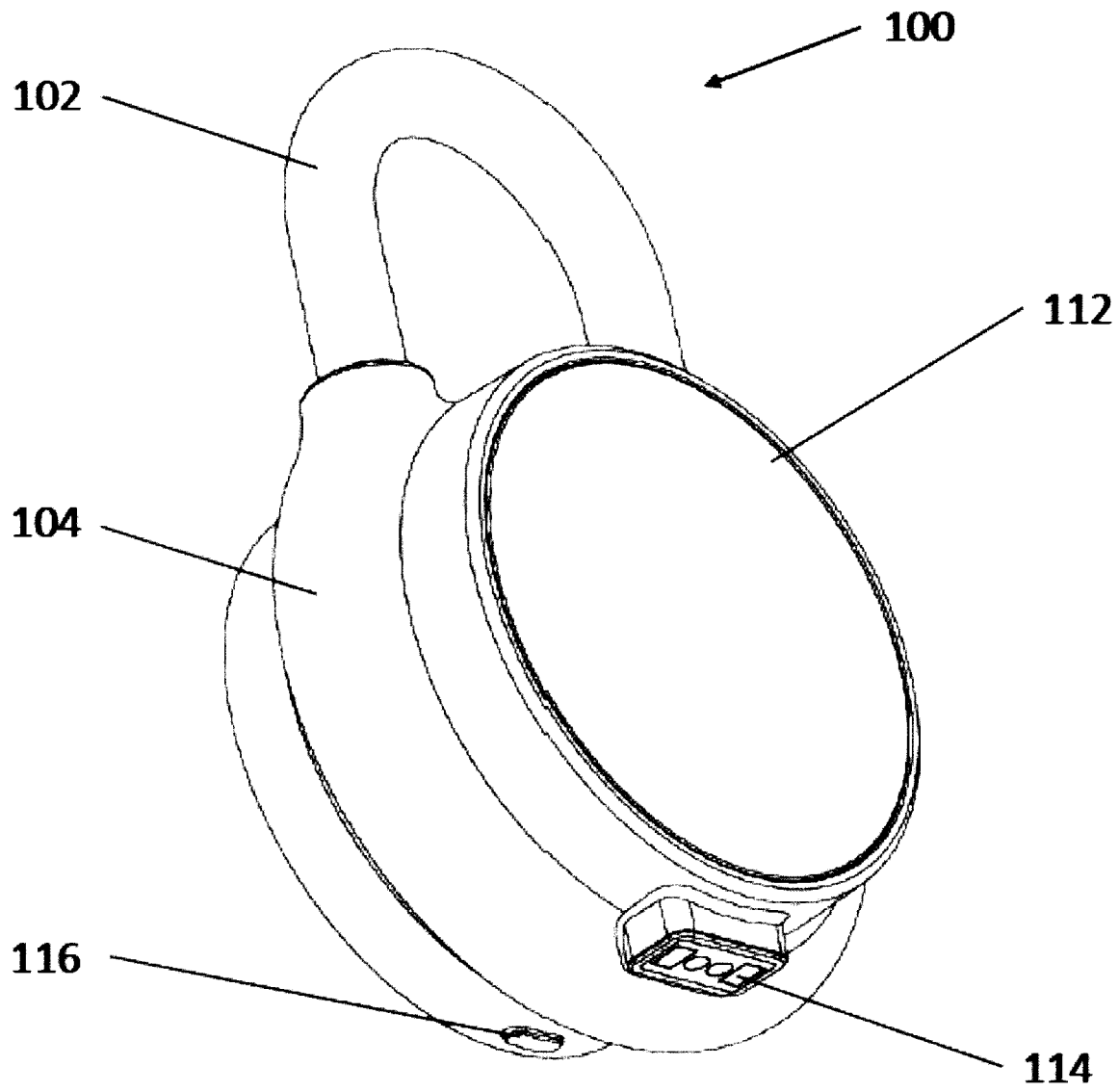

FIG.2

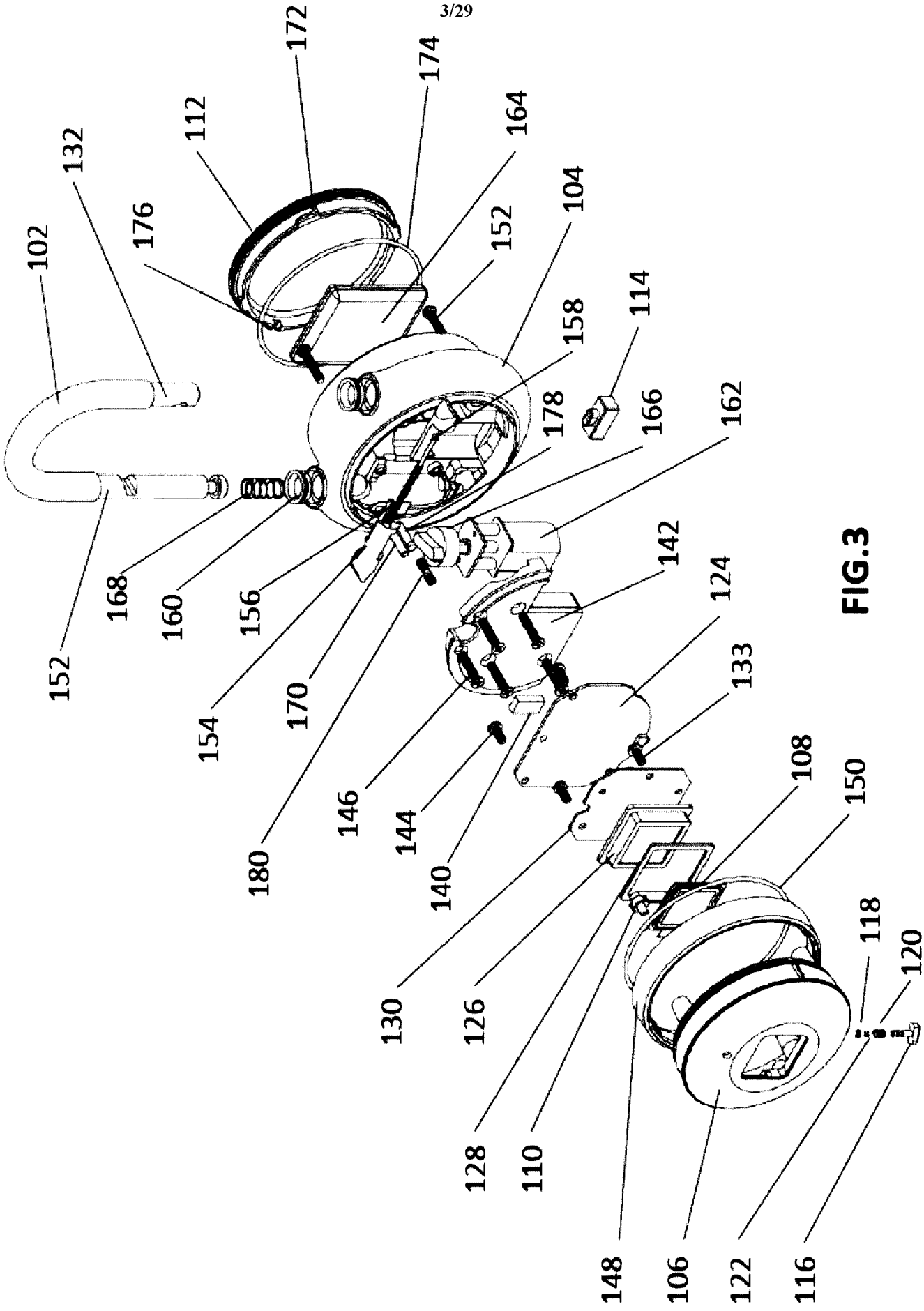
102
132
112
172
174
176
164
152
104
158
114
178
166
162
168
160
156
154
170
180
142
124
133
146
144
140
130
126
128
110
108
150
148
106
122
118
120
116

FIG.3

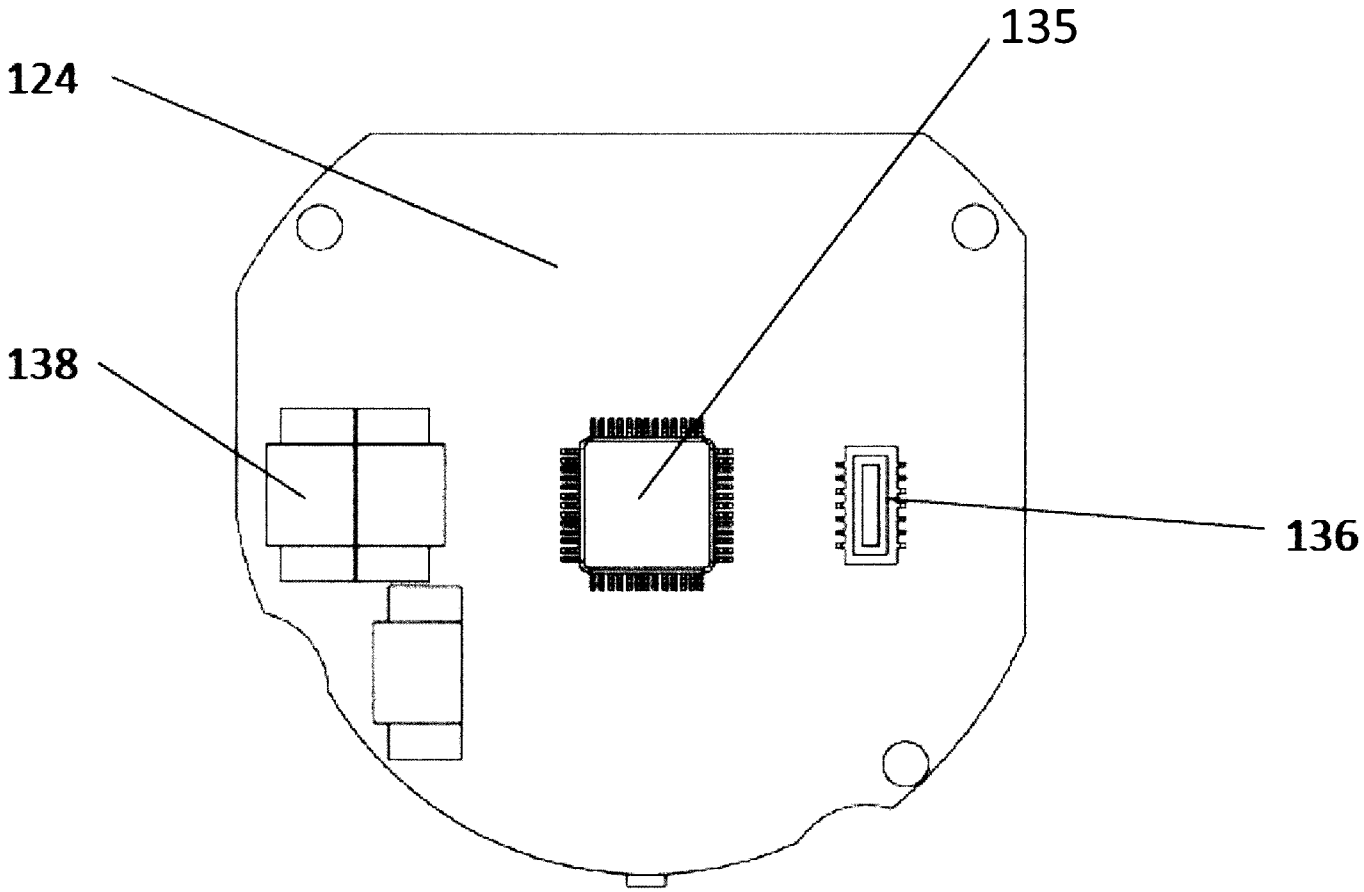

FIG.4

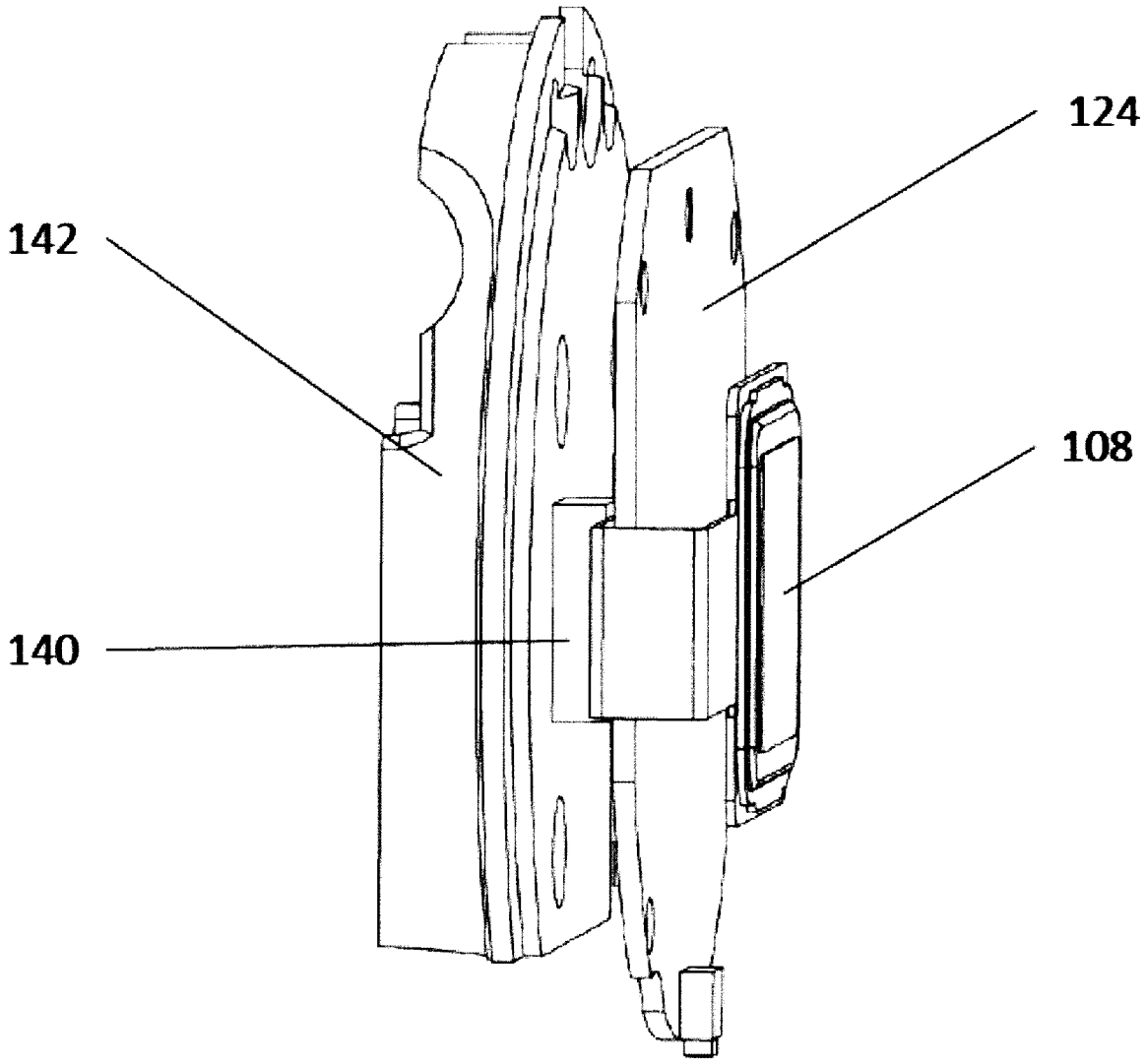

FIG.5

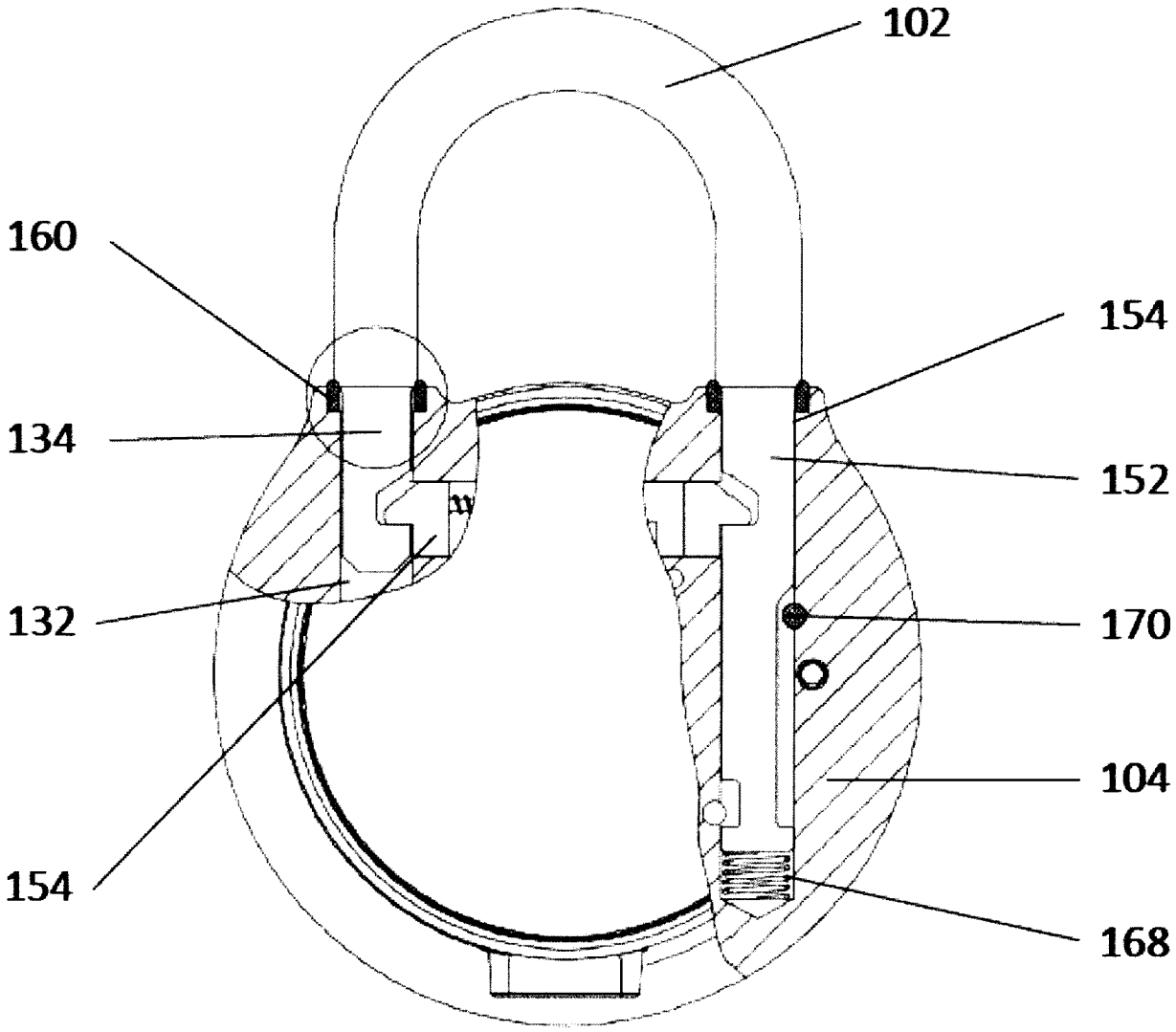

FIG.6

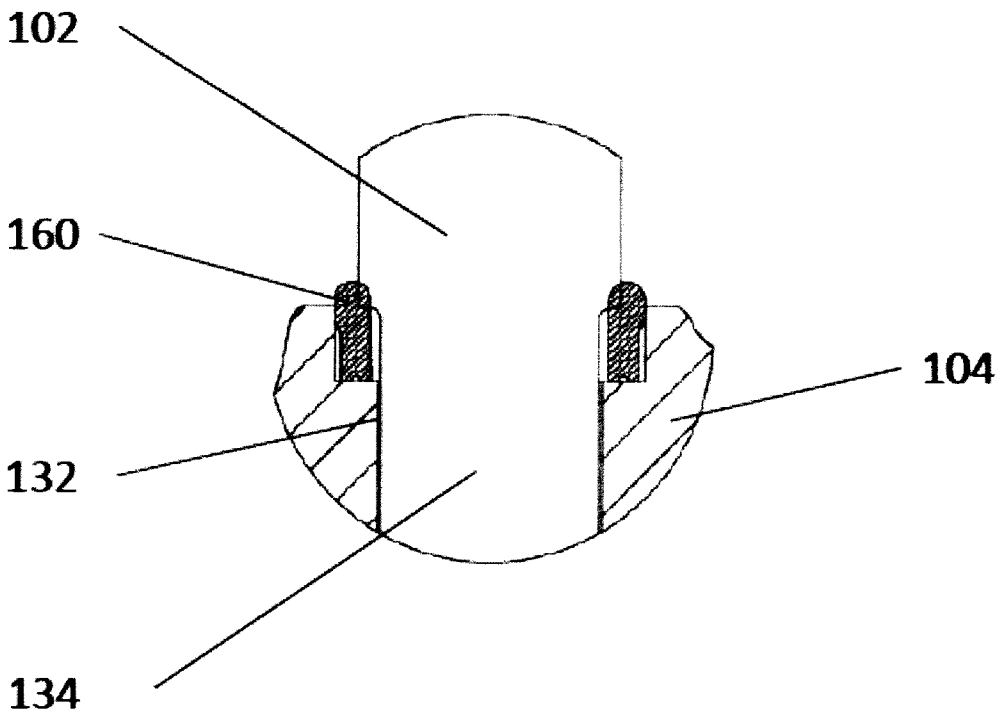

FIG.6A

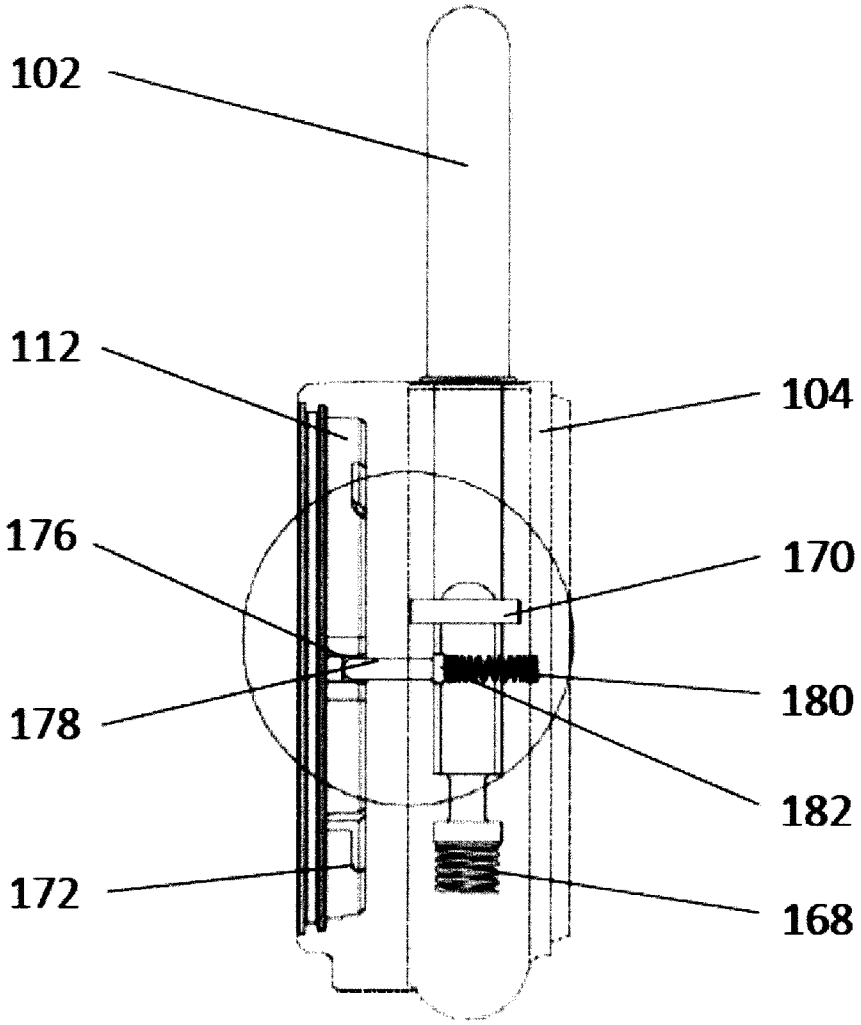

FIG.7

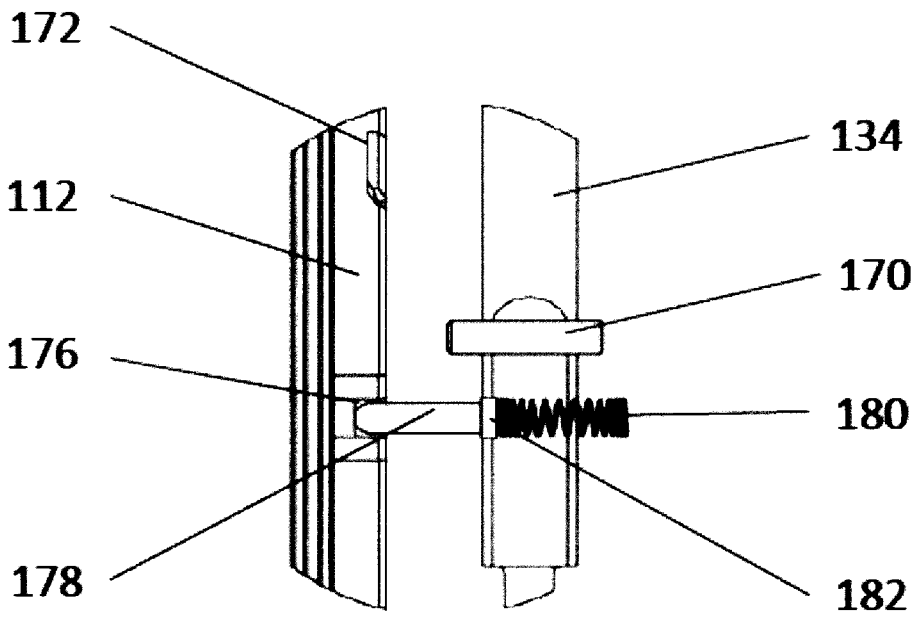

FIG.7A

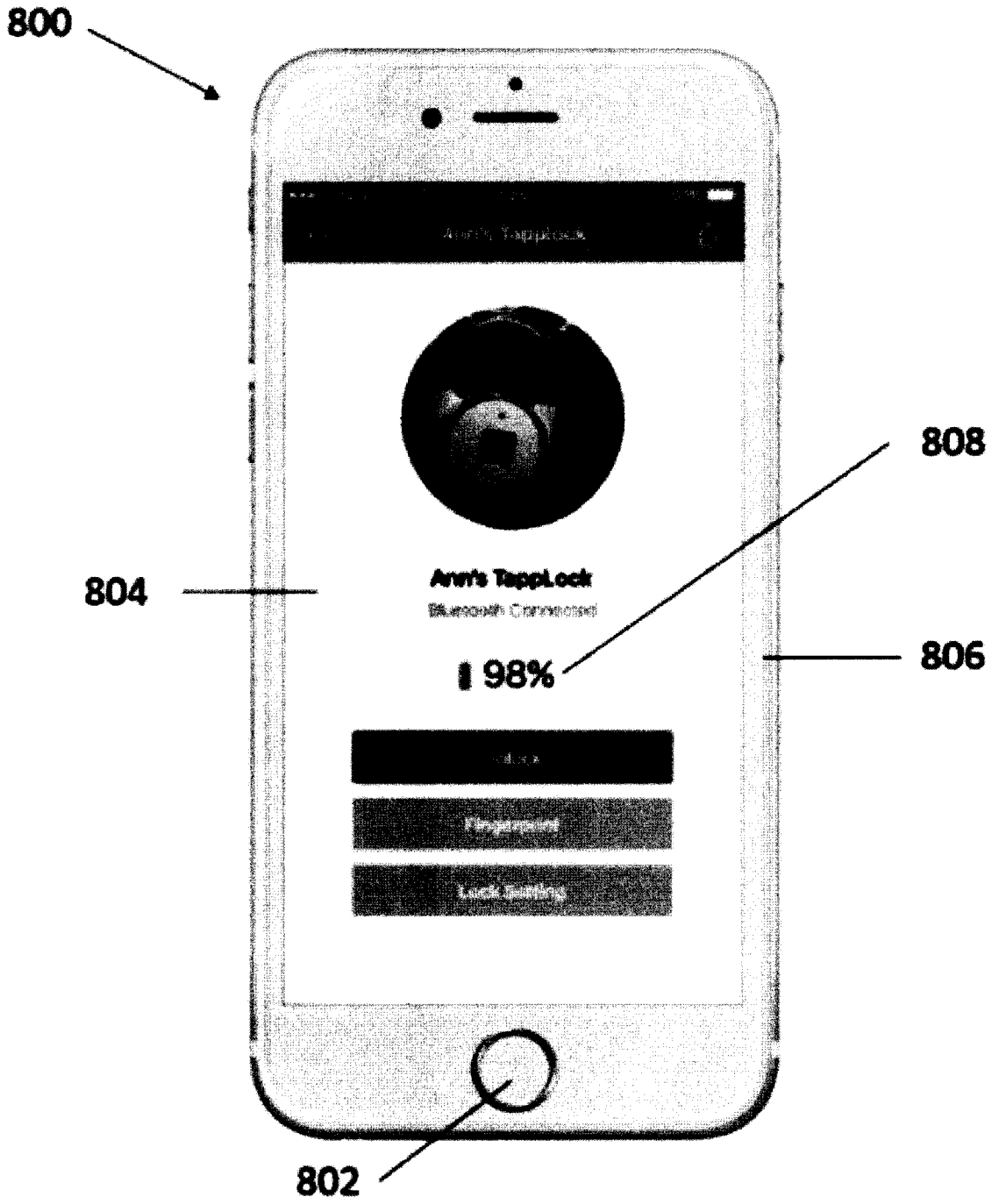

FIG. 8

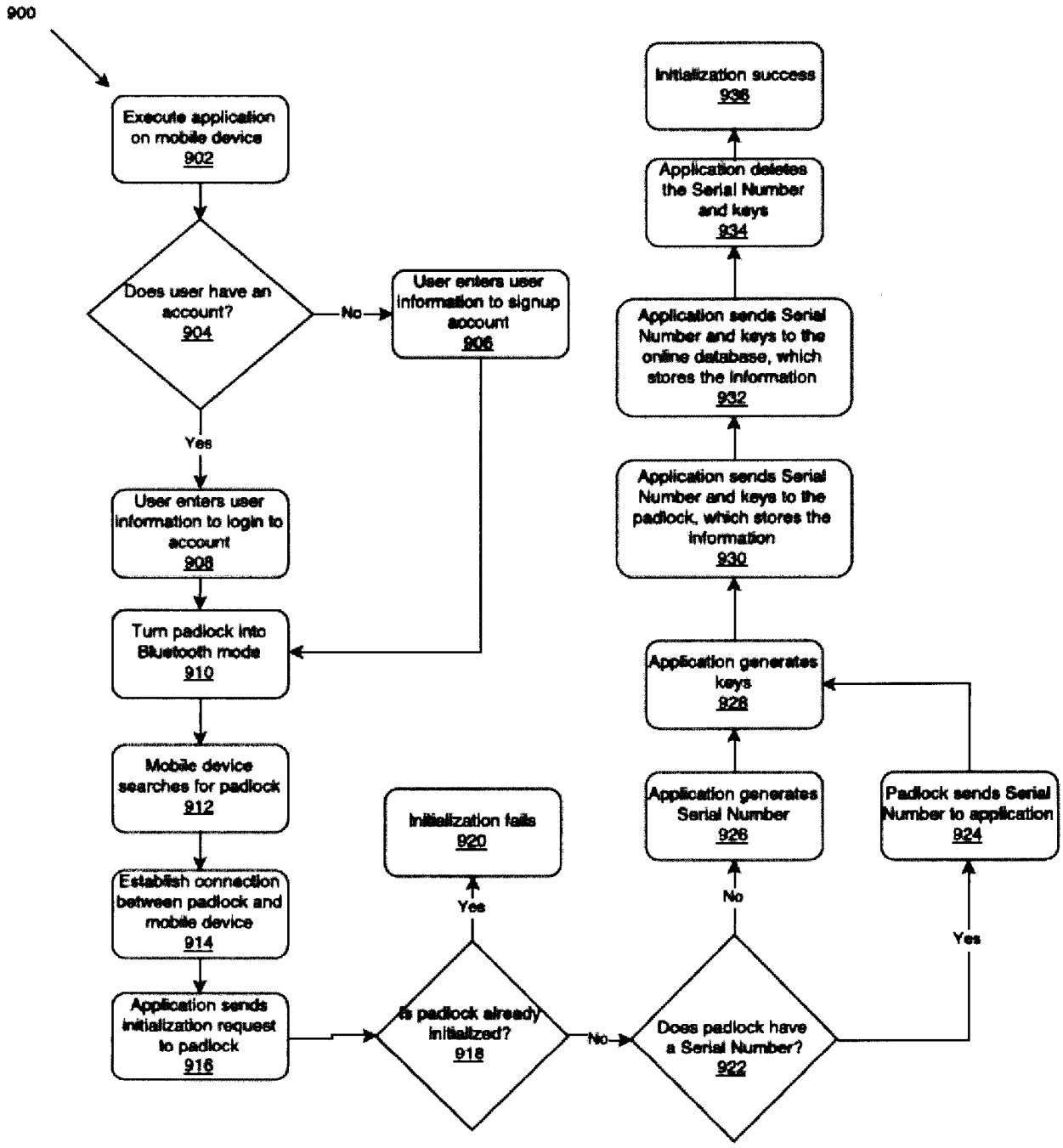
900
Execute application on mobile device 902
Does user have an account? 904
No
User enters user information to signup account 906
Yes
User enters user information to login to account 908
Turn padlock into Bluetooth mode 910
Mobile device searches for padlock 912
Establish connection between padlock and mobile device 914
Application sends initialization request to padlock 916
Is padlock already initialized? 918
Yes
Initialization fails 920
No
Does padlock have a Serial Number? 922
Yes
Padlock sends Serial Number to application 924
No
Application generates Serial Number 926
Application generates keys 928
Application sends Serial Number and keys to the padlock, which stores the information 930
Application sends Serial Number and keys to the online database, which stores the information 932
Application deletes the Serial Number and keys 934
Initialization success 936

FIG.9

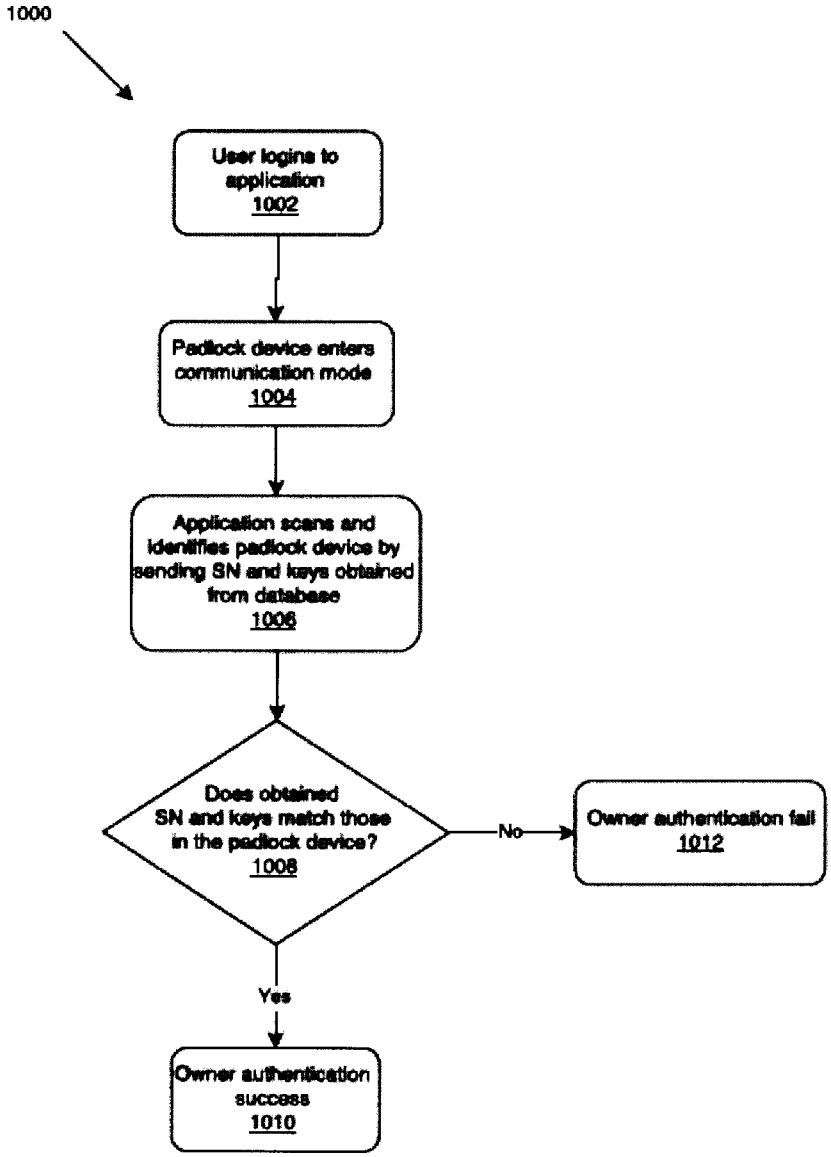
1000
User logins to application 1002
Padlock device enters communication mode 1004
Application scans and identifies padlock device by sending SN and keys obtained from database 1006
Does obtained SN and keys match those in the padlock device? 1008
No
Owner authentication fail 1012
Yes
Owner authentication success 1010

FIG.10

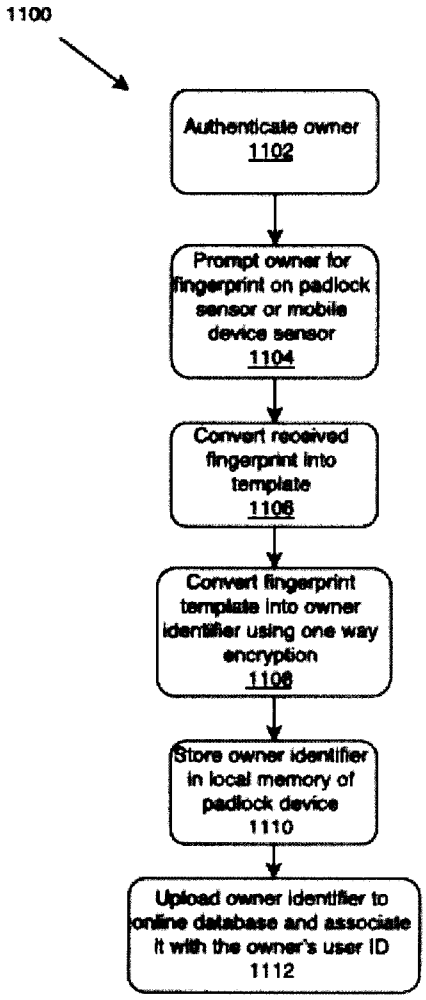
1100
Authenticate owner
1102
Prompt owner for fingerprint on padlock sensor or mobile device sensor
1104
Convert received fingerprint into template
1106
Convert fingerprint template into owner identifier using one way encryption
1108
Store owner identifier in local memory of padlock device
1110
Upload owner identifier to online database and associate it with the owner's user ID
1112

FIG.11

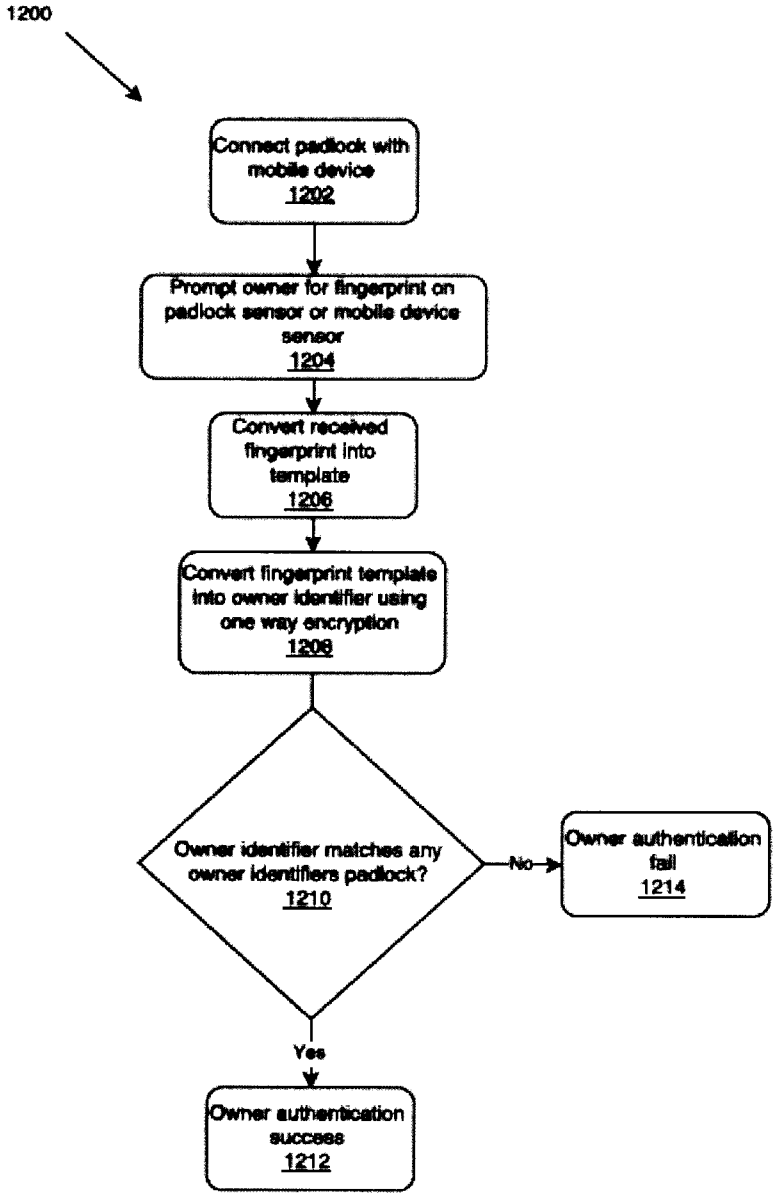
1200
Connect padlock with mobile device
1202
Prompt owner for fingerprint on padlock sensor or mobile device sensor
1204
Convert received fingerprint into template
1206
Convert fingerprint template into owner identifier using one way encryption
1208
Owner identifier matches any owner identifiers padlock?
1210
No
Owner authentication fail
1214
Yes
Owner authentication success
1212

FIG.12

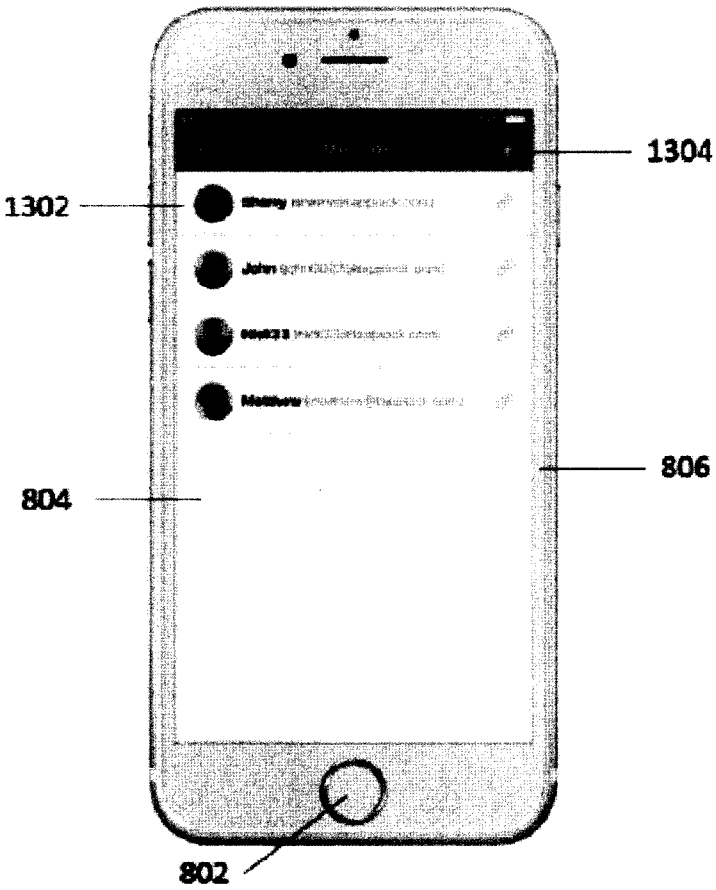

FIG.13

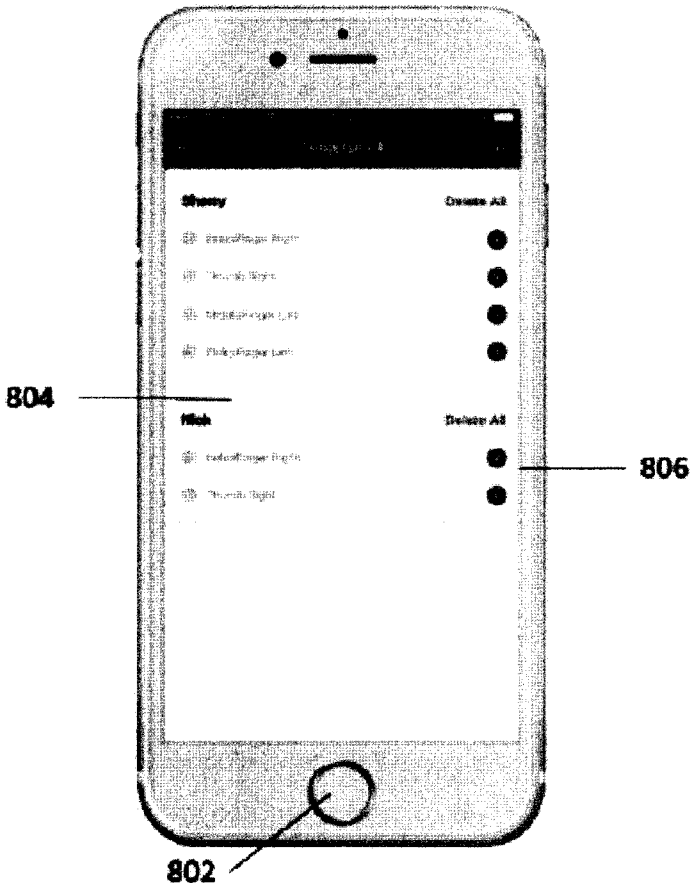

FIG.13A

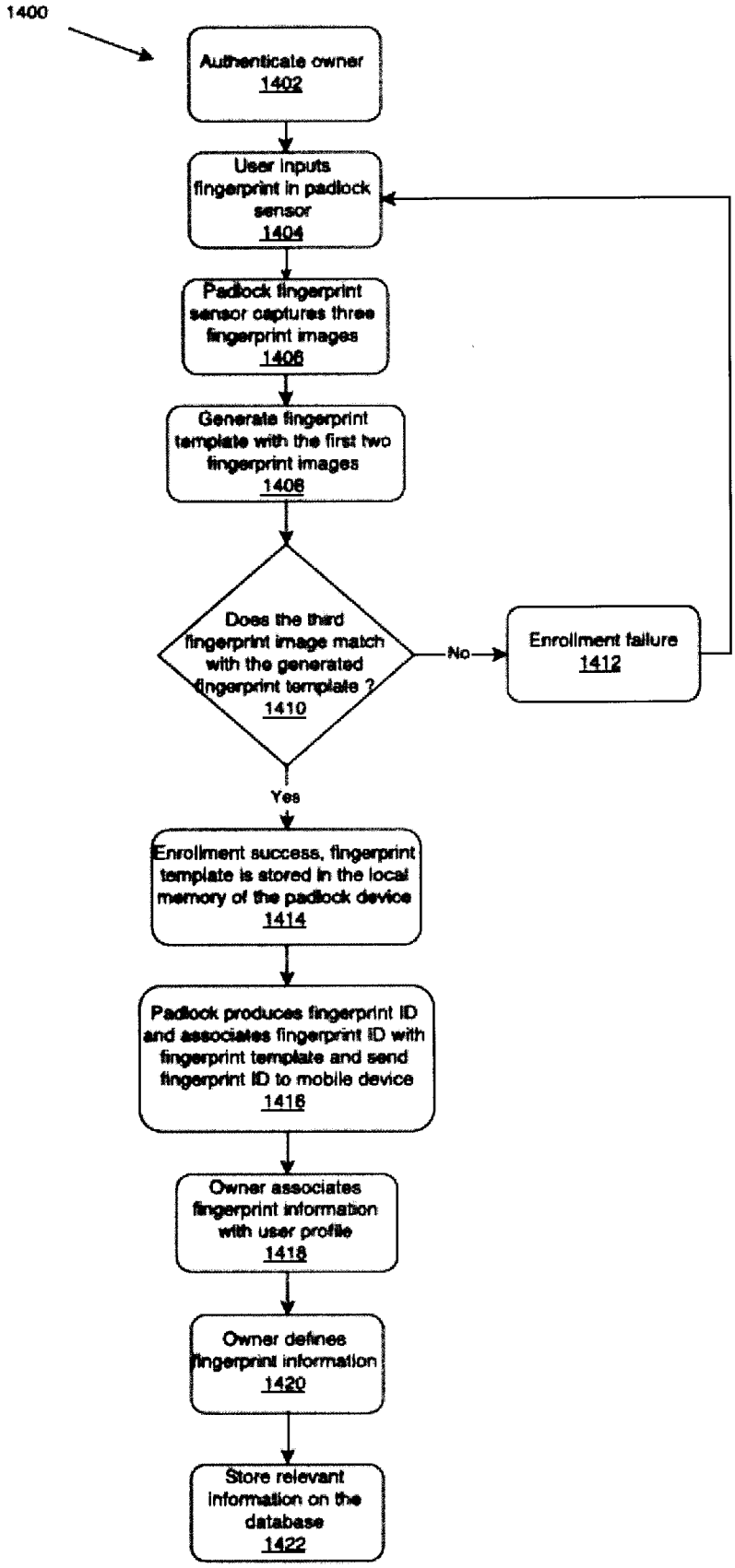
1400
Authenticate owner
1402
User inputs fingerprint in padlock sensor
1404
Padlock fingerprint sensor captures three fingerprint images
1406
Generate fingerprint template with the first two fingerprint images
1408
Does the third fingerprint image match with the generated fingerprint template ?
1410
No
Enrollment failure
1412
Yes
Enrollment success, fingerprint template is stored in the local memory of the padlock device
1414
Padlock produces fingerprint ID and associates fingerprint ID with fingerprint template and send fingerprint ID to mobile device
1416
Owner associates fingerprint information with user profile
1418
Owner defines fingerprint information
1420
Store relevant information on the database
1422

FIG.14

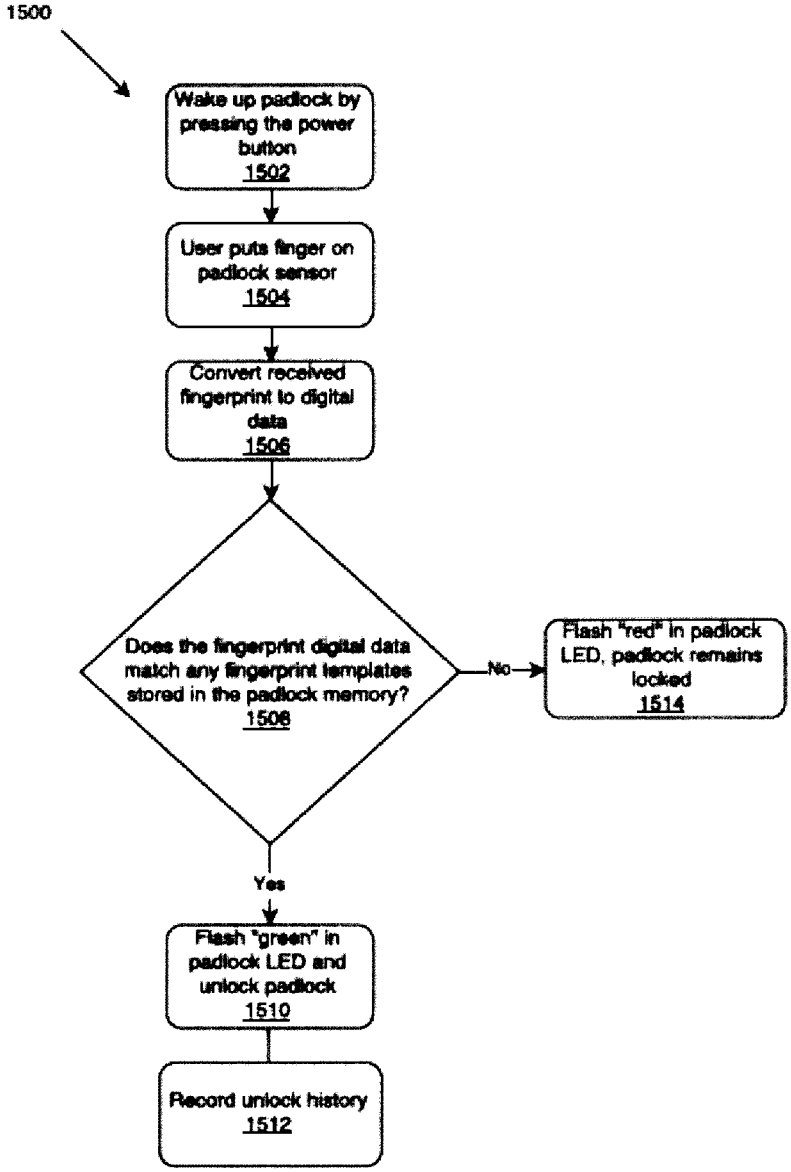
1500
Wake up padlock by pressing the power button
1502
User puts finger on padlock sensor
1504
Convert received fingerprint to digital data
1506
Does the fingerprint digital data match any fingerprint templates stored in the padlock memory?
1508
No
Flash "red" in padlock LED, padlock remains locked
1514
Yes
Flash "green" in padlock LED and unlock padlock
1510
Record unlock history
1512

FIG.15

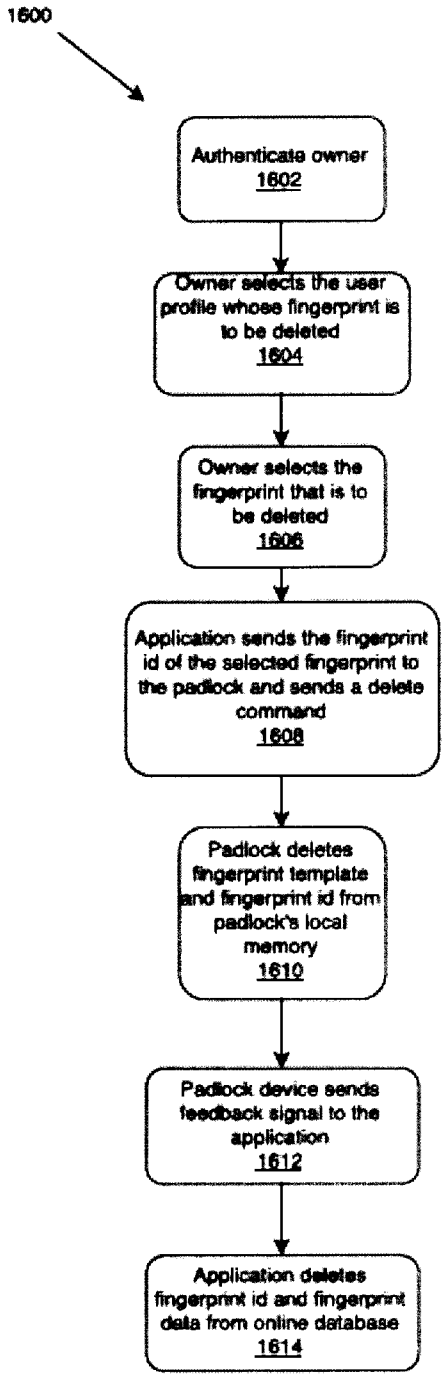
1600
Authenticate owner
1602
Owner selects the user profile whose fingerprint is to be deleted
1604
Owner selects the fingerprint that is to be deleted
1606
Application sends the fingerprint id of the selected fingerprint to the padlock and sends a delete command
1608
Padlock deletes fingerprint template and fingerprint id from padlock's local memory
1610
Padlock device sends feedback signal to the application
1612
Application deletes fingerprint id and fingerprint data from online database
1614

FIG.16

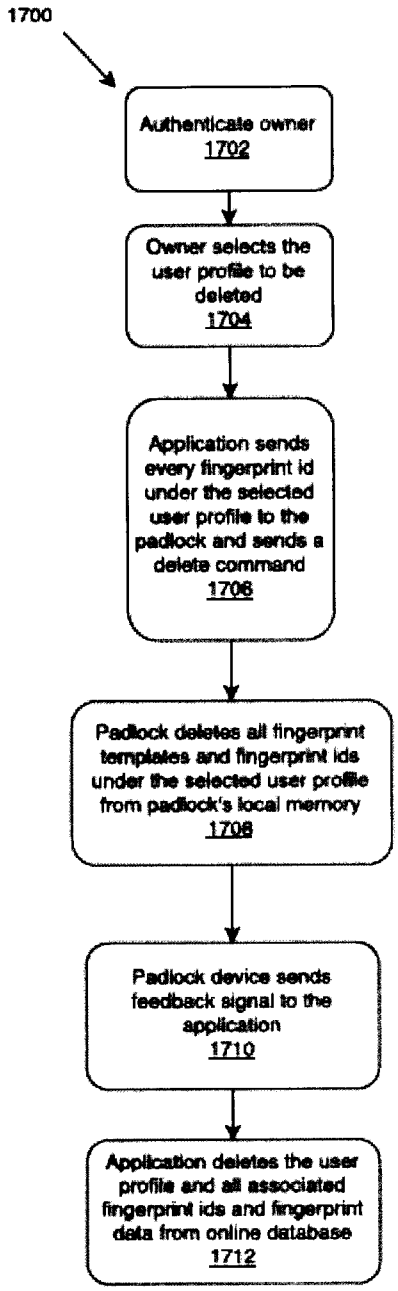
1700
Authenticate owner
1702
Owner selects the user profile to be deleted
1704
Application sends every fingerprint id under the selected user profile to the padlock and sends a delete command
1706
Padlock deletes all fingerprint templates and fingerprint ids under the selected user profile from padlock's local memory
1708
Padlock device sends feedback signal to the application
1710
Application deletes the user profile and all associated fingerprint ids and fingerprint data from online database
1712

FIG.17

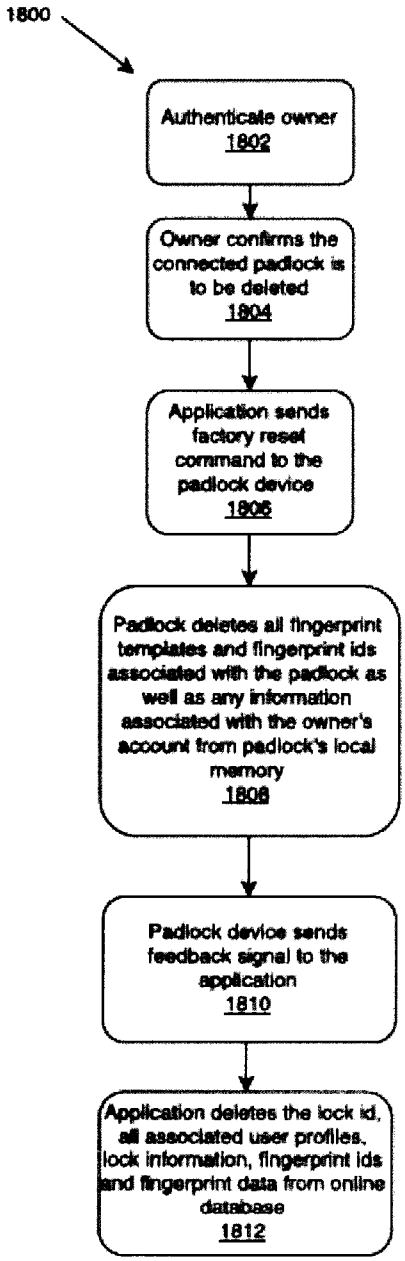
1800
Authenticate owner
1802
Owner confirms the connected padlock is to be deleted
1804
Application sends factory reset command to the padlock device
1806
Padlock deletes all fingerprint templates and fingerprint ids associated with the padlock as well as any information associated with the owner's account from padlock's local memory
1808
Padlock device sends feedback signal to the application
1810
Application deletes the lock id, all associated user profiles, lock information, fingerprint ids and fingerprint data from online database
1812

FIG.18

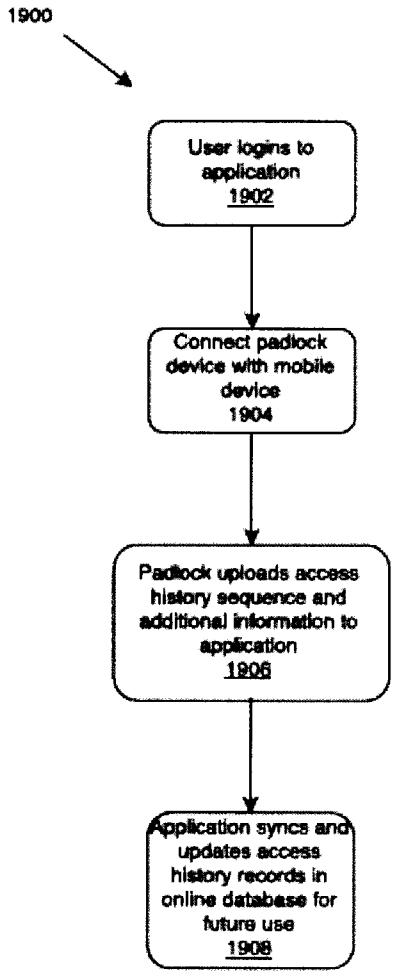
1900
User logins to application 1902
Connect padlock device with mobile device 1904
Padlock uploads access history sequence and additional information to application 1906
Application syncs and updates access history records in online database for future use 1908

FIG.19

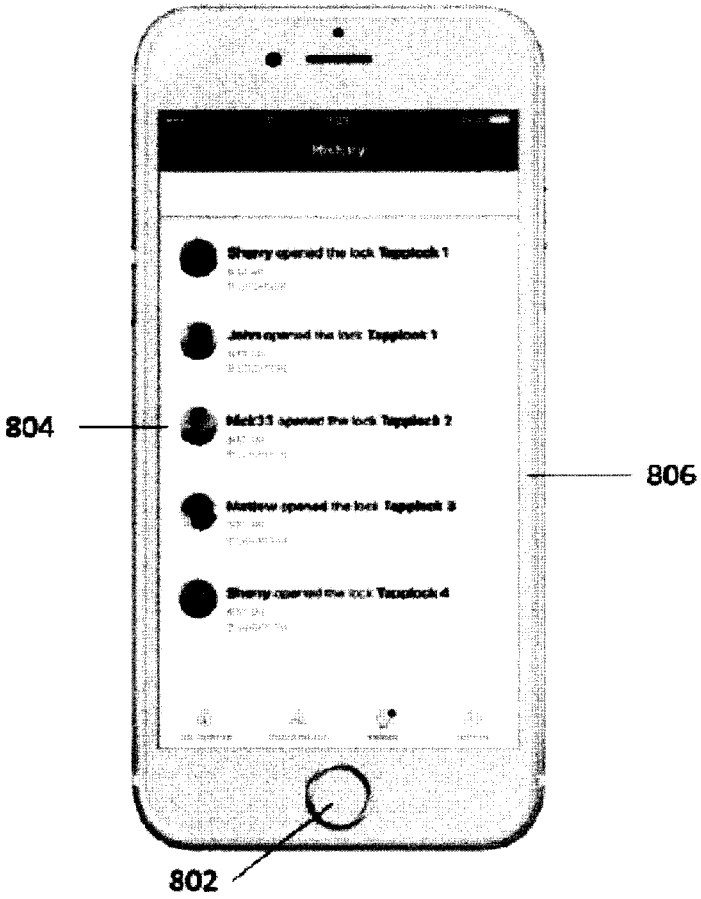

FIG.20

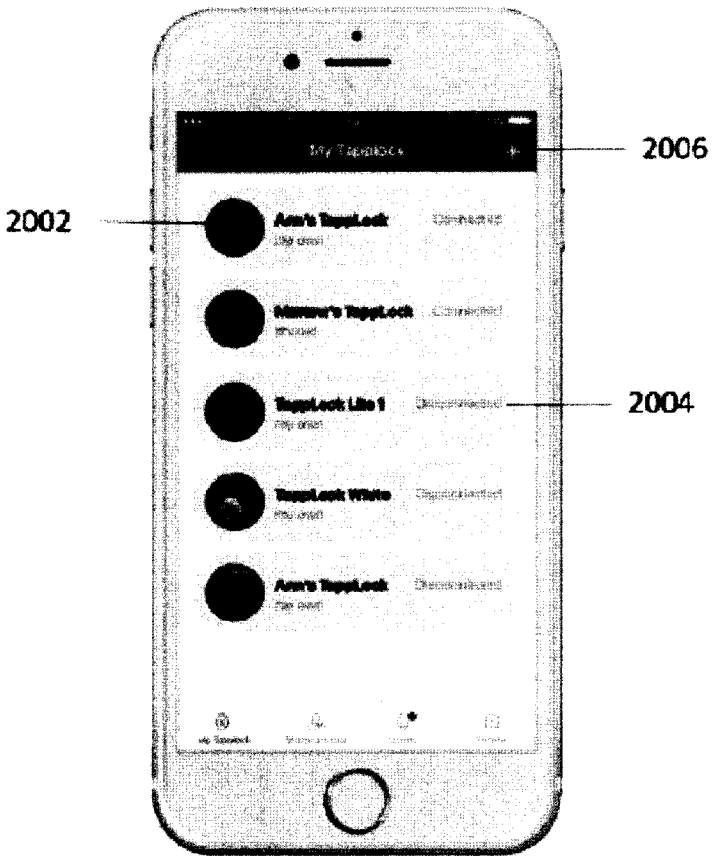

FIG.20A

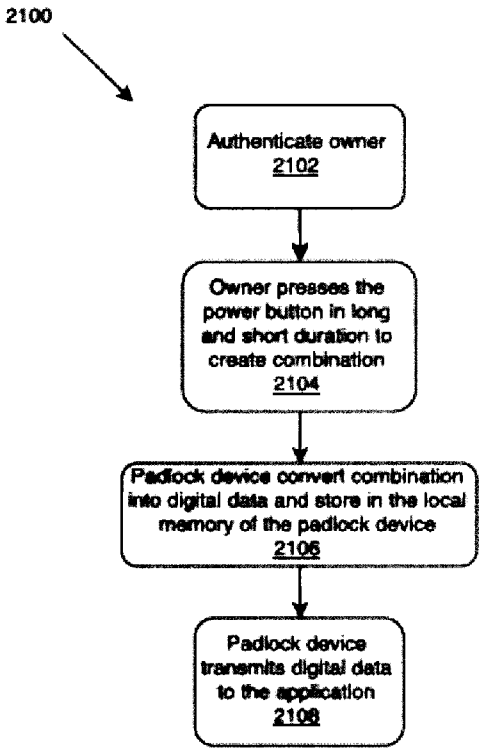
2100
Authenticate owner
2102
Owner presses the power button in long and short duration to create combination
2104
Padlock device convert combination into digital data and store in the local memory of the padlock device
2106
Padlock device transmits digital data to the application
2108

FIG.21

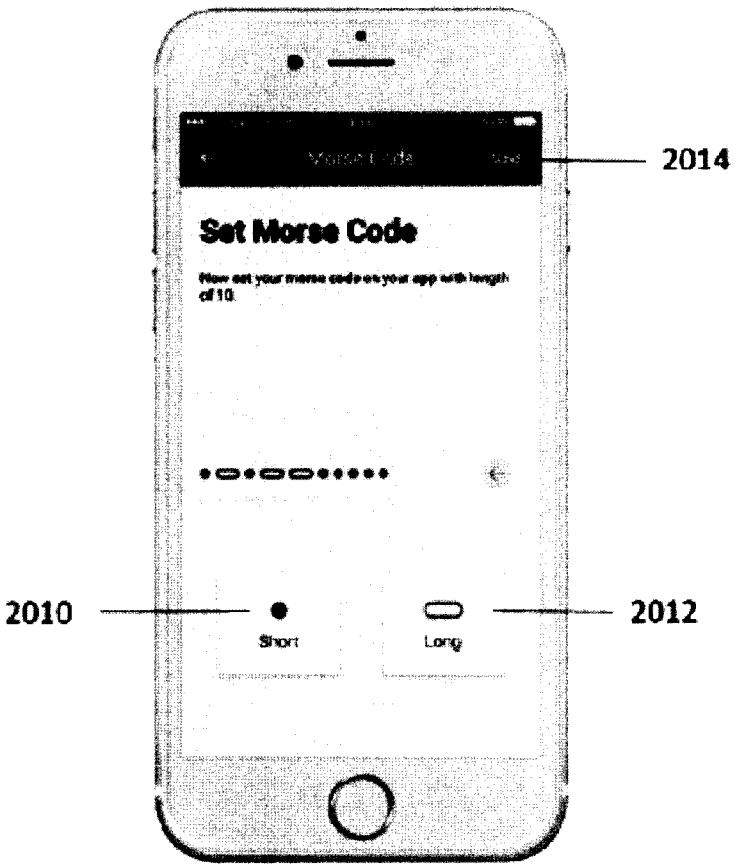

FIG.21A

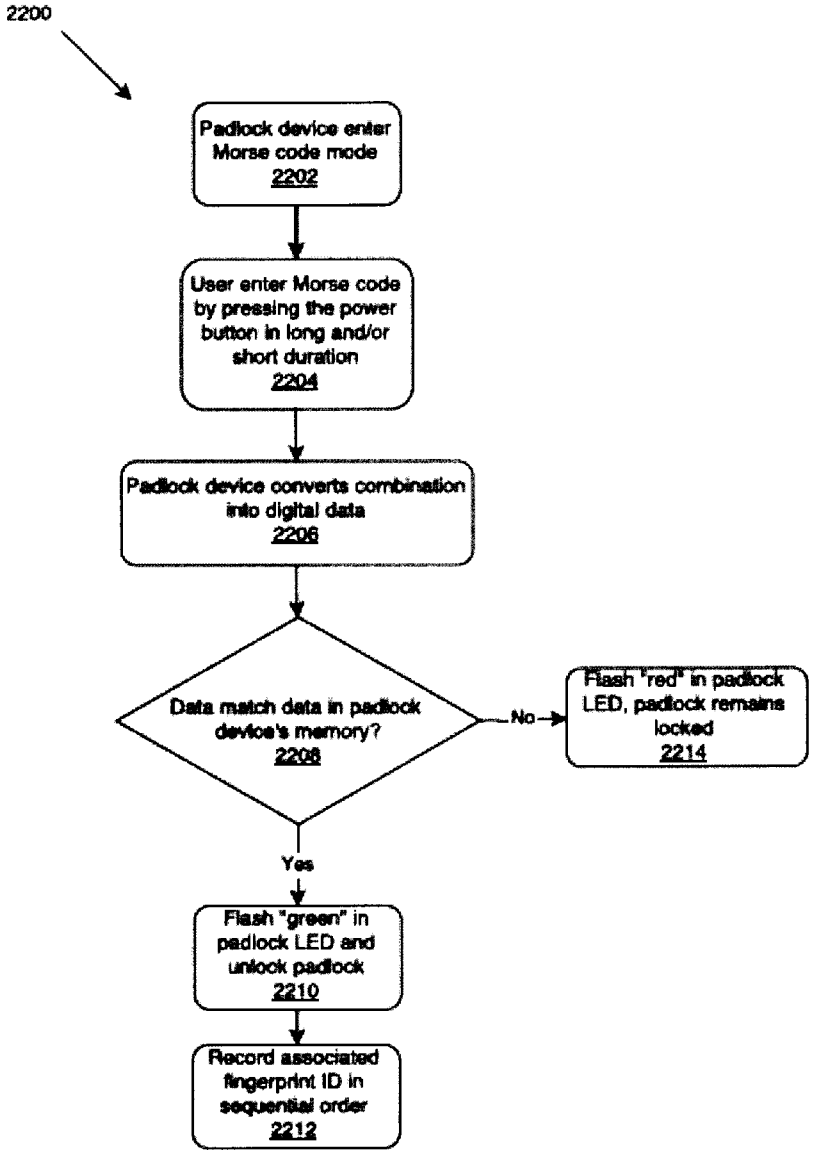
2200
Padlock device enter Morse code mode
2202
User enter Morse code by pressing the power button in long and/or short duration
2204
Padlock device converts combination into digital data
2206
Data match data in padlock device's memory?
2208
No
Flash "red" in padlock LED, padlock remains locked
2214
Yes
Flash "green" in padlock LED and unlock padlock
2210
Record associated fingerprint ID in sequential order
2212

FIG.22

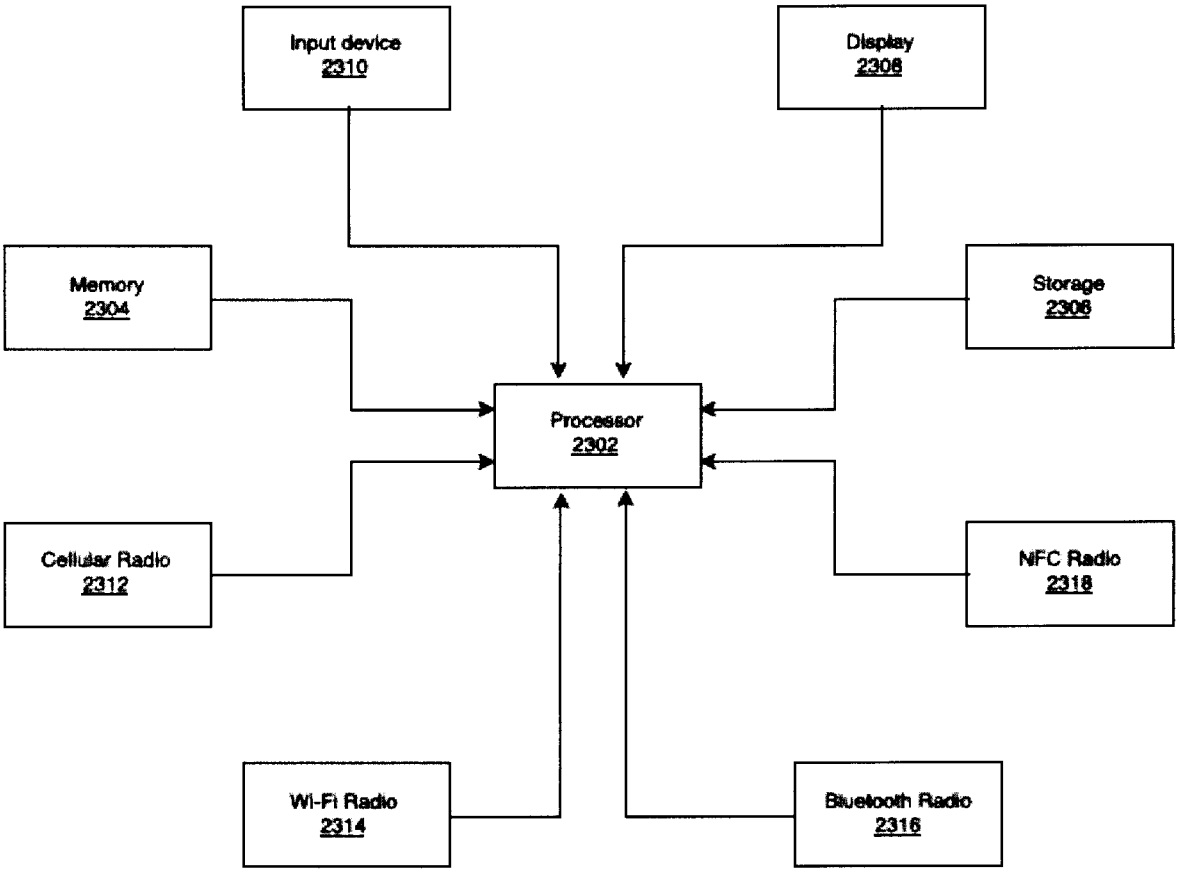
Input device
2310
Display
2308
Memory
2304
Storage
2306
Processor
2302
Cellular Radio
2312
NFC Radio
2318
Wi-Fi Radio
2314
Bluetooth Radio
2316

FIG.23

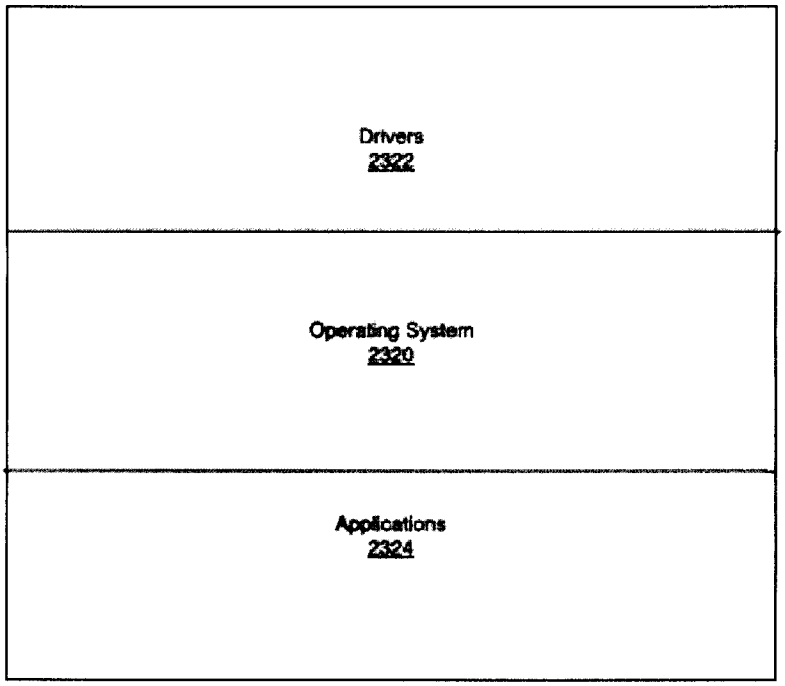

FIG.24