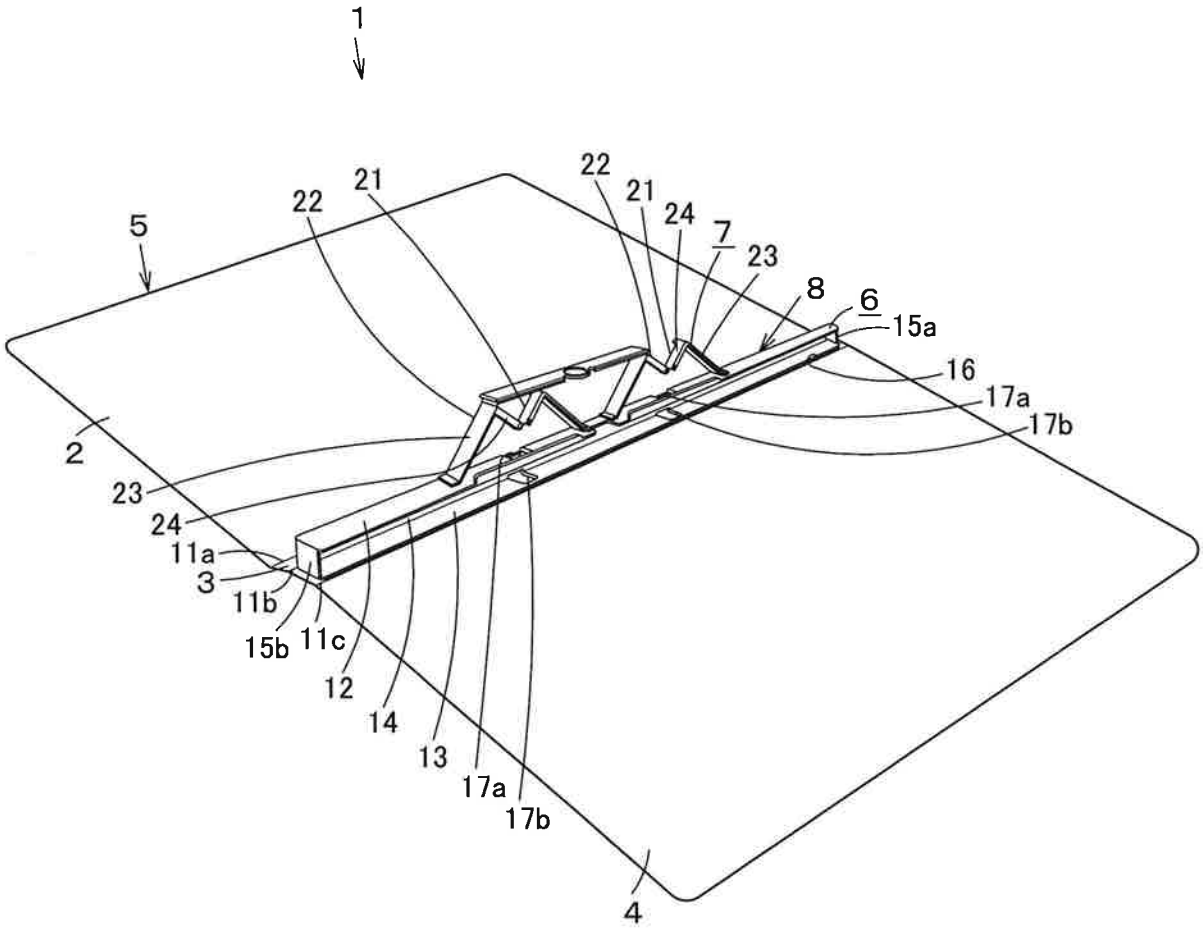
1
5
22
21
22
21
24
7
23
8
6
15a
16
17a
17b
2
23
24
11a
3
11b
15b
11c
12
14
13
17a
17b
4

FIG. 1

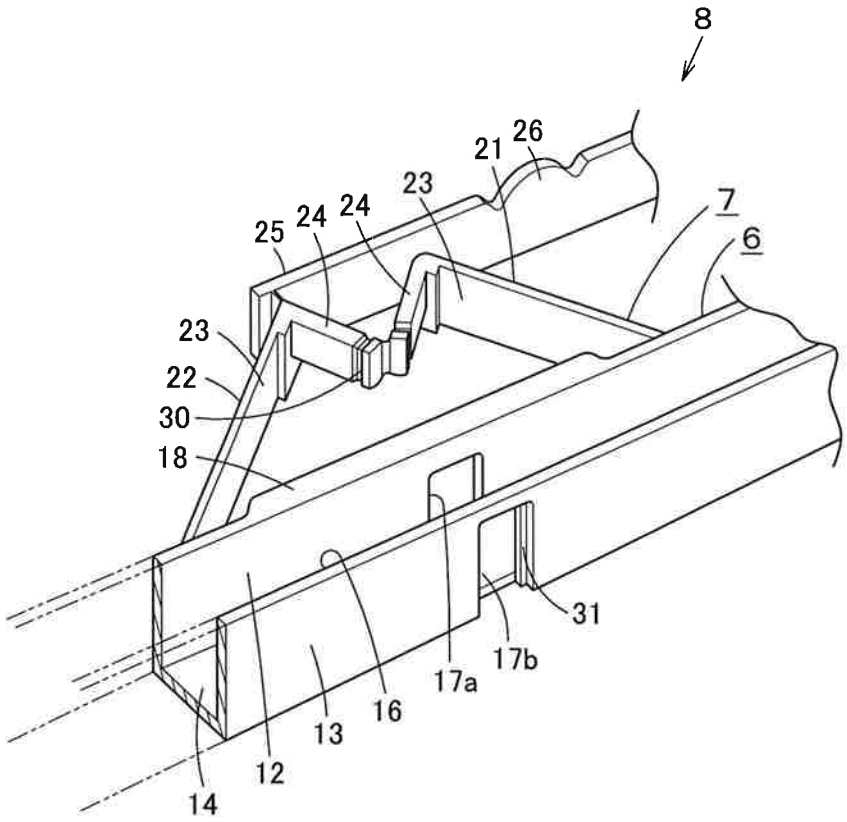
8
26
21
23
24
24
25
7
6
23
22
30
18
31
17b
17a
16
13
12
14

FIG. 2

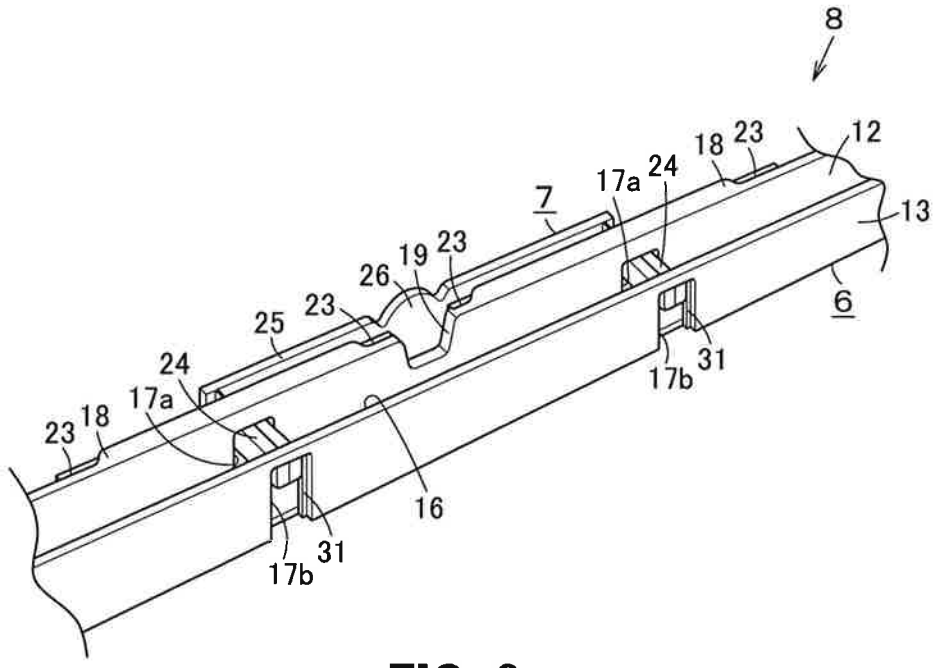
8
12
18
23
17a
24
7
13
19
23
26
23
25
6
24
17a
18
23
17b
31
16
31
17b

FIG. 3

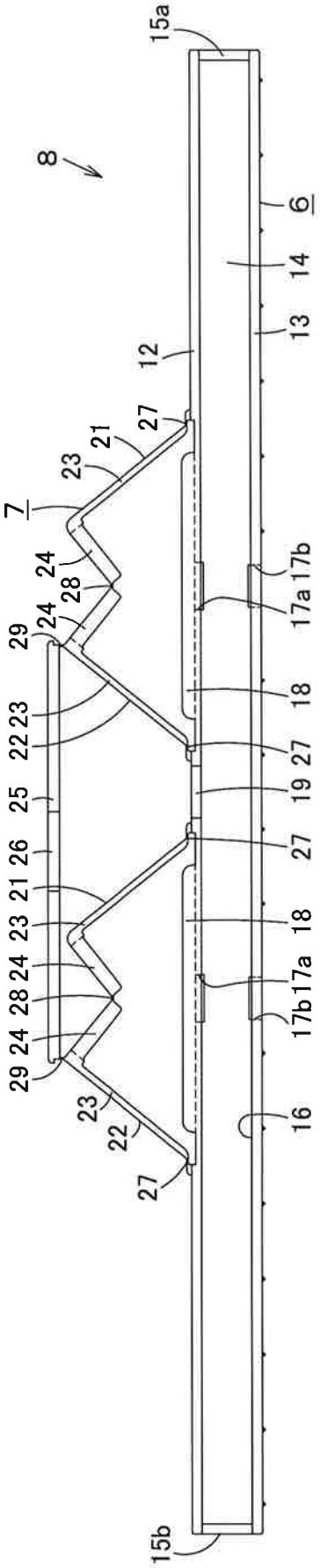
15a
8
6
14
13
12
27
21
23
7
24
28
24
29
23
22
25
26
21
23
24
28
24
29
23
22
27
15b
16
17b
17a
18
27
19
27
18
17a
17b

FIG. 4

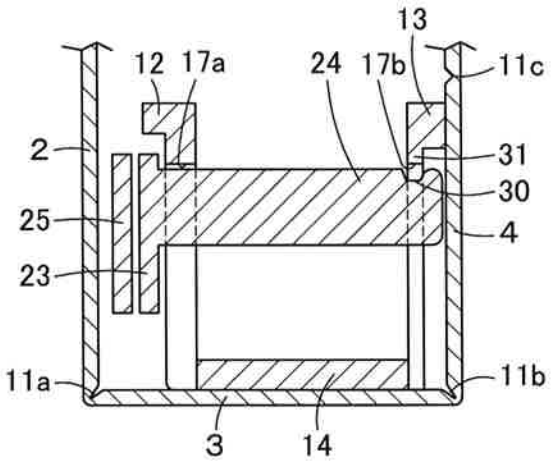

FIG. 5

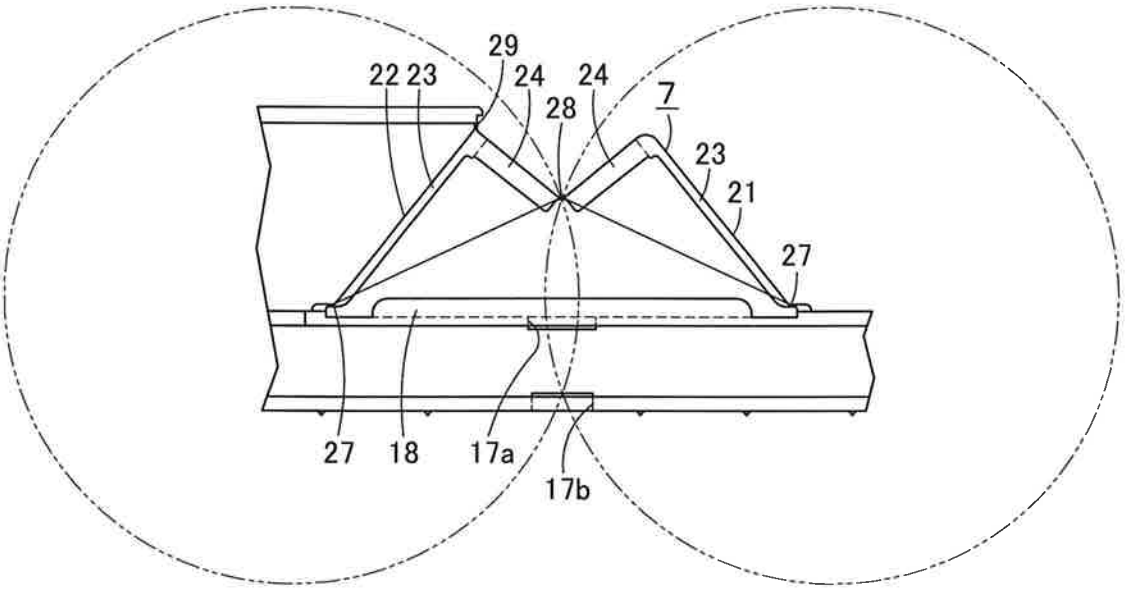
29
22 23
24
24
28
7
23
21
27
27
18
17a
17b

(a)

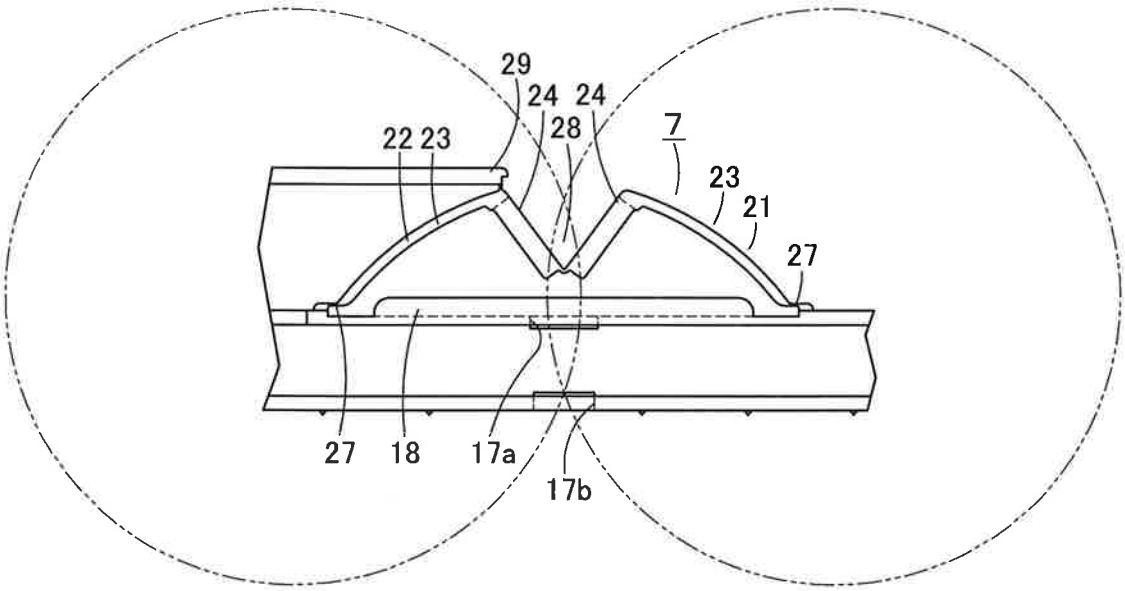
29
24
24
22 23
28
7
23
21
27
27
18
17a
17b

(b)

FIG. 6

(a)

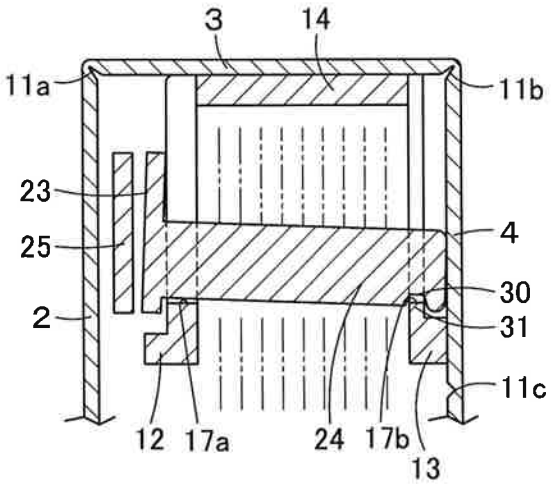
3
14
11a
11b
23
25
4
30
2
31
11c
12
17a
24
17b
13

(b)

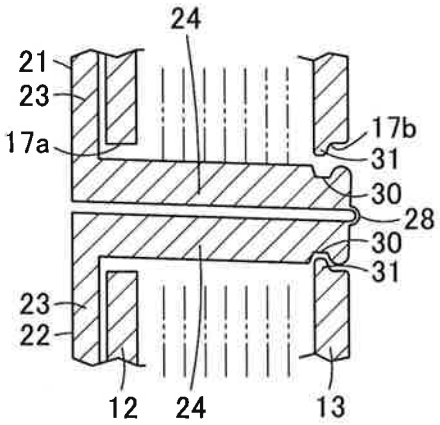
24
21
23
17a
17b
31
30
28
30
31
23
22
12
24
13

(c)

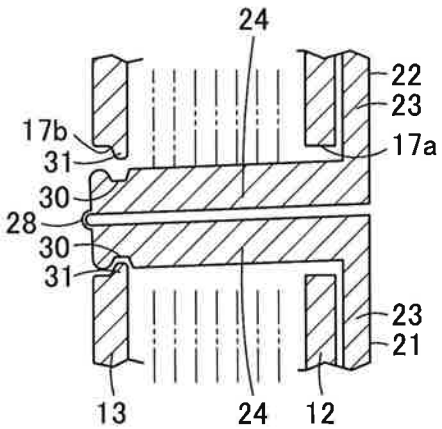
24
22
23
17b
31
17a
30
28
30
31
23
21
13
24
12

FIG. 7

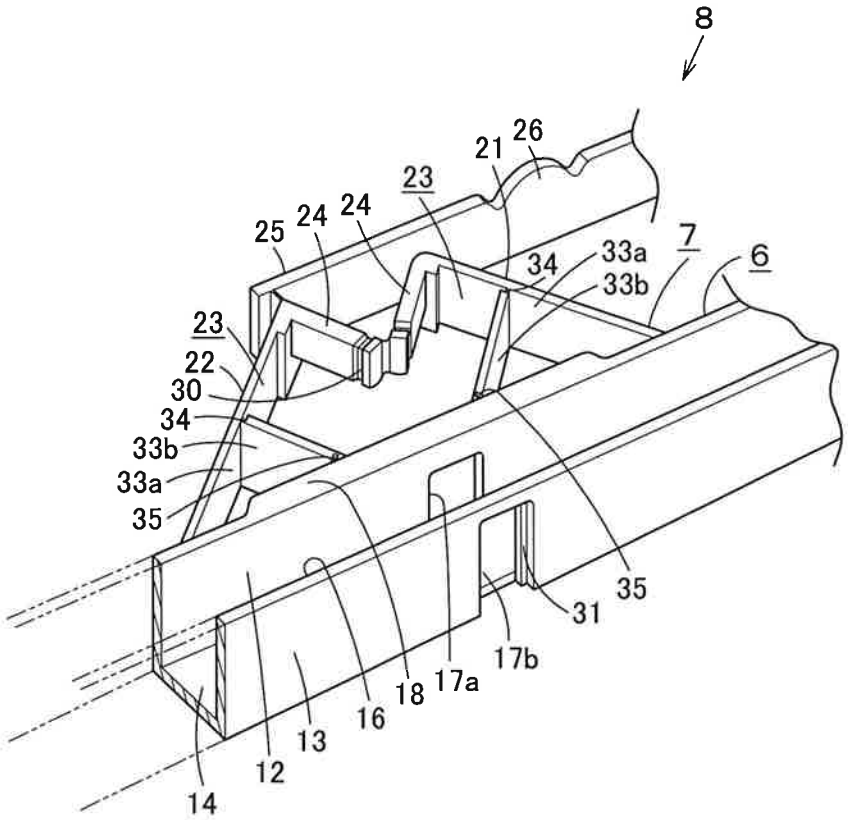
8
21
26
23
25
24
24
7
6
34
33a
33b
23
22
30
34
33b
33a
35
35
31
17b
17a
18
16
13
12
14

(a)

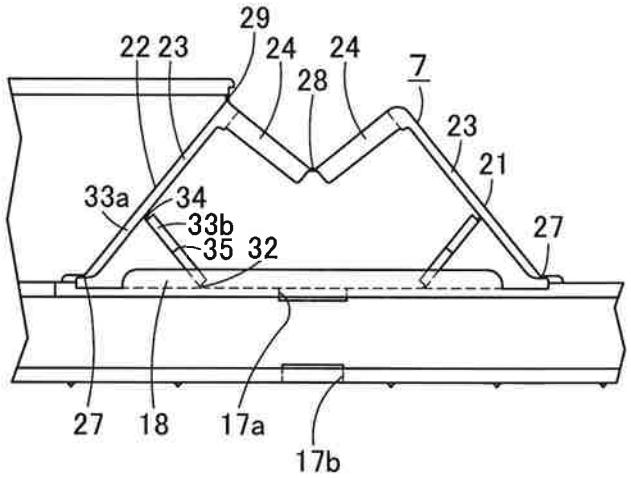
29
22
23
24
24
28
7
23
21
33a
34
33b
35
32
27
27
18
17a
17b

(b)

FIG. 8