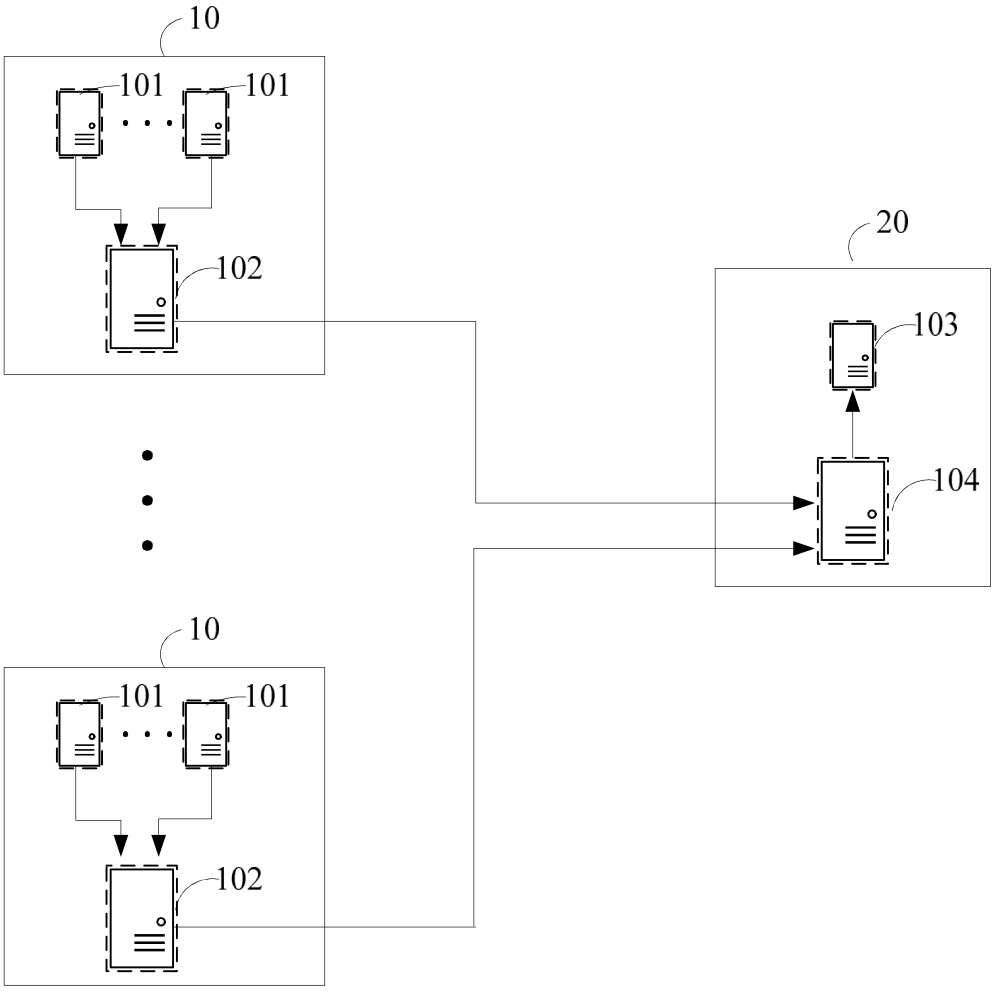

FIG. 1a

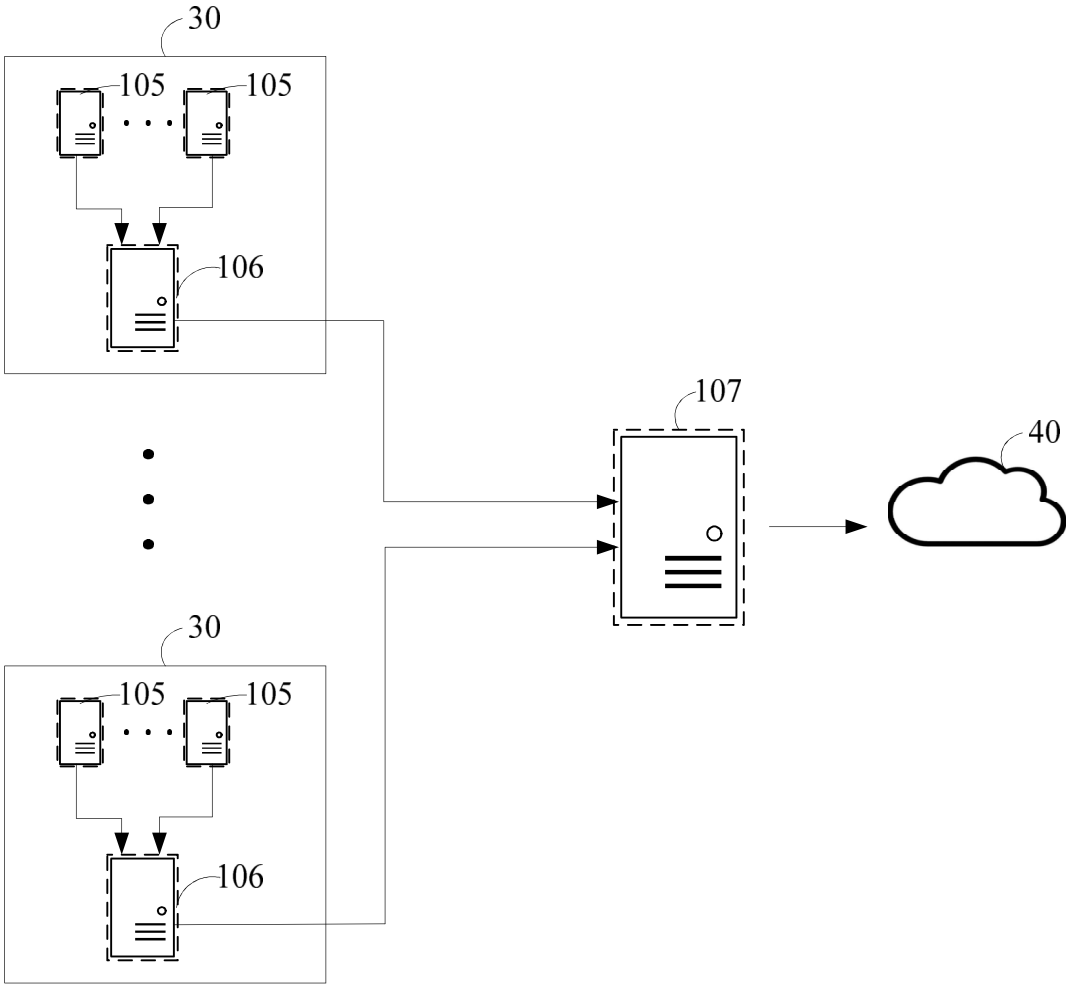

FIG. 1b

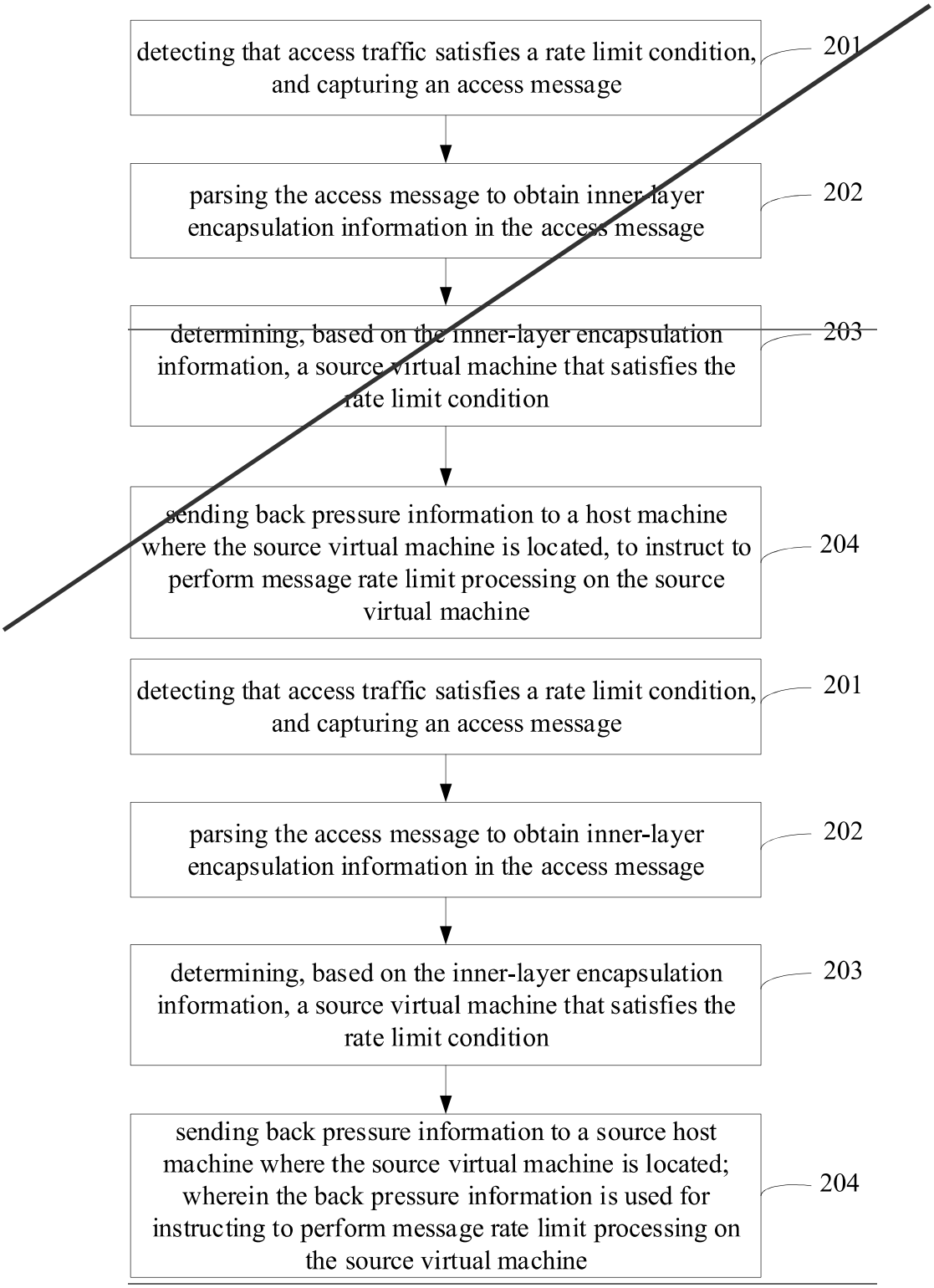

FIG. 2

Action	Limit_type	Direction	key_type	Nc ip	tunnel id	Af	inner_proto	inner_src ip	inner_dst ip	inner src port	inner dst port	ecs_id	out_ps	avg_pps	max_pps

FIG. 3

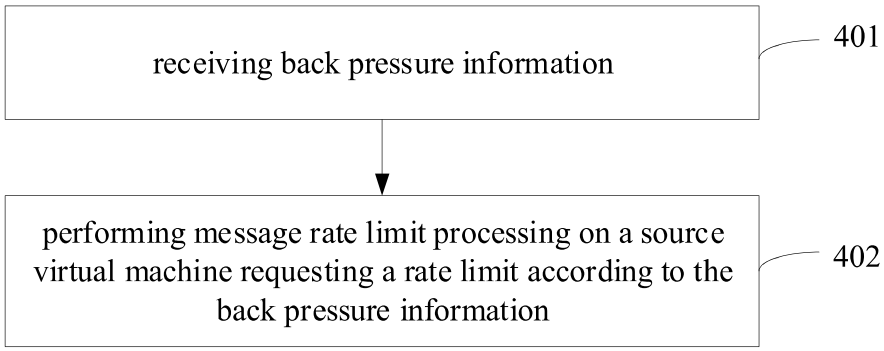
receiving back pressure information
401
performing message rate limit processing on a source virtual machine requesting a rate limit according to the back pressure information
402

FIG. 4

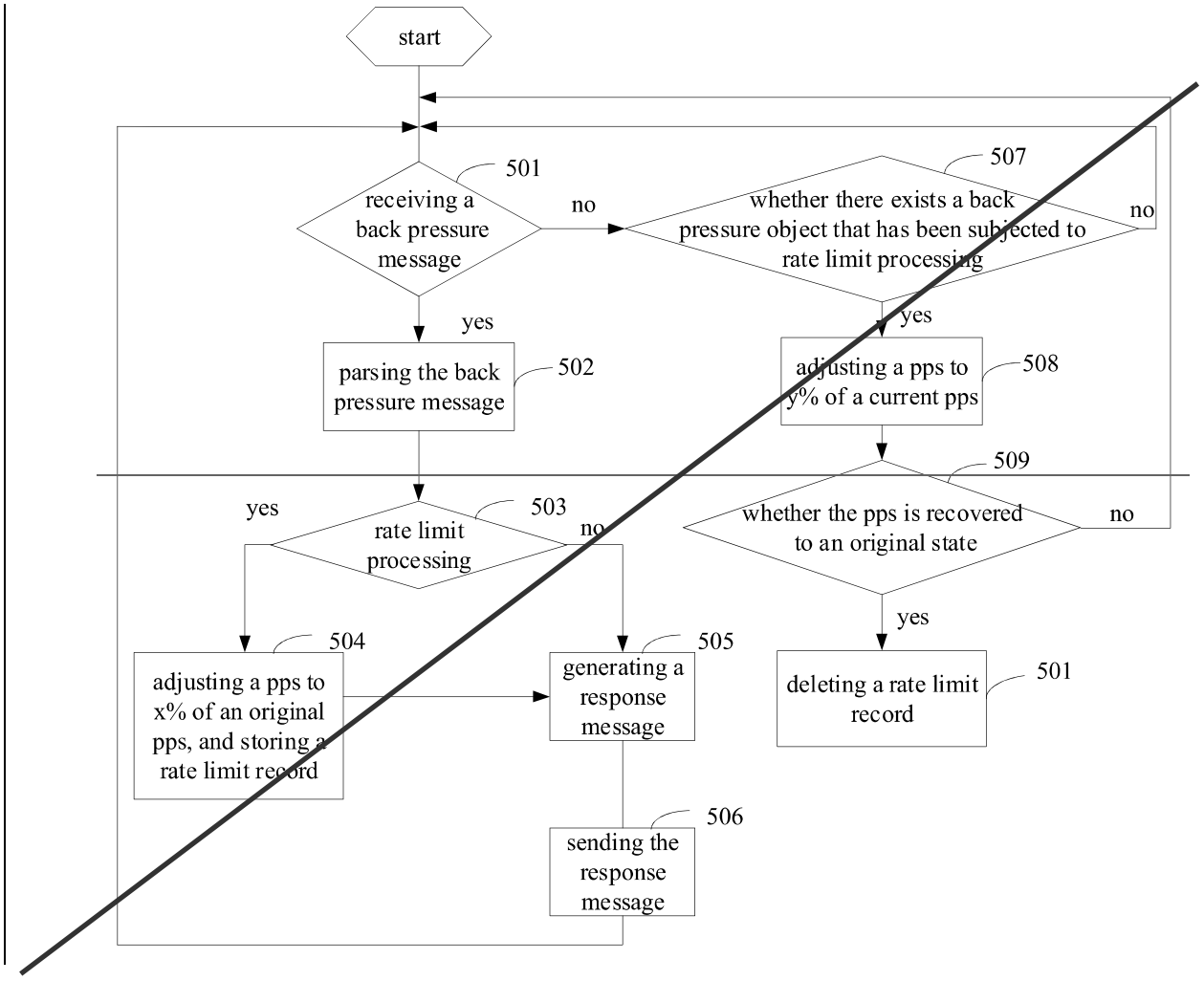
start
501
receiving a back pressure message
no
yes
parsing the back pressure message
502
rate limit processing
503
yes
no
adjusting a pps to x% of an original pps, and storing a rate limit record
504
generating a response message
505
sending the response message
506
507
whether there exists a back pressure object that has been subjected to rate limit processing
no
yes
adjusting a pps to y% of a current pps
508
509
whether the pps is recovered to an original state
no
yes
deleting a rate limit record
501

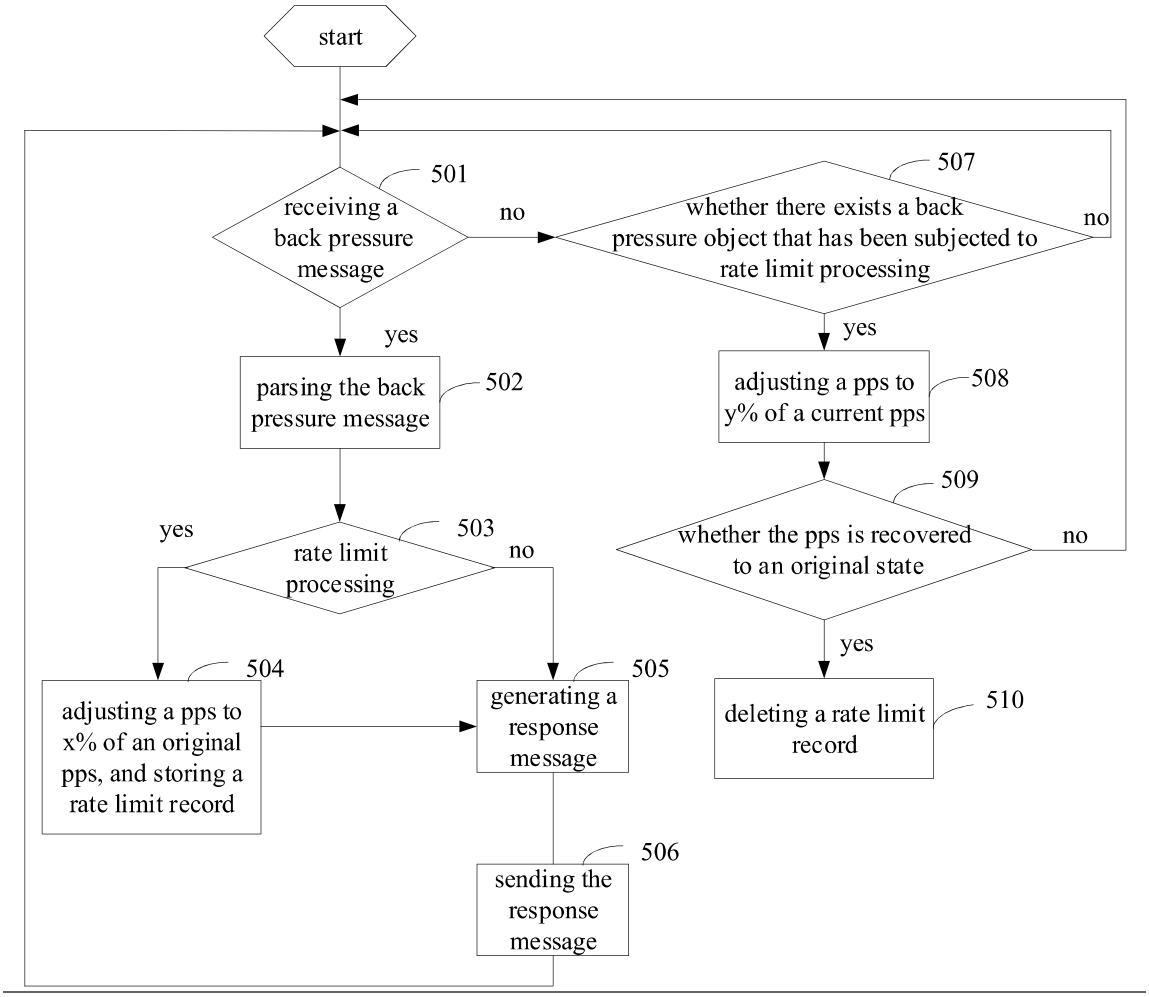
start
501
receiving a back pressure message
no
507
whether there exists a back pressure object that has been subjected to rate limit processing
no
yes
yes
parsing the back pressure message
502
adjusting a pps to y% of a current pps
508
509
whether the pps is recovered to an original state
no
yes
yes
503
rate limit processing
no
504
adjusting a pps to x% of an original pps, and storing a rate limit record
505
generating a response message
510
deleting a rate limit record
506
sending the response message

FIG. 5

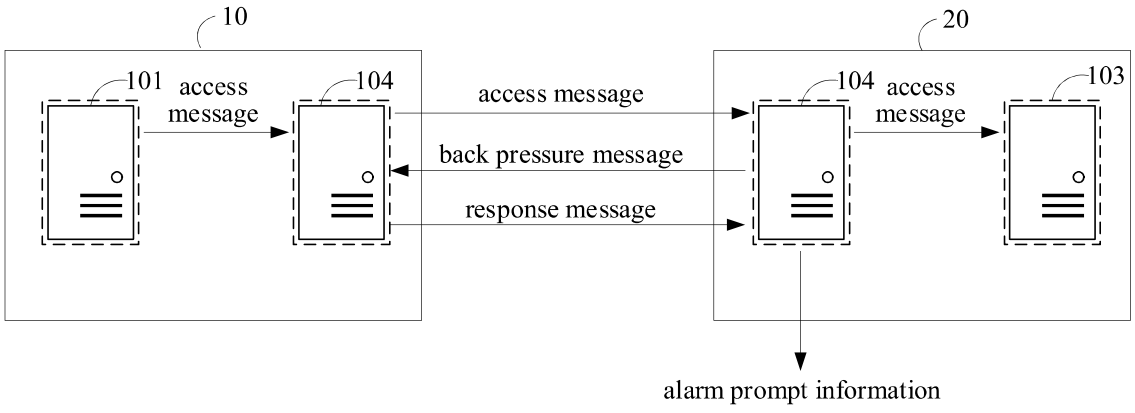
10
20
101
access message
104
access message
back pressure message
response message
104
access message
103
alarm prompt information

FIG. 6a

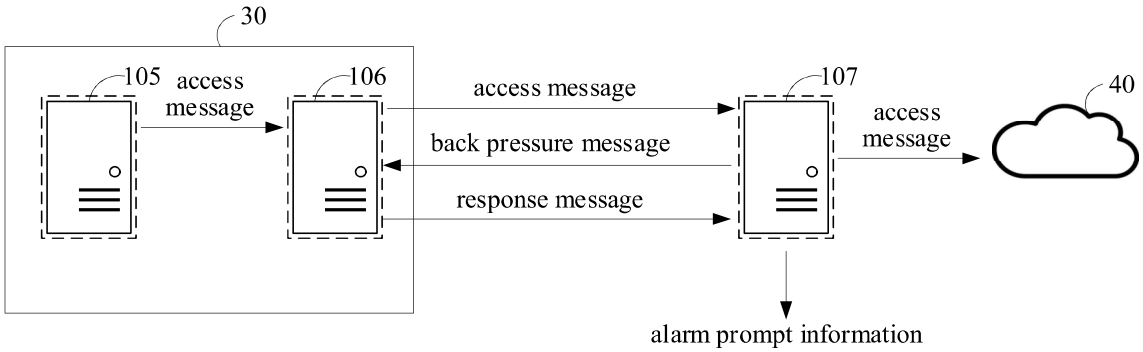

FIG. 6b

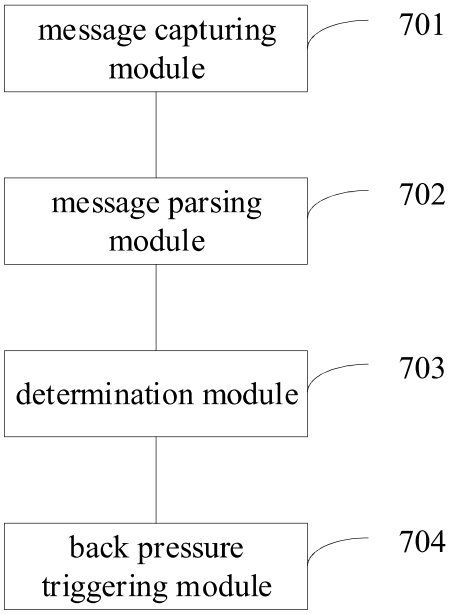

FIG. 7

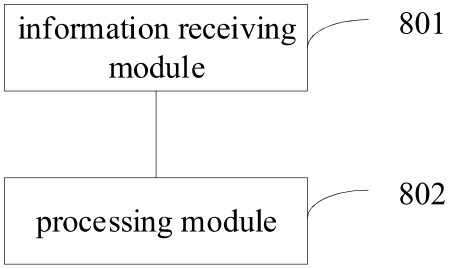

FIG. 8

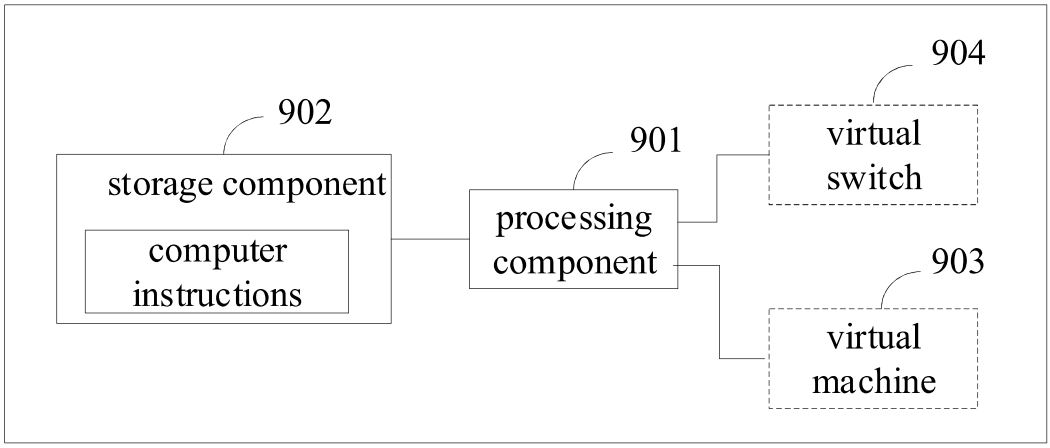

FIG. 9

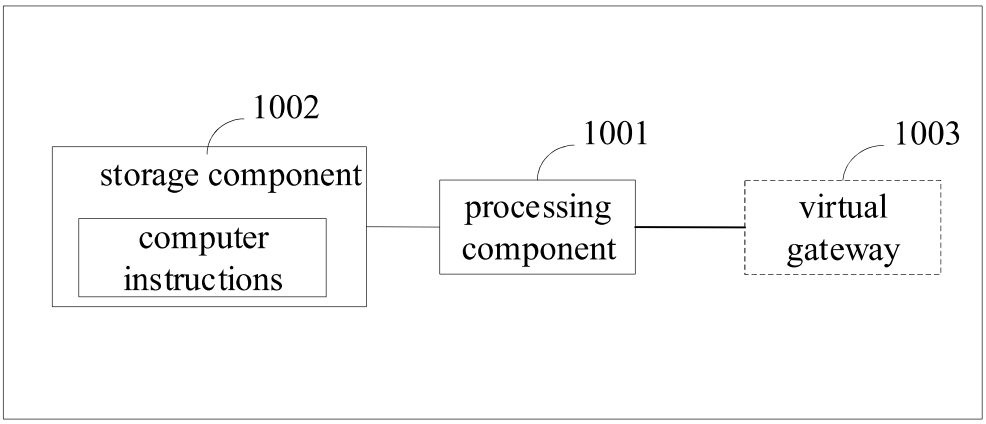

FIG. 10

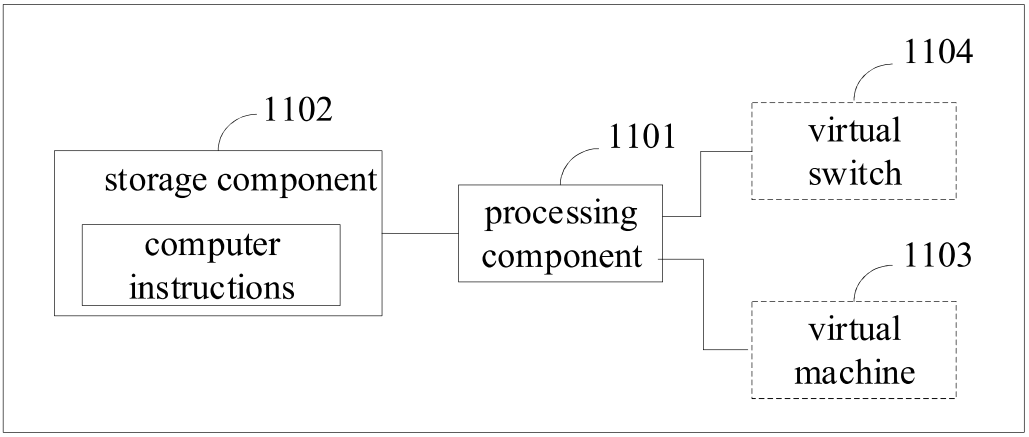

FIG. 11