FIG. 1

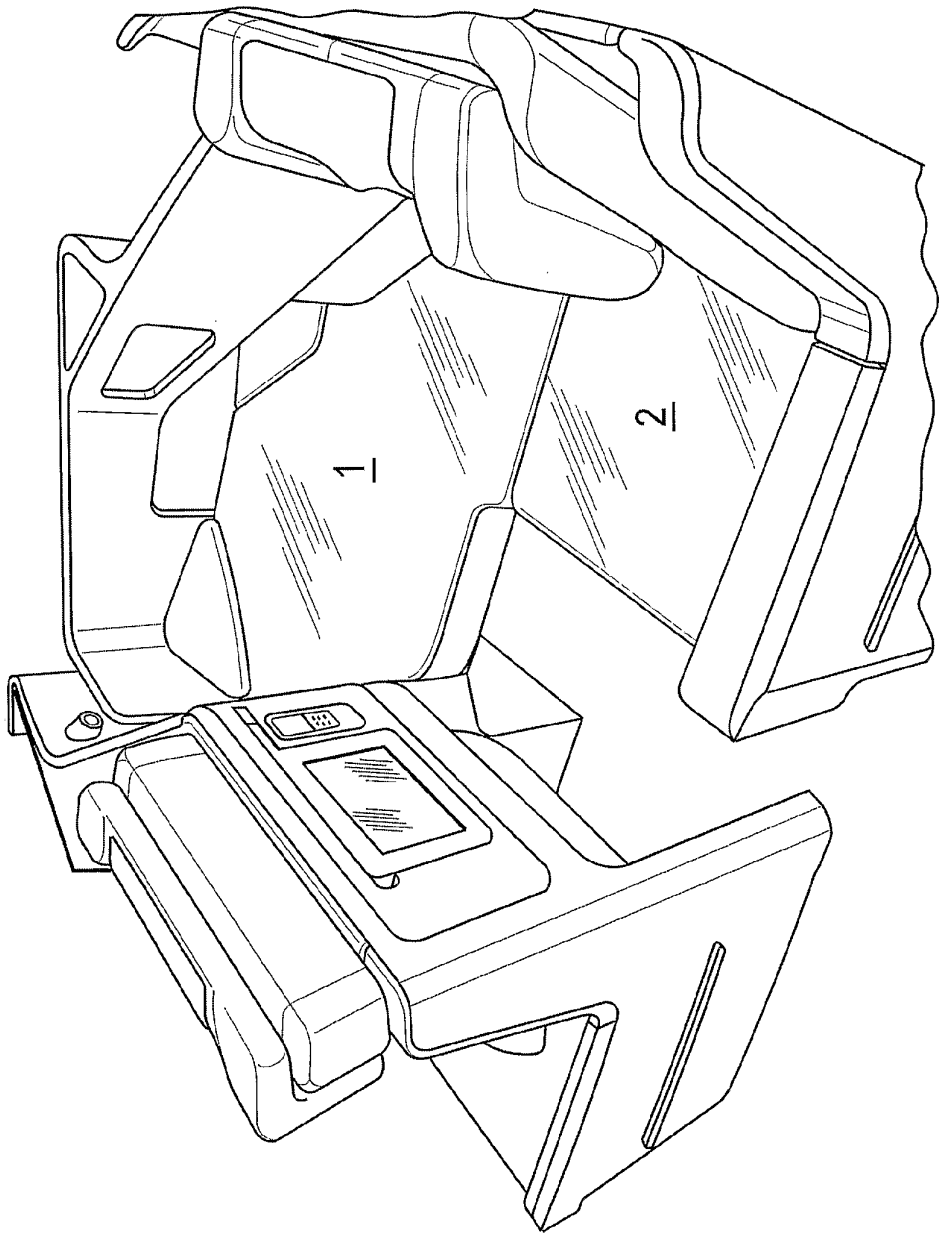

FIG. 2

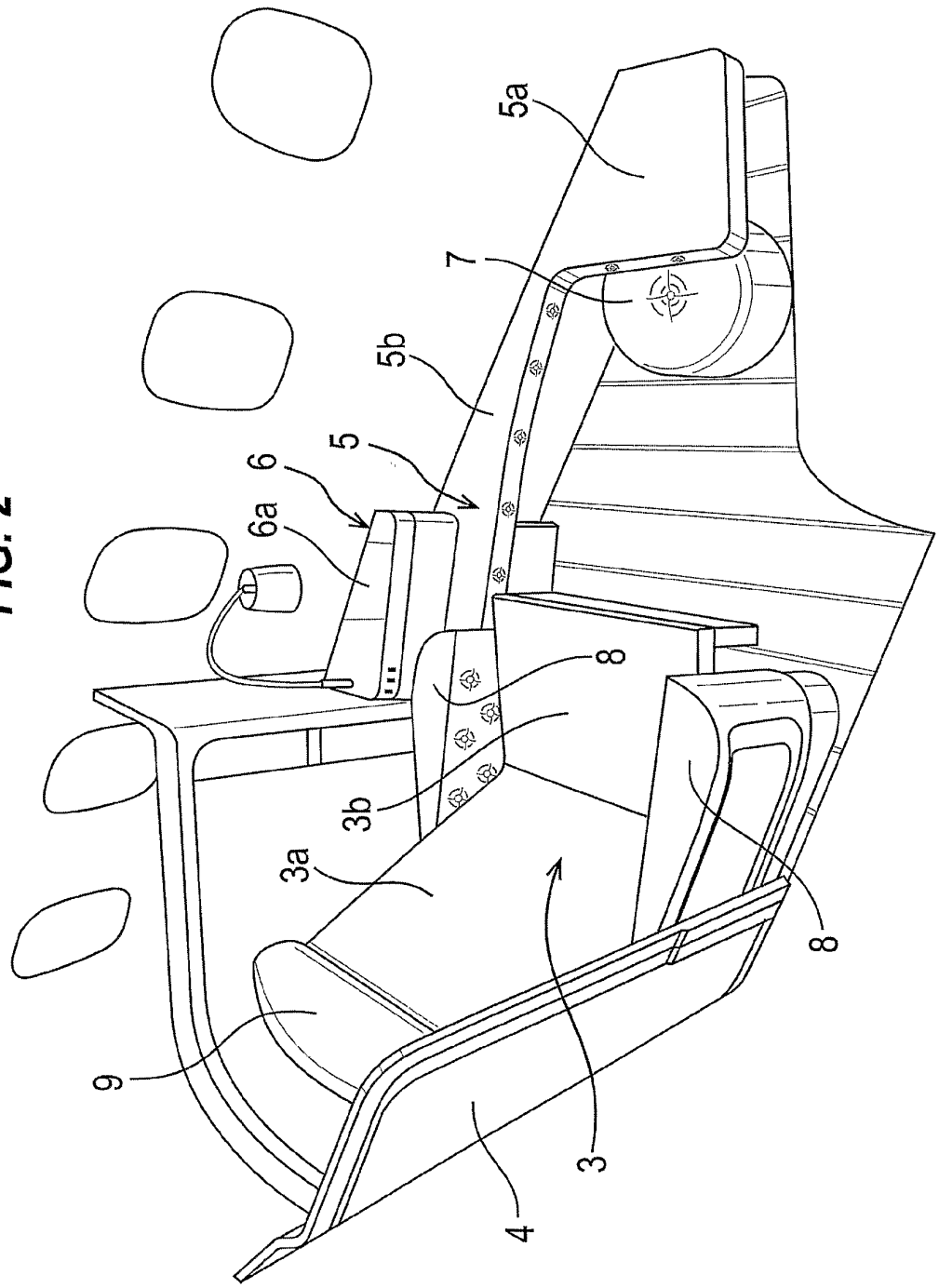

FIG. 3a

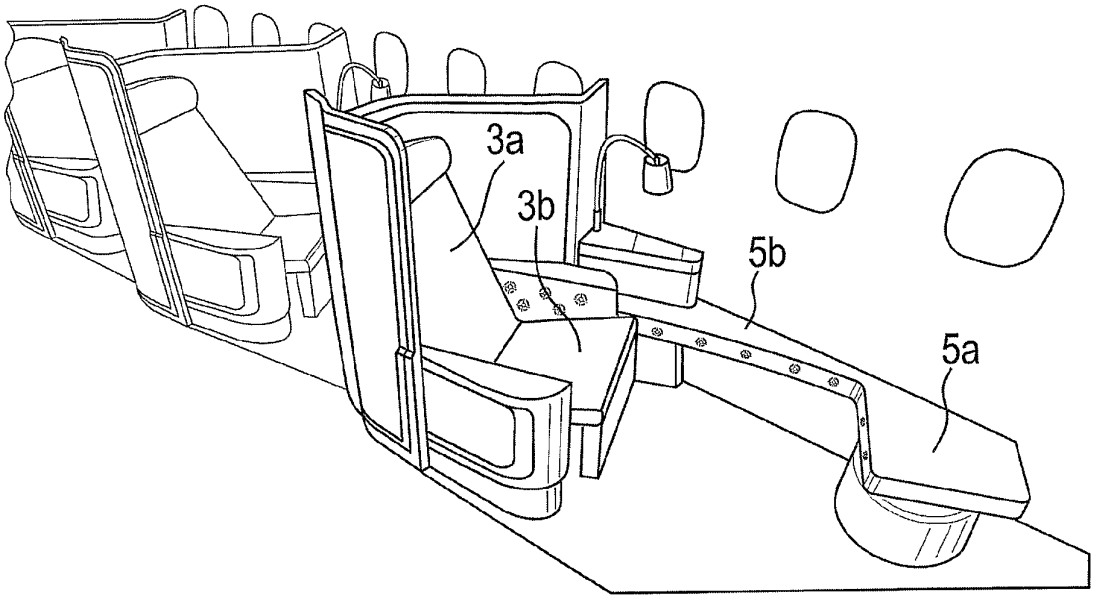

FIG. 3b

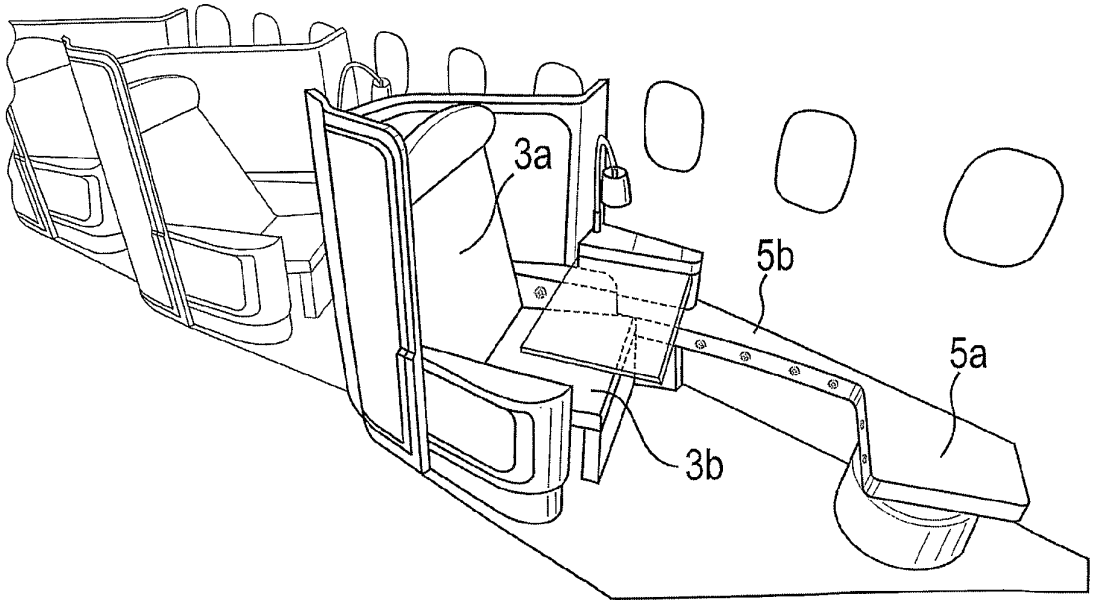

FIG. 3c

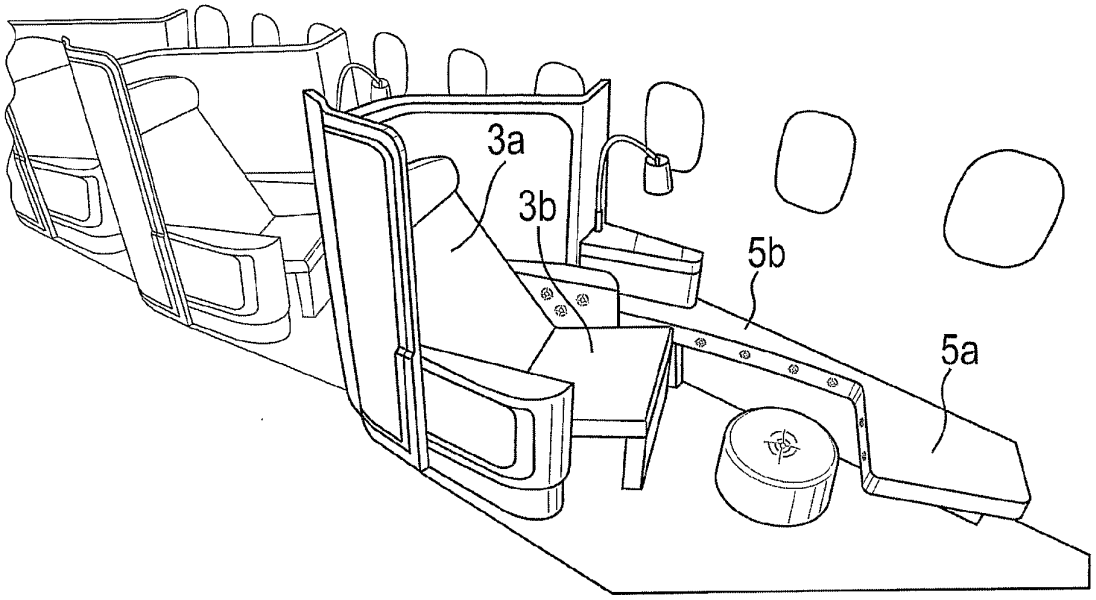

FIG. 3d

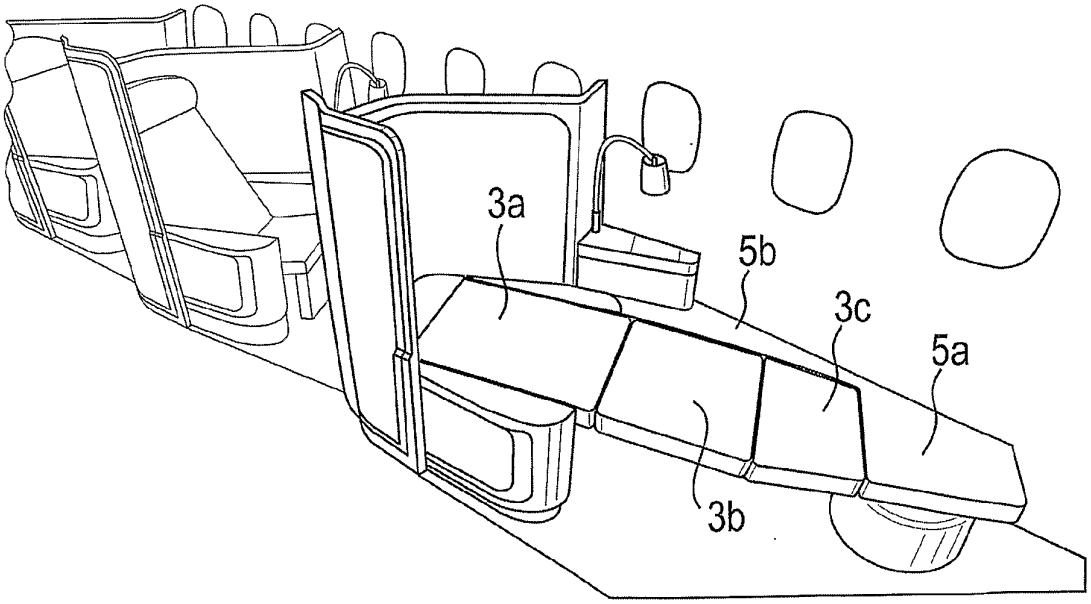

FIG. 4a

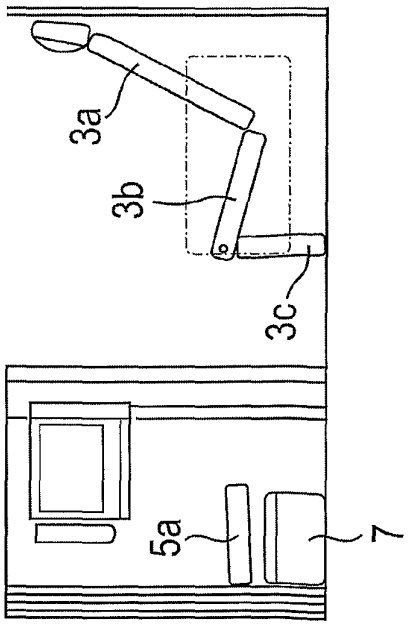

FIG. 4b

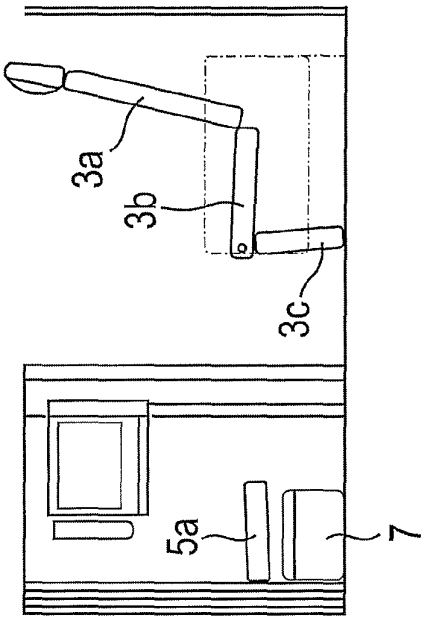

FIG. 4c

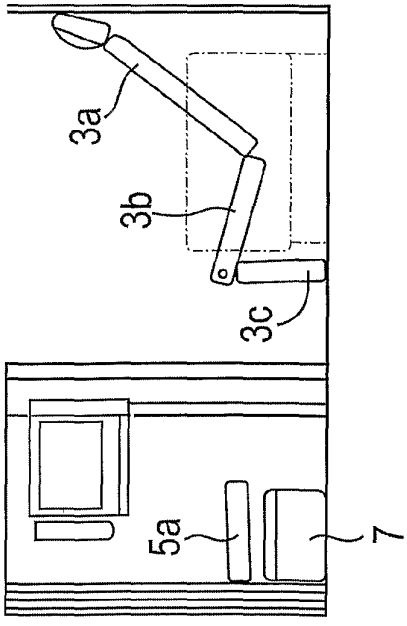

FIG. 4d

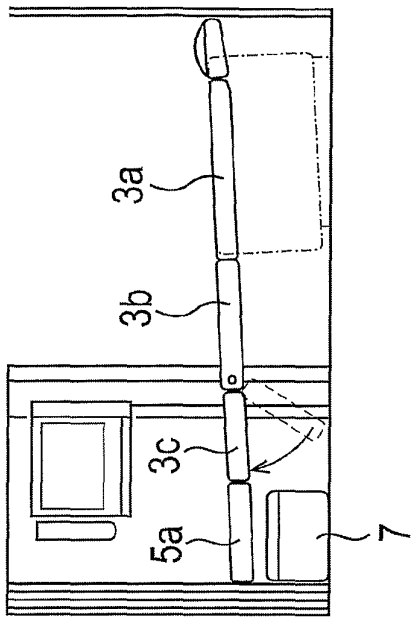

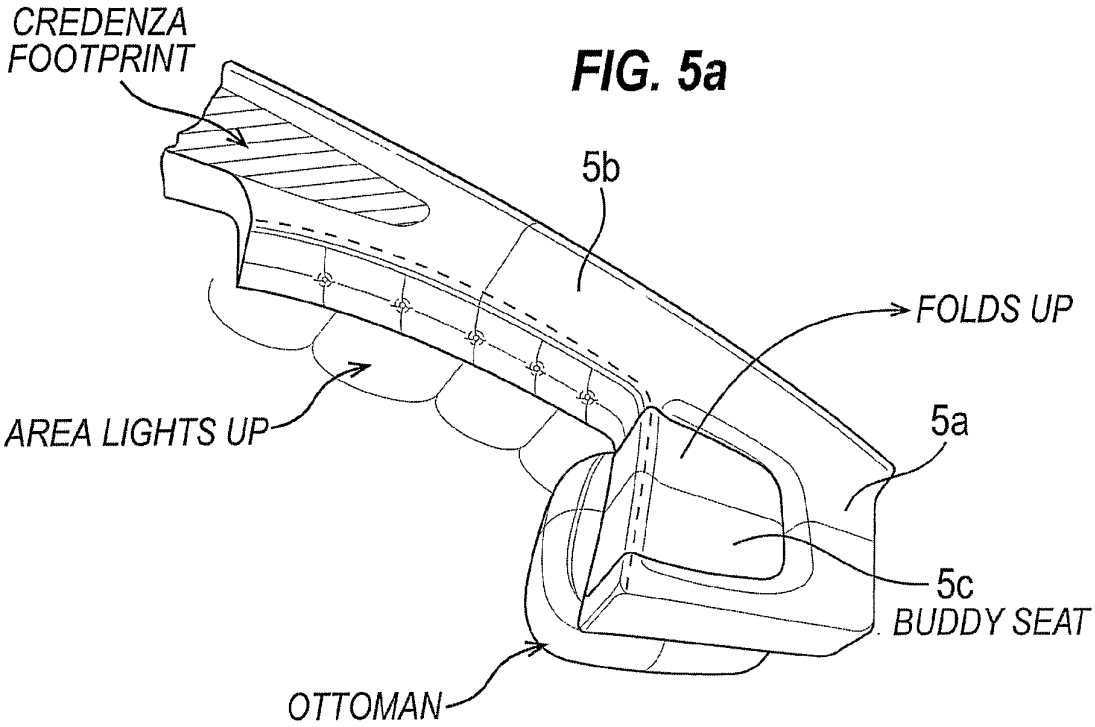
CREDENZA
FOOTPRINT
5b
FOLDS UP
AREA LIGHTS UP
5a
5c
BUDDY SEAT
OTTOMAN

FIG. 5a

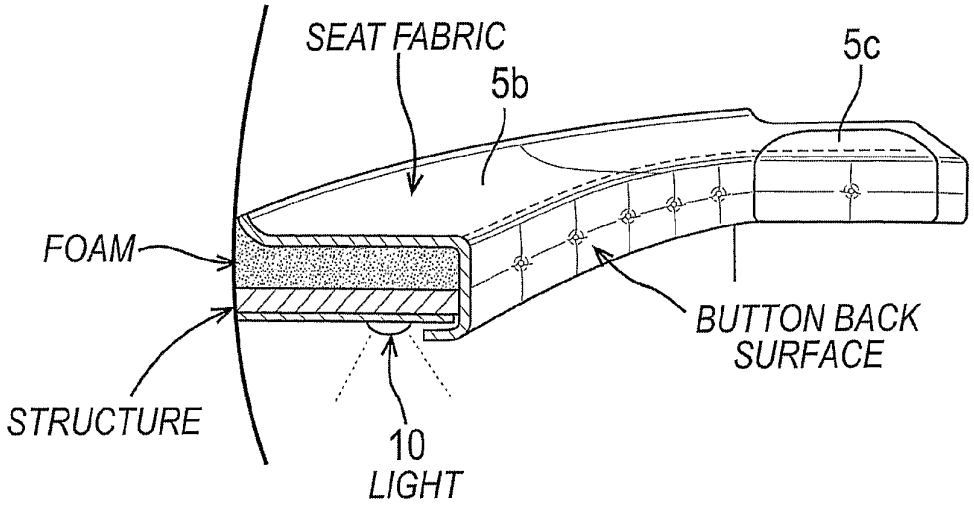
SEAT FABRIC
5b
5c
FOAM
BUTTON BACK
SURFACE
STRUCTURE
10
LIGHT

FIG. 5b

FIG. 6

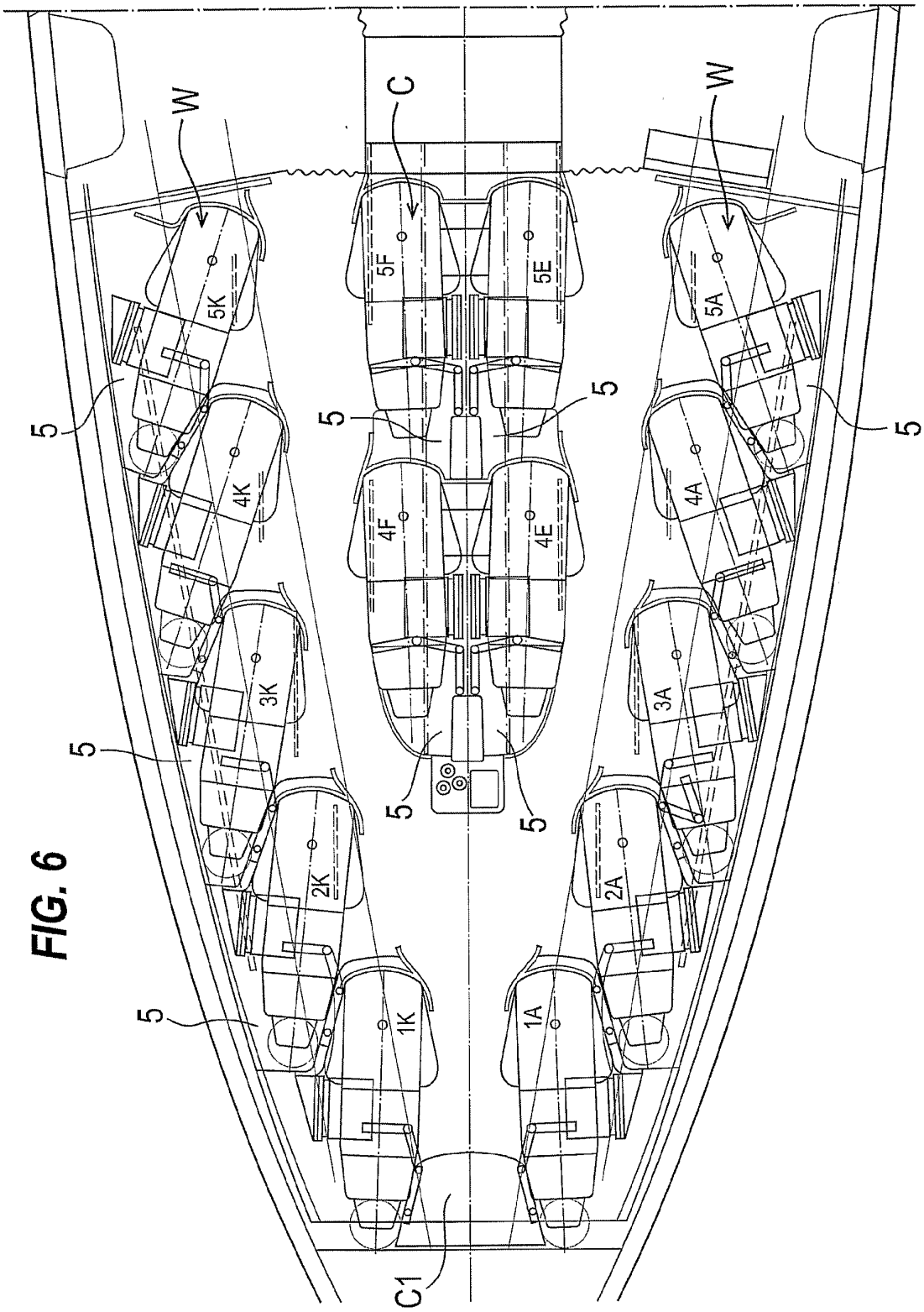

FIG. 7

