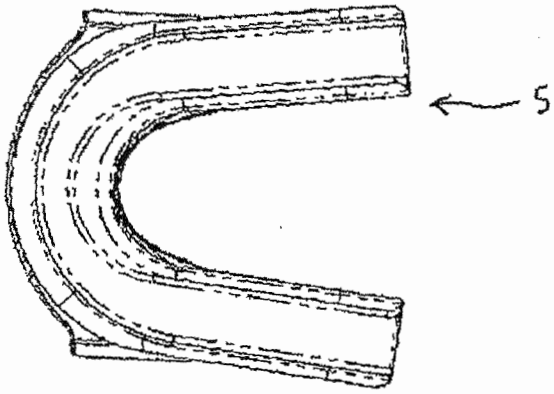

FIGURE 1

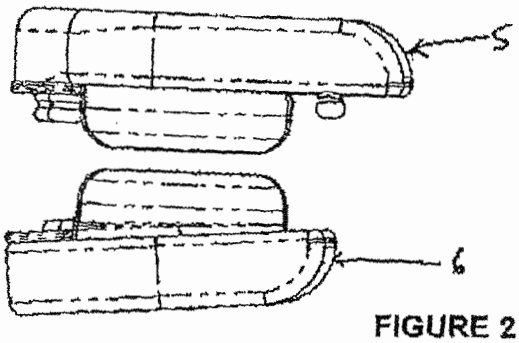

FIGURE 2

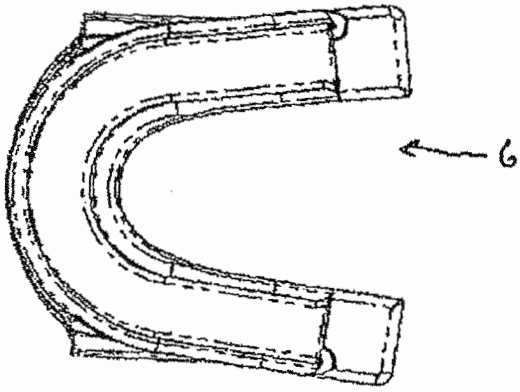

FIGURE 3

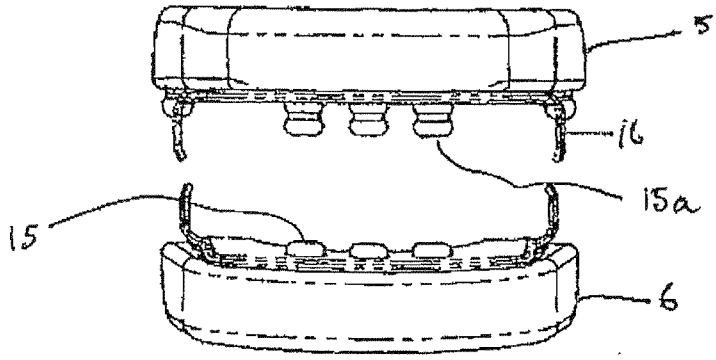

FIGURE 4

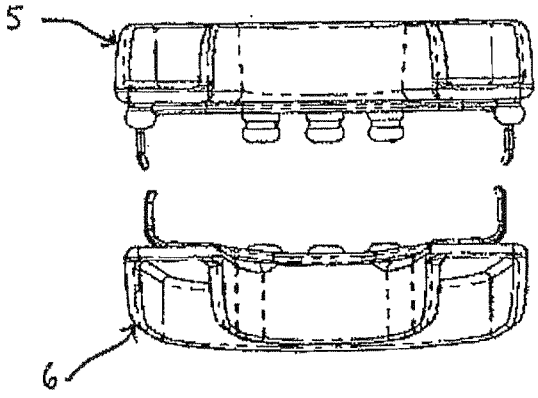

FIGURE 5

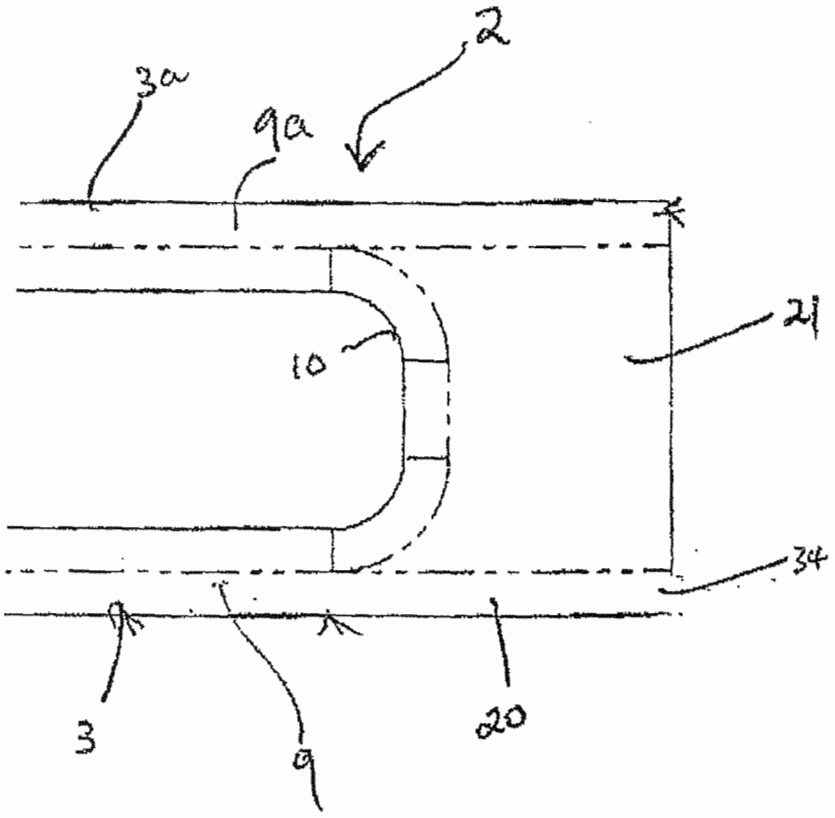

FIGURE 6

FIGURE 7

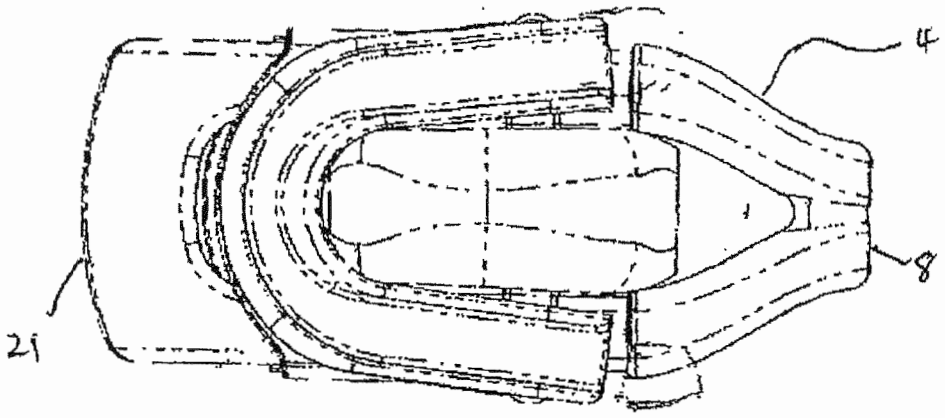

FIGURE 8

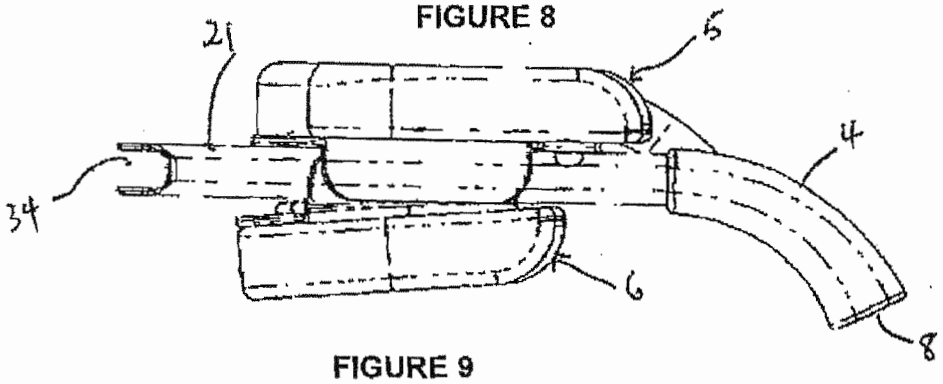

FIGURE 9

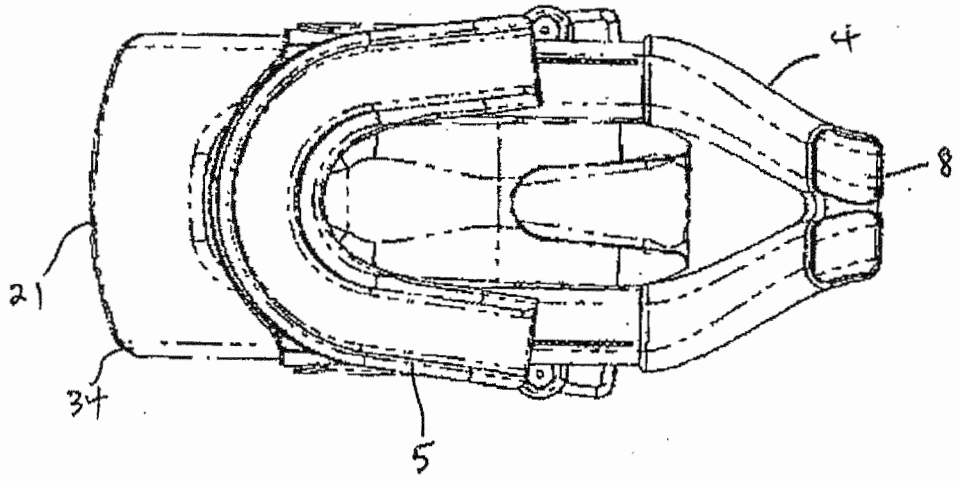

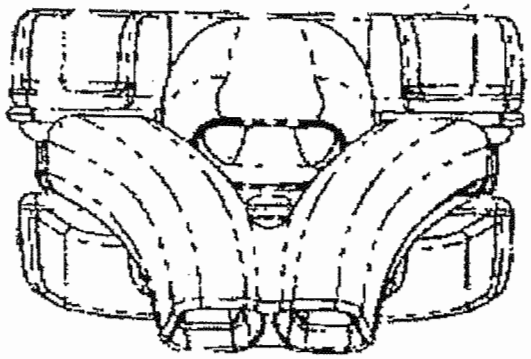

FIGURE 10

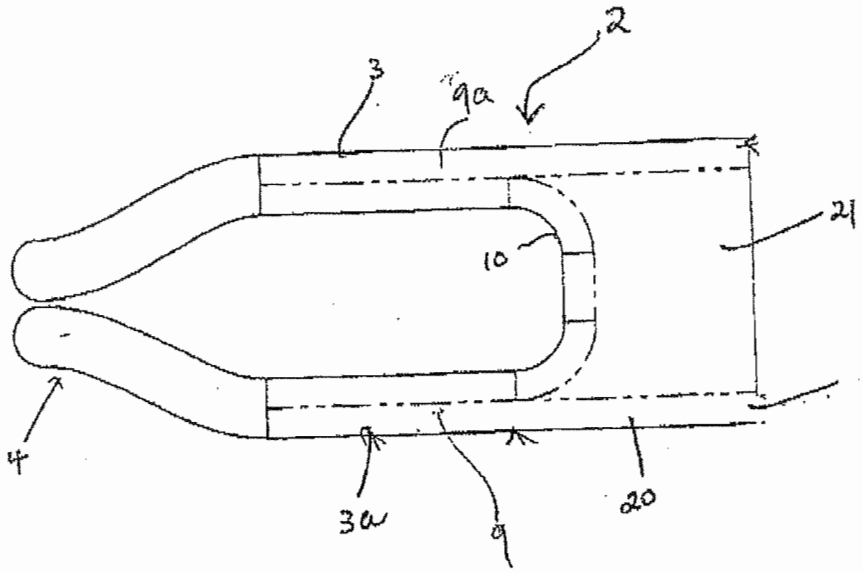

FIGURE 11

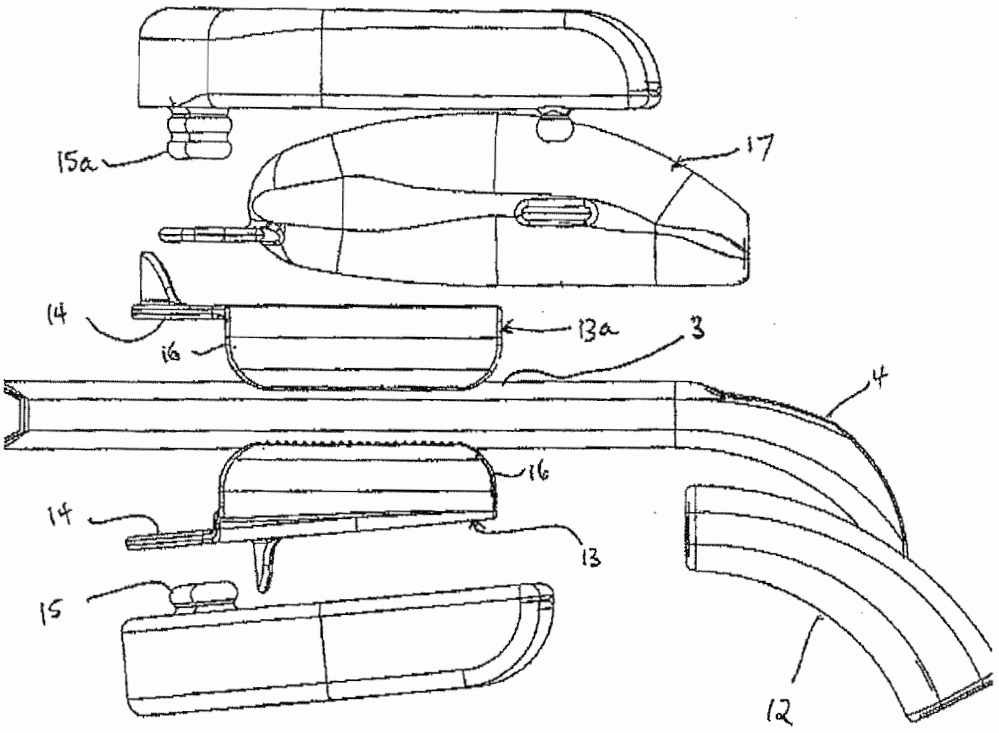

FIGURE 12

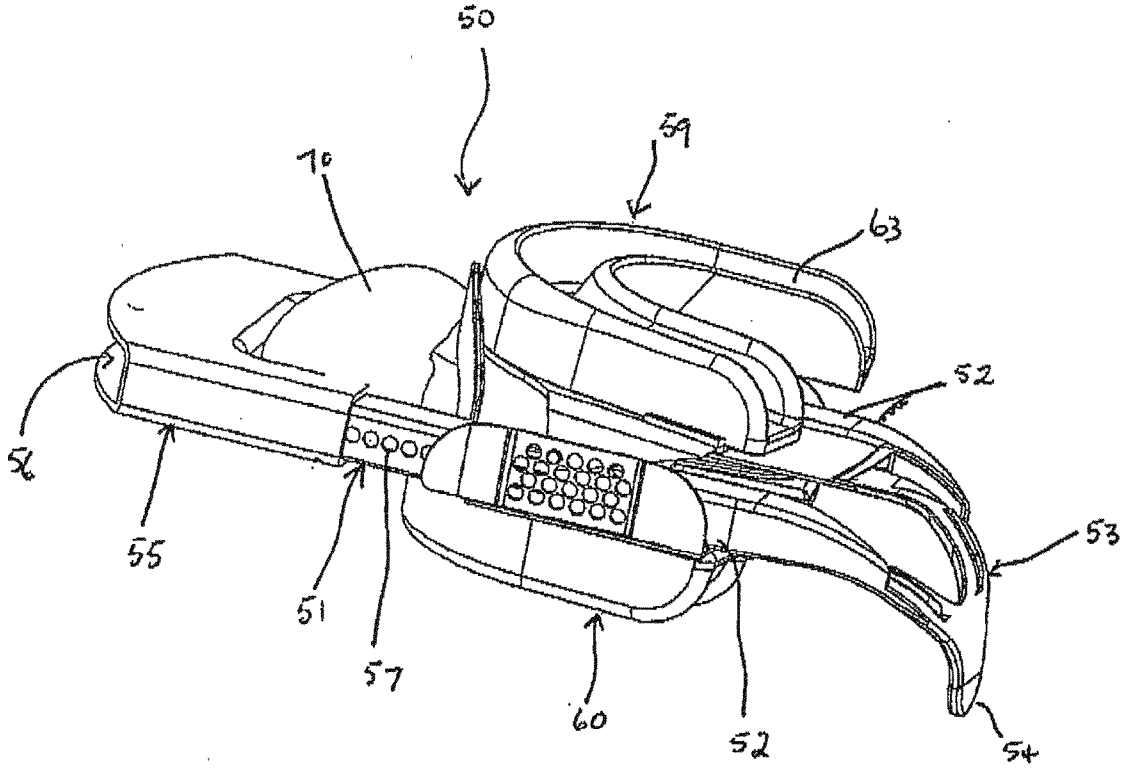

~~FIG 13~~

FIGURE 13

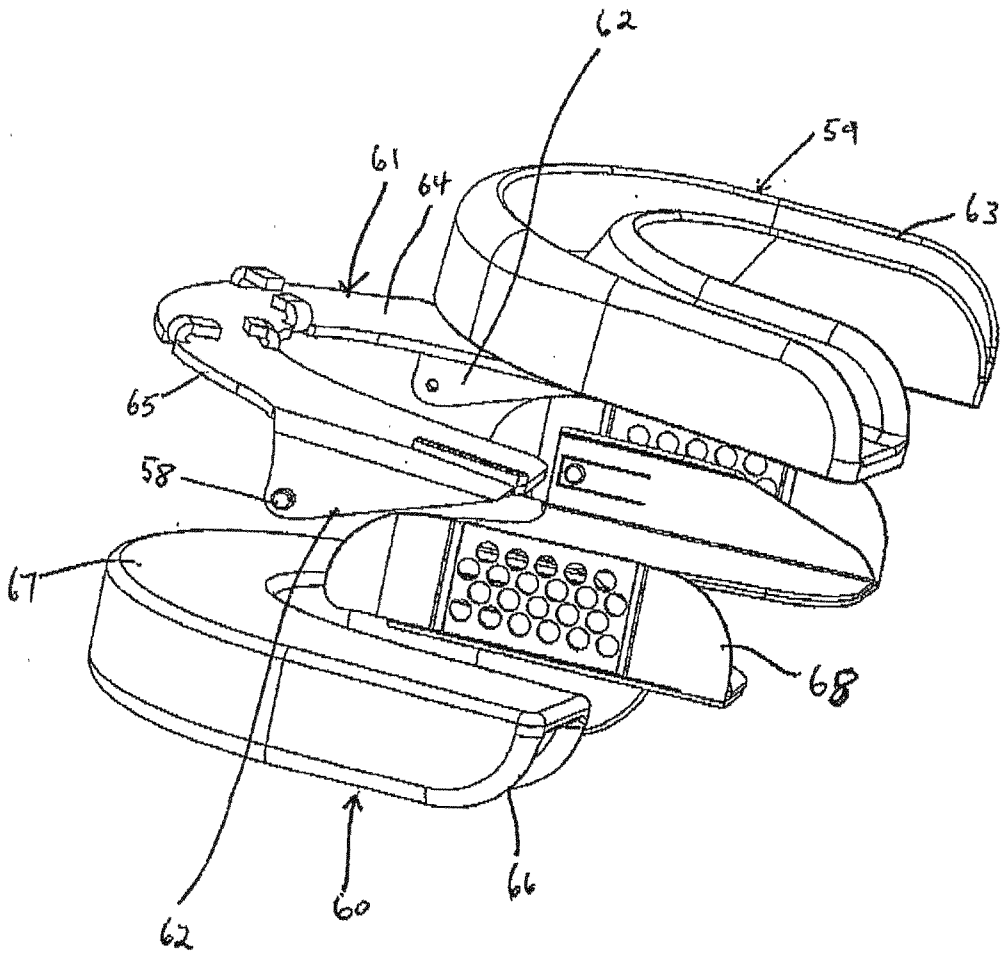

~~FIG 14~~

FIGURE 14

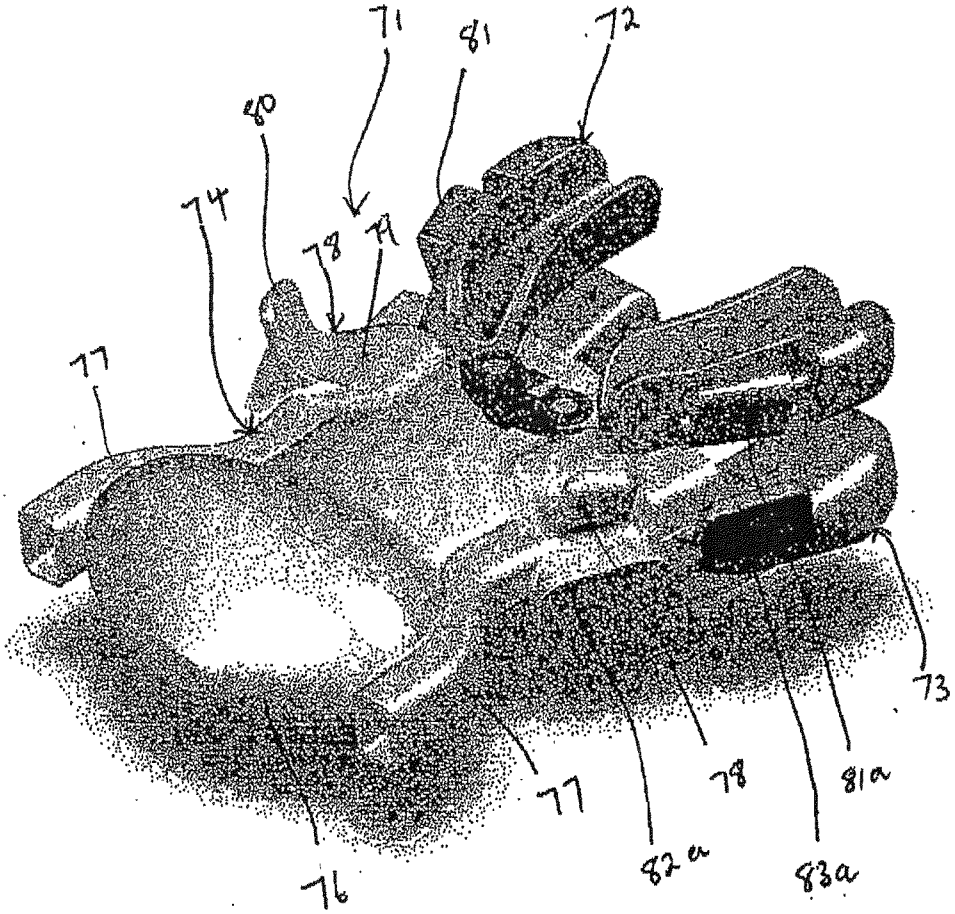

~~15~~

FIGURE 15

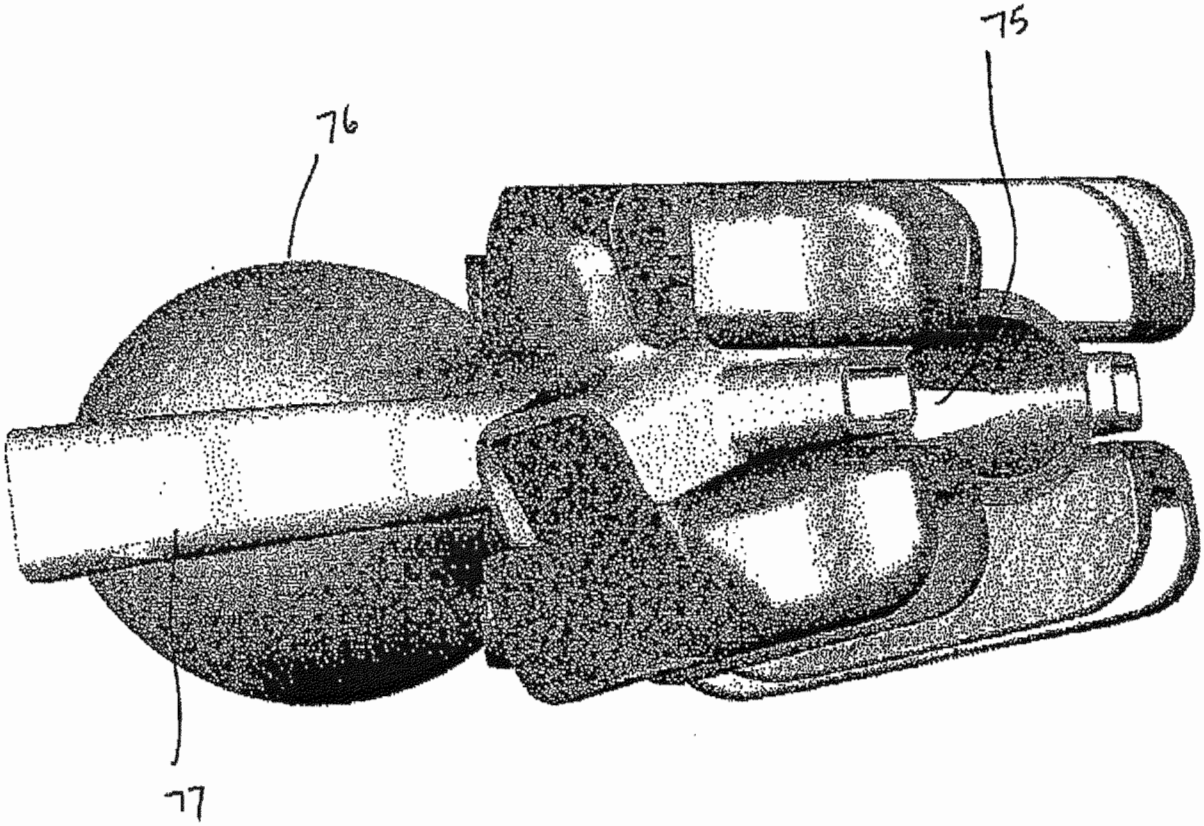

FIG 16

FIGURE 16

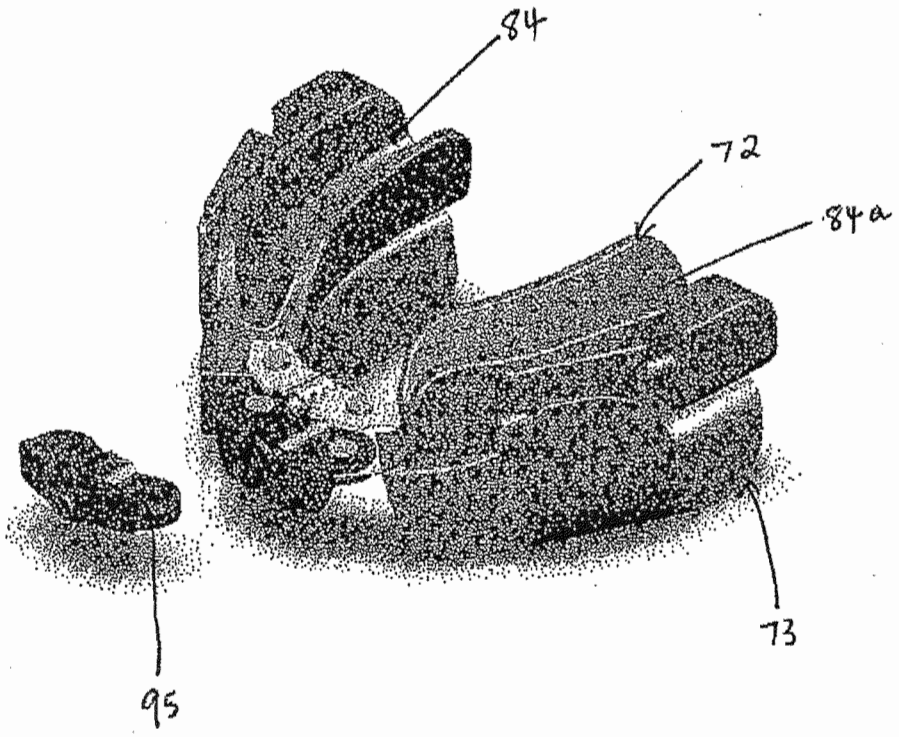

FIG 17

FIGURE 17

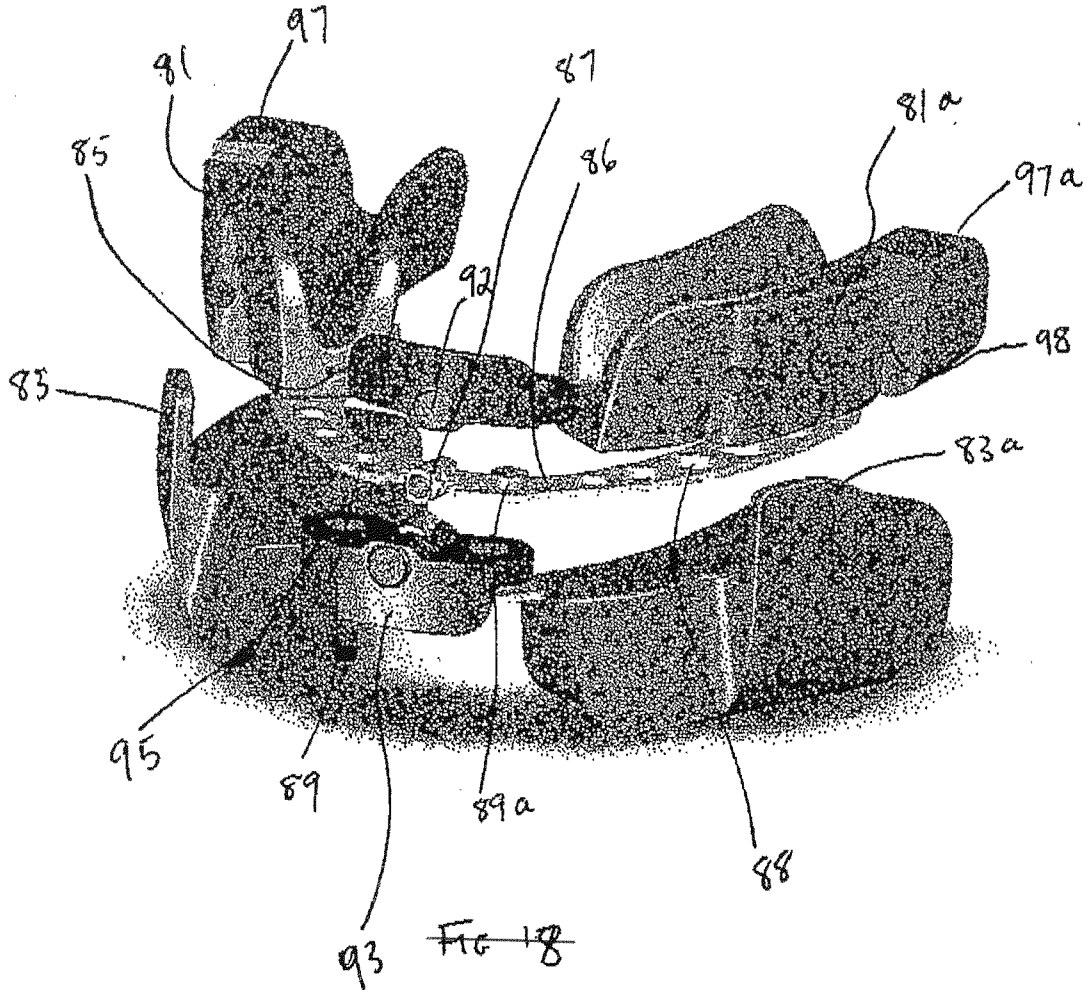

Fig 18

FIGURE 18

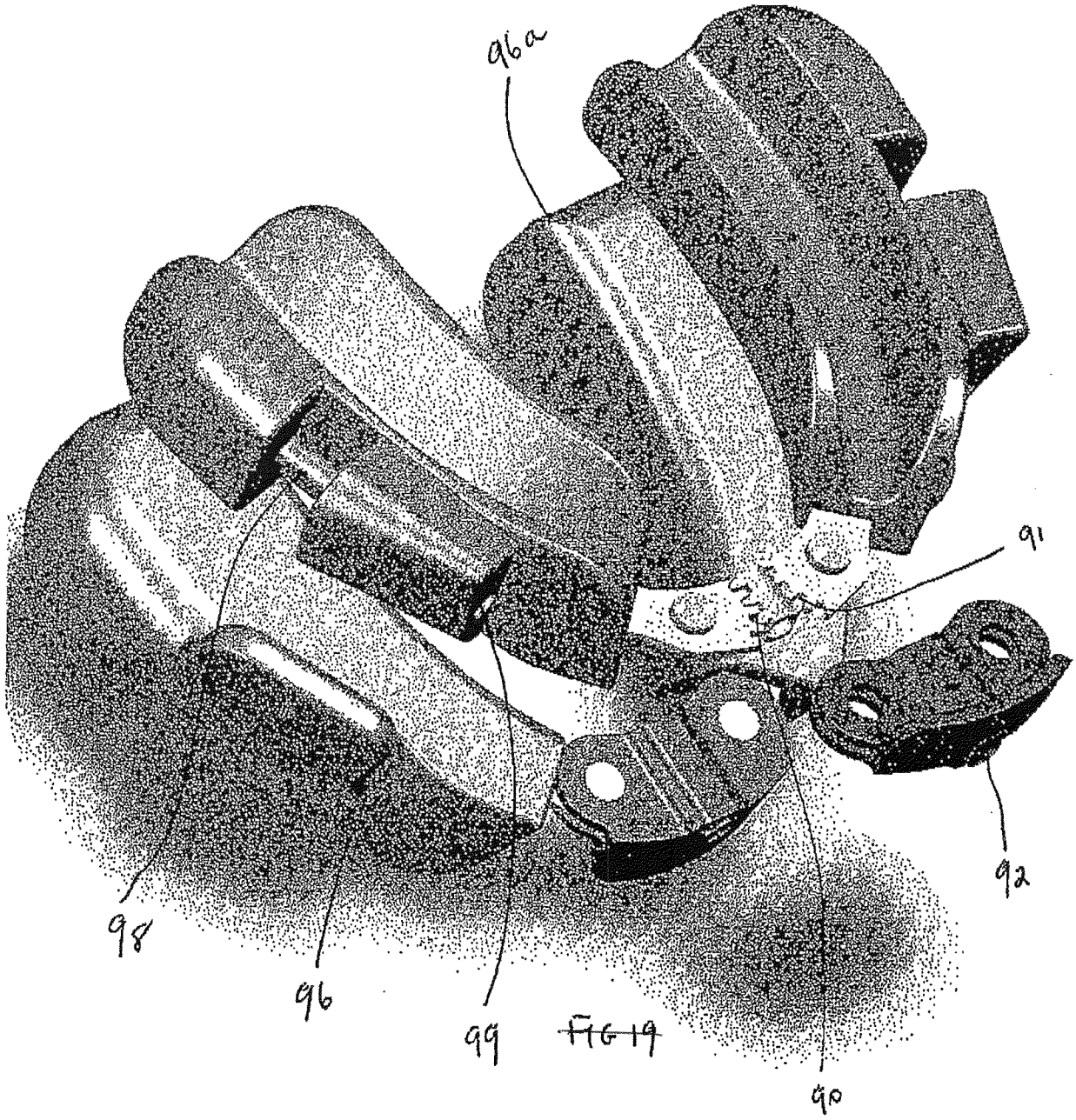

FIGURE 19