
TIME-DOMAIN AUDIO SIGNAL 110
ELECTRONIC DEVICE 100
ENCODED AUDIO SIGNAL 120

FIG. 1

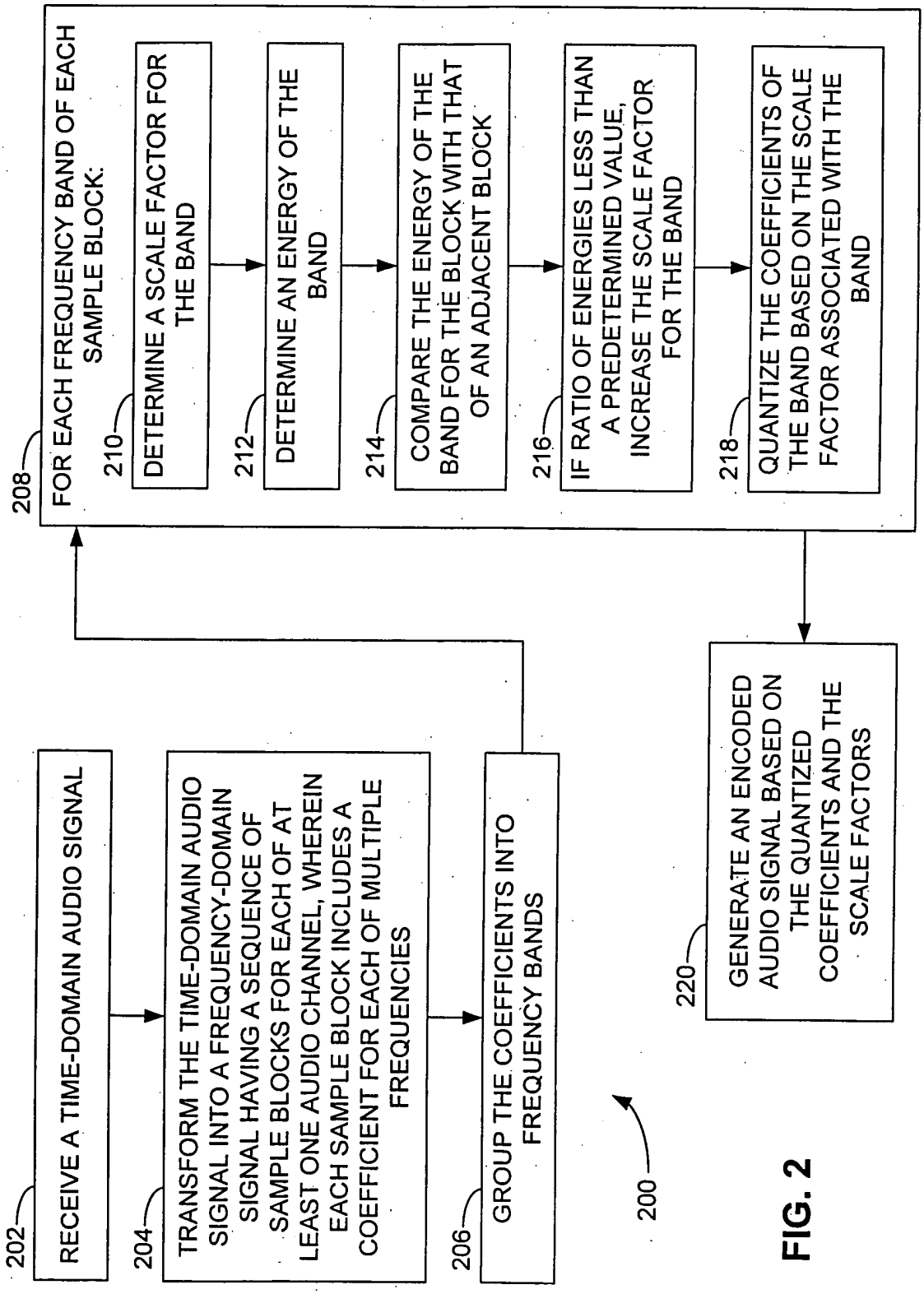
200
202
RECEIVE A TIME-DOMAIN AUDIO SIGNAL
204
TRANSFORM THE TIME-DOMAIN AUDIO SIGNAL INTO A FREQUENCY-DOMAIN SIGNAL HAVING A SEQUENCE OF SAMPLE BLOCKS FOR EACH OF AT LEAST ONE AUDIO CHANNEL, WHEREIN EACH SAMPLE BLOCK INCLUDES A COEFFICIENT FOR EACH OF MULTIPLE FREQUENCIES
206
GROUP THE COEFFICIENTS INTO FREQUENCY BANDS
208
FOR EACH FREQUENCY BAND OF EACH SAMPLE BLOCK:
210
DETERMINE A SCALE FACTOR FOR THE BAND
212
DETERMINE AN ENERGY OF THE BAND
214
COMPARE THE ENERGY OF THE BAND FOR THE BLOCK WITH THAT OF AN ADJACENT BLOCK
216
IF RATIO OF ENERGIES LESS THAN A PREDETERMINED VALUE, INCREASE THE SCALE FACTOR FOR THE BAND
218
QUANTIZE THE COEFFICIENTS OF THE BAND BASED ON THE SCALE FACTOR ASSOCIATED WITH THE BAND
220
GENERATE AN ENCODED AUDIO SIGNAL BASED ON THE QUANTIZED COEFFICIENTS AND THE SCALE FACTORS

FIG. 2

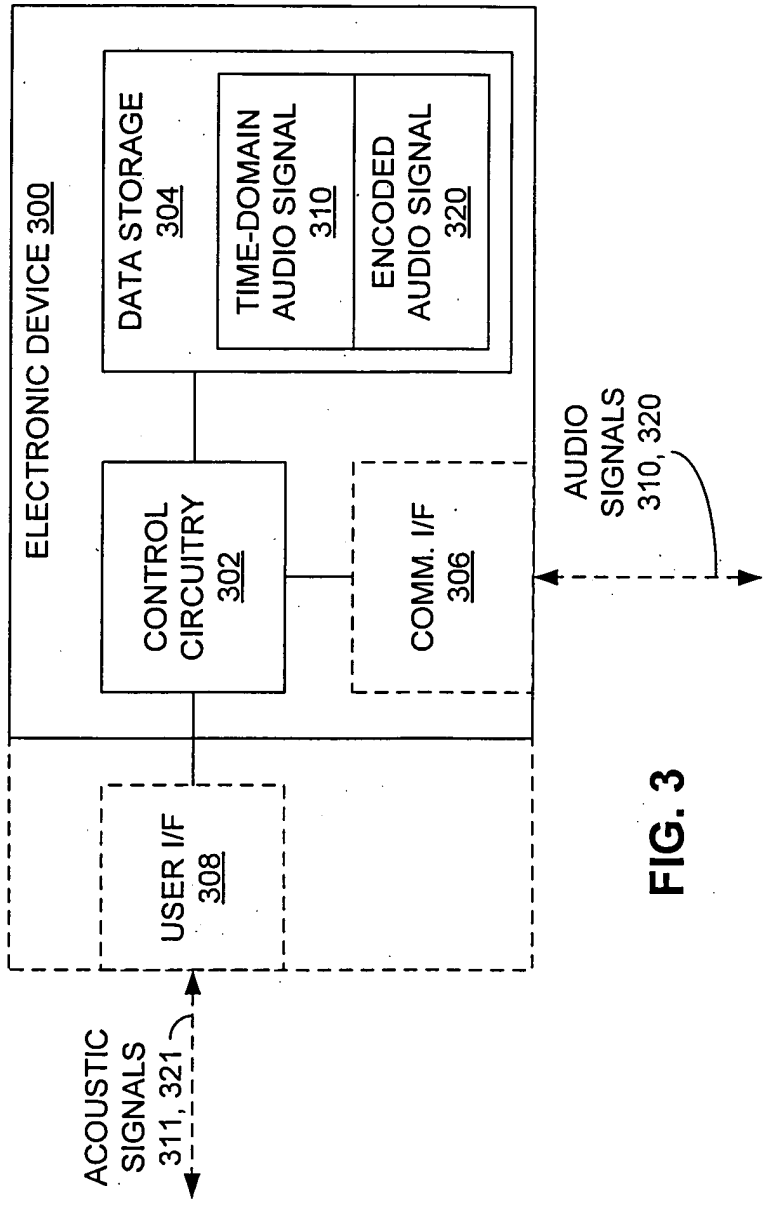
ELECTRONIC DEVICE 300
DATA STORAGE 304
TIME-DOMAIN AUDIO SIGNAL 310
ENCODED AUDIO SIGNAL 320
CONTROL CIRCUITRY 302
COMM. I/F 306
USER I/F 308
AUDIO SIGNALS 310, 320
ACOUSTIC SIGNALS 311, 321

FIG. 3

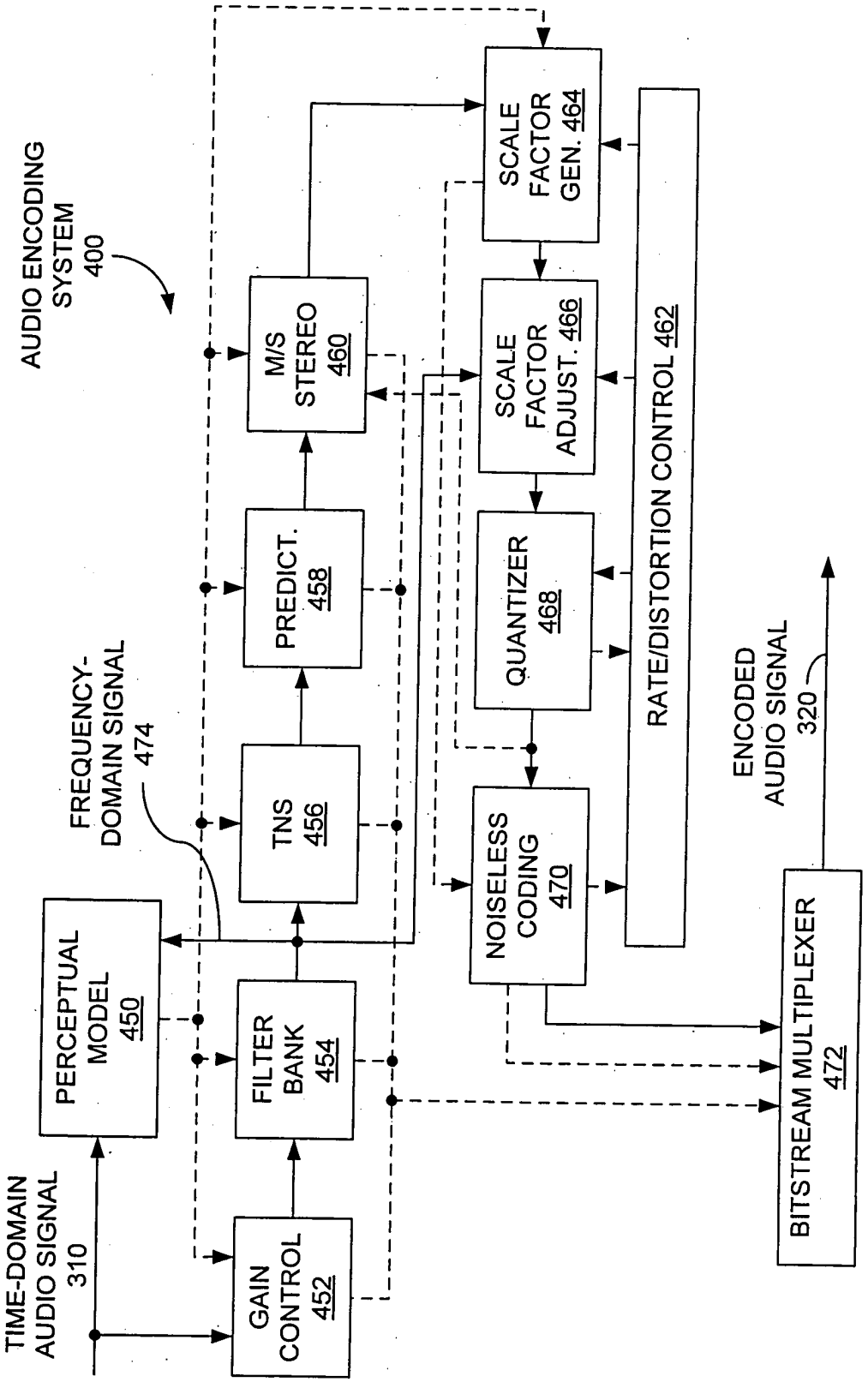
AUDIO ENCODING SYSTEM 400
TIME-DOMAIN AUDIO SIGNAL 310
GAIN CONTROL 452
PERCEPTUAL MODEL 450
FILTER BANK 454
TNS 456
PREDICT. 458
M/S STEREO 460
FREQUENCY-DOMAIN SIGNAL 474
SCALE FACTOR GEN. 464
SCALE FACTOR ADJUST. 466
QUANTIZER 468
NOISELESS CODING 470
RATE/DISTORTION CONTROL 462
BITSTREAM MULTIPLEXER 472
ENCODED AUDIO SIGNAL 320

FIG. 4

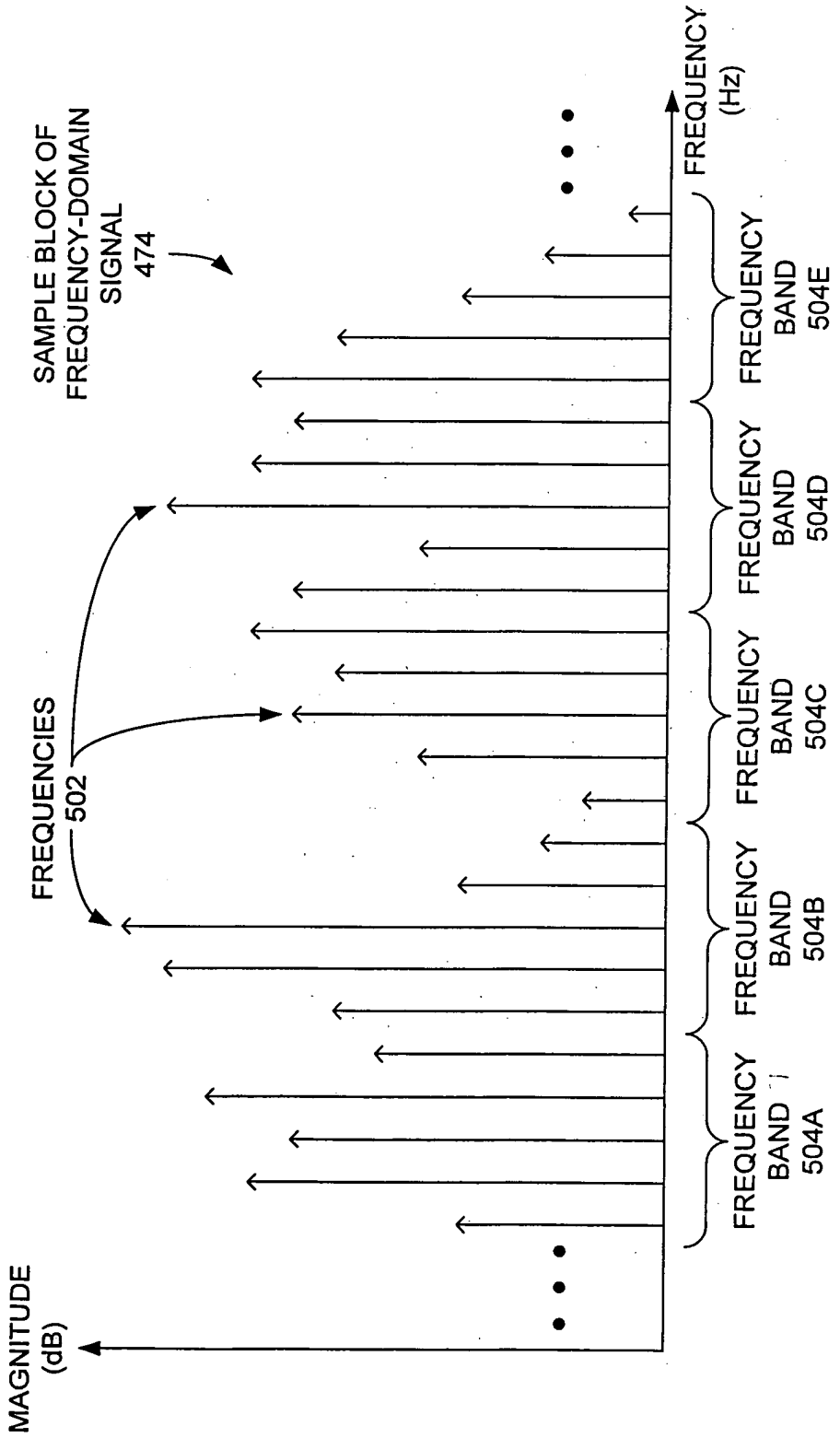
MAGNITUDE (dB)
FREQUENCY (Hz)
SAMPLE BLOCK OF FREQUENCY-DOMAIN SIGNAL 474
FREQUENCIES 502
FREQUENCY BAND 504A
FREQUENCY BAND 504B
FREQUENCY BAND 504C
FREQUENCY BAND 504D
FREQUENCY BAND 504E

FIG. 5

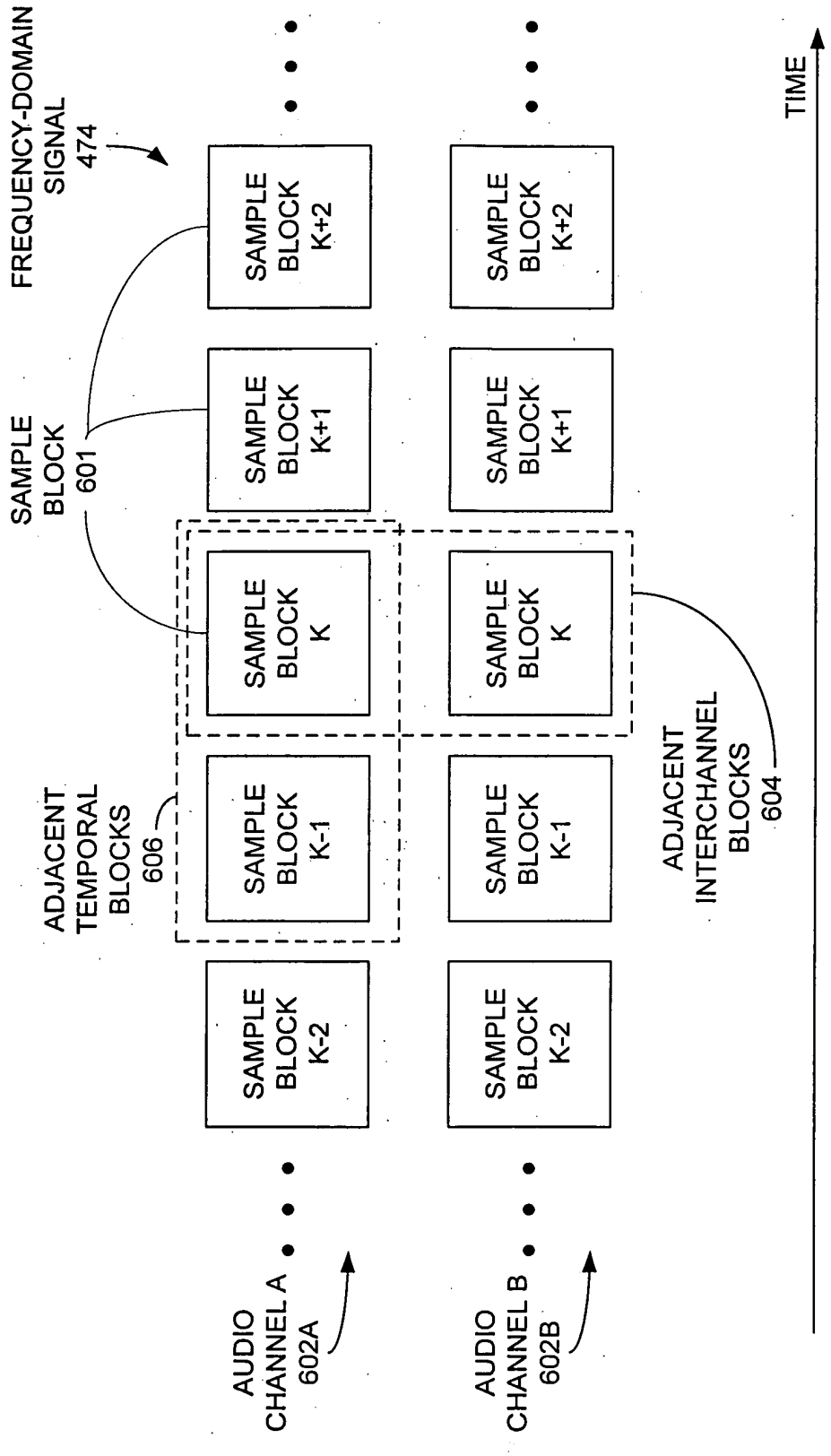
FREQUENCY-DOMAIN SIGNAL 474
SAMPLE BLOCK 601
SAMPLE BLOCK K+2
SAMPLE BLOCK K+1
SAMPLE BLOCK K
SAMPLE BLOCK K-1
SAMPLE BLOCK K-2
ADJACENT TEMPORAL BLOCKS 606
ADJACENT INTERCHANNEL BLOCKS 604
AUDIO CHANNEL A 602A
AUDIO CHANNEL B 602B
TIME

FIG. 6

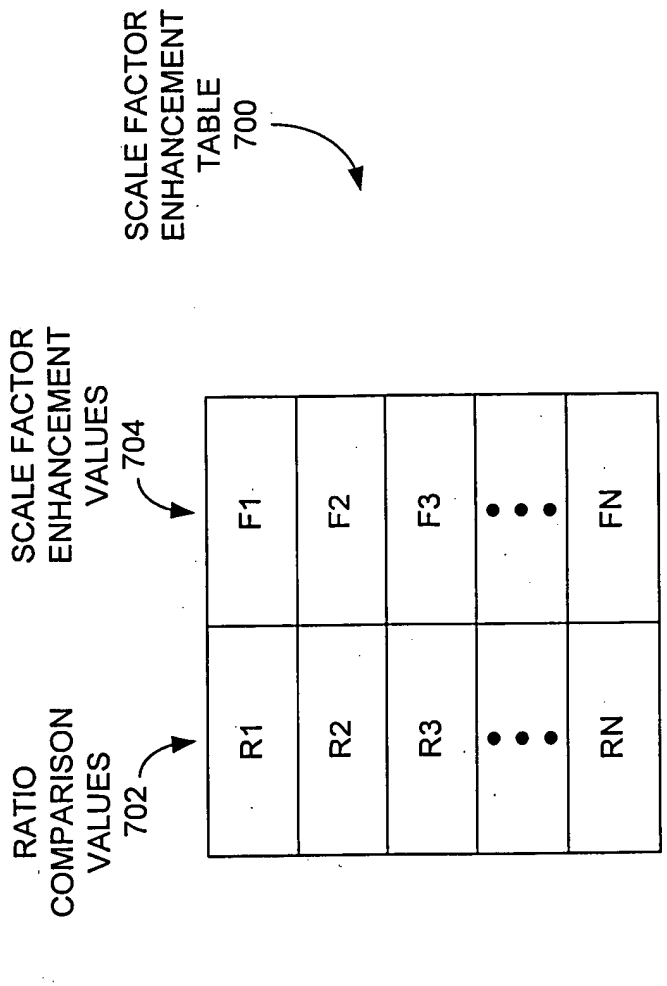
SCALE FACTOR ENHANCEMENT TABLE 700
SCALE FACTOR ENHANCEMENT VALUES 704
RATIO COMPARISON VALUES 702
F1
F2
F3
FN
R1
R2
R3
RN

FIG. 7