(12) INTERNATIONAL APPLICATION PUBLISHED UNDER THE PATENT COOPERATION TREATY (PCT)

(19) World Intellectual Property Organization
International Bureau

(43) International Publication Date
28 July 2022 (28.07.2022)

WIPO | PCT

(10) International Publication Number
WO 2022/159140 A1

(51) International Patent Classification:
F16B 37/06 (2006.01) *B23K 11/00* (2006.01)
F16B 5/04 (2006.01) *B21J 15/02* (2006.01)
F16B 4/00 (2006.01) *B21J 15/08* (2006.01)
F16B 37/04 (2006.01)

(21) International Application Number:
PCT/US2021/042756

(22) International Filing Date:
22 July 2021 (22.07.2021)

(25) Filing Language: English

(26) Publication Language: English

(30) Priority Data:
2021100934143 22 January 2021 (22.01.2021) CN

(71) Applicant: **PENN ENGINEERING & MANUFACTURING CORP.** [US/US]; 5190 Old Easton Road, Danboro, Pennsylvania 18916 (US).

(72) Inventors: **SUN, Qiang**; 26405 Mandalay Circle, Novi, Michigan 48374 (US). **CAI, Shengbao**; Room 202, No. 186, Lane 1799, Yinchun Road, Minhang District, Shanghai (CN).

(74) Agent: **GORE, Gregory J.**; Penn Engineering & Manufacturing Corp., 5190 Old Easton Road, Danboro, Pennsylvania 18916 (US).

(81) Designated States *(unless otherwise indicated, for every kind of national protection available)*: AE, AG, AL, AM, AO, AT, AU, AZ, BA, BB, BG, BH, BN, BR, BW, BY, BZ, CA, CH, CL, CN, CO, CR, CU, CZ, DE, DJ, DK, DM, DO, DZ, EC, EE, EG, ES, FI, GB, GD, GE, GH, GM, GT, HN, HR, HU, ID, IL, IN, IR, IS, IT, JO, JP, KE, KG, KH, KN, KP, KR, KW, KZ, LA, LC, LK, LR, LS, LU, LY, MA, MD, ME, MG, MK, MN, MW, MX, MY, MZ, NA, NG, NI, NO, NZ, OM, PA, PE, PG, PH, PL, PT, QA, RO, RS, RU, RW, SA, SC, SD, SE, SG, SK, SL, ST, SV, SY, TH, TJ, TM, TN, TR, TT, TZ, UA, UG, US, UZ, VC, VN, WS, ZA, ZM, ZW.

(84) Designated States *(unless otherwise indicated, for every kind of regional protection available)*: ARIPO (BW, GH, GM, KE, LR, LS, MW, MZ, NA, RW, SD, SL, ST, SZ, TZ, UG, ZM, ZW), Eurasian (AM, AZ, BY, KG, KZ, RU, TJ, TM), European (AL, AT, BE, BG, CH, CY, CZ, DE, DK, EE, ES, FI, FR, GB, GR, HR, HU, IE, IS, IT, LT, LU, LV, MC, MK, MT, NL, NO, PL, PT, RO, RS, SE, SI, SK, SM, TR), OAPI (BF, BJ, CF, CG, CI, CM, GA, GN, GQ, GW, KM, ML, MR, NE, SN, TD, TG).

(54) Title: A RIVETING METHOD AND A RIVETING STRUCTURE

FIG. 3A

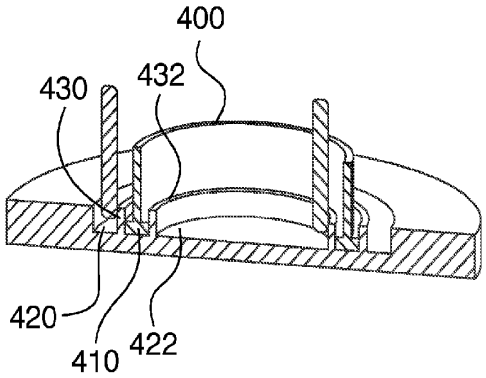

(57) Abstract: The present invention discloses a riveting method and a riveting structure. The riveting method comprises providing a plate having a first side and a second side opposite to the first side; forming a wall portion on the first side of the plate, the wall portion having a first recessed area at its first side and a second recessed area at its second side opposite to the first side; placing the fastener in the first recessed area so that the fastener is adjacent to the first side of the wall portion; and applying a force to the wall portion from the second side of the wall portion so that the wall portion is deformed so as to at least partially enclosed the fastener. This technical solution can avoid unwanted indentation on the back of the plate.

WO 2022/159140 A1

[Continued on next page]

Published:
— *with international search report (Art. 21(3))*