(12) INTERNATIONAL APPLICATION PUBLISHED UNDER THE PATENT COOPERATION TREATY (PCT)

(19) World Intellectual Property Organization
International Bureau

(43) International Publication Date
3 June 2011 (03.06.2011)

PCT

(10) International Publication Number
WO 2011/063970 A1

(51) International Patent Classification:
A24F 47/00 (2006.01)

(21) International Application Number:
PCT/EP2010/007178

(22) International Filing Date:
26 November 2010 (26.11.2010)

(25) Filing Language: English

(26) Publication Language: English

(30) Priority Data:
09252687.0 27 November 2009 (27.11.2009) EP

(71) Applicant *(for all designated States except US)*: **PHILIP MORRIS PRODUCTS S.A.** [CH/CH]; Quai Jeanrenaud 3, CH-2000 Neuchatel (CH).

(72) Inventors: **GREIM, Olivier**; Chemin des Sources, CH-1423 Villars-Burquin (CH). **PLOJOUX, Julien**; Rue Micheli-du-Crest, CH-1205 Geneva (CH). **RUSCIO, Dani**; Route de Troub 29, CH-2088 Cressier (CH). **ZUBER, Gerard**; Rue du Centre 12, CH-1752 Villars-sur-Glane (CH).

(74) Agent: **BRADFORD, Victoria, Sophie**; Reddie & Grose, 16 Theobalds Road, London WC1X 8PL (GB).

(81) Designated States *(unless otherwise indicated, for every kind of national protection available)*: AE, AG, AL, AM, AO, AT, AU, AZ, BA, BB, BG, BH, BR, BW, BY, BZ, CA, CH, CL, CN, CO, CR, CU, CZ, DE, DK, DM, DO, DZ, EC, EE, EG, ES, FI, GB, GD, GE, GH, GM, GT, HN, HR, HU, ID, IL, IN, IS, JP, KE, KG, KM, KN, KP, KR, KZ, LA, LC, LK, LR, LS, LT, LU, LY, MA, MD, ME, MG, MK, MN, MW, MX, MY, MZ, NA, NG, NI, NO, NZ, OM, PE, PG, PH, PL, PT, RO, RS, RU, SC, SD, SE, SG, SK, SL, SM, ST, SV, SY, TH, TJ, TM, TN, TR, TT, TZ, UA, UG, US, UZ, VC, VN, ZA, ZM, ZW.

(84) Designated States *(unless otherwise indicated, for every kind of regional protection available)*: ARIPO (BW, GH, GM, KE, LR, LS, MW, MZ, NA, SD, SL, SZ, TZ, UG, ZM, ZW), Eurasian (AM, AZ, BY, KG, KZ, MD, RU, TJ, TM), European (AL, AT, BE, BG, CH, CY, CZ, DE, DK, EE, ES, FI, FR, GB, GR, HR, HU, IE, IS, IT, LT, LU, LV, MC, MK, MT, NL, NO, PL, PT, RO, RS, SE, SI, SK, SM, TR), OAPI (BF, BJ, CF, CG, CI, CM, GA, GN, GQ, GW, ML, MR, NE, SN, TD, TG).

Published:

— *with international search report (Art. 21(3))*

(54) **Title**: AN ELECTRICALLY HEATED SMOKING SYSTEM WITH INTERNAL OR EXTERNAL HEATER

Figure 1

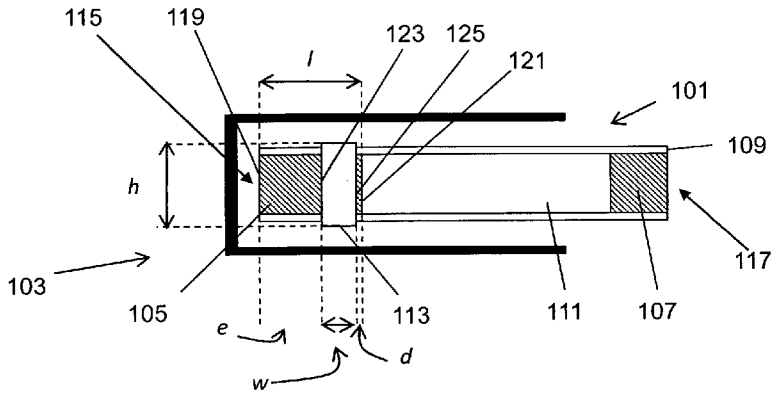

(57) **Abstract**: There is provided an electrically heated smoking system (103, 203) for receiving an aerosol-forming substrate (105, 205). The system comprises a heater for heating the substrate to form the aerosol, and the heater comprises a heating element (113, 213, 214). The electrically heated smoking system (103, 203) and the heating element (113, 213, 214) are arranged such that, when the aerosol-forming substrate (105, 205) is received in the electrically heated smoking system, the heating element (113, 213, 214) extends a distance only partially along the length of the aerosol forming-substrate, and the heating element is positioned towards the downstream end of the aerosol-forming substrate.

WO 2011/063970 A1