(12) INTERNATIONAL APPLICATION PUBLISHED UNDER THE PATENT COOPERATION TREATY (PCT)

(19) World Intellectual Property Organization
International Bureau

(43) International Publication Date
02 October 2025 (02.10.2025)

WIPO | PCT

(10) International Publication Number
WO 2025/203018 A1

(51) International Patent Classification:
B01D 29/68 (2006.01) *B08B 9/045* (2006.01)
B08B 9/035 (2006.01) *C02F 1/00* (2023.01)

(21) International Application Number:
PCT/IL2025/050218

(22) International Filing Date:
06 March 2025 (06.03.2025)

(25) Filing Language: English

(26) Publication Language: English

(30) Priority Data:
18/620,468 28 March 2024 (28.03.2024) US
18/627,072 04 April 2024 (04.04.2024) US

(71) Applicant: **AMIAD WATER SYSTEMS LTD.** [IL/IL]; D.N. Galil Elyon 1, 1233500 Kibbutz Amiad (IL).

(72) Inventors: **OREN, Yagil**; Hacla 16/1, PO box 85, 1230500 Kibbutz Kfar HaNassi (IL). **MATITYAHU, Noa**; Arava 6, 3090906 Zichron Yaakov (IL). **ATIAS, Kfir**; Halon 262, PO box 75, 1293500 Amnun (IL). **BEN HORIN, Raanan**; 1513500 Kibbutz Bet Zera (IL). **KLASS, Riki**; HaTamar 114, 1528000 Kfar Hitim (IL).

(74) Agent: **GLAZBERG, Ziv**; Glazberg Applebaum & Co., Advocates & Patent Attorneys, 3 HaYetzira St., Shap House 21st floor, 5252141 Ramat Gan (IL).

(81) Designated States *(unless otherwise indicated, for every kind of national protection available)*: AE, AG, AL, AM, AO, AT, AU, AZ, BA, BB, BG, BH, BN, BR, BW, BY, BZ, CA, CH, CL, CN, CO, CR, CU, CV, CZ, DE, DJ, DK, DM, DO, DZ, EC, EE, EG, ES, FI, GB, GD, GE, GH, GM, GT, HN, HR, HU, ID, IL, IN, IQ, IR, IS, IT, JM, JO, JP, KE, KG, KH, KN, KP, KR, KW, KZ, LA, LC, LK, LR, LS, LU, LY, MA, MD, MG, MK, MN, MU, MW, MX, MY, MZ, NA,

(54) Title: FILTRATION SYSTEM SELF CLEANING MECHANISM

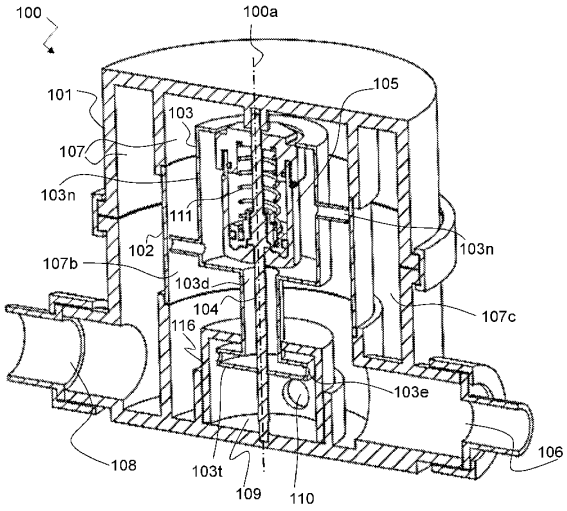

FIG. 1A

(57) Abstract: A self-cleaning mechanism for a filtration system, being disclosed, comprising a filter element positioned in a filtration chamber and a suction scanner for cleaning the filter element upon activation of a cleaning session, wherein a linear motion of the suction scanner between an initial position and a final position is automatically regulated by a linear displacement regulator comprising (i) a regulative -fluid compartment in liquid communication with a regulative flow-restrictor; and (ii) a regulative-fluid compression element linearly comoving with the suction scanner for enforcing a regulative-fluid filled in the regulative-fluid compartment, to flow through the regulative flow-restrictor. Further being disclosed are a filtration system comprising said self-cleaning mechanism, and a method for regulating the linear displacement of a suction scanner of a self-cleaning filtration system by said linear displacement regulator.

WO 2025/203018 A1

[Continued on next page]

NG, NI, NO, NZ, OM, PA, PE, PG, PH, PL, PT, QA, RO, RS, RU, RW, SA, SC, SD, SE, SG, SK, SL, ST, SV, SY, TH, TJ, TM, TN, TR, TT, TZ, UA, UG, US, UY, UZ, VC, VN, WS, ZA, ZM, ZW.

(84) **Designated States** *(unless otherwise indicated, for every kind of regional protection available)*: ARIPO (BW, CV, GH, GM, KE, LR, LS, MW, MZ, NA, RW, SC, SD, SL, ST, SZ, TZ, UG, ZM, ZW), Eurasian (AM, AZ, BY, KG, KZ, RU, TJ, TM), European (AL, AT, BE, BG, CH, CY, CZ, DE, DK, EE, ES, FI, FR, GB, GR, HR, HU, IE, IS, IT, LT, LU, LV, MC, ME, MK, MT, NL, NO, PL, PT, RO, RS, SE, SI, SK, SM, TR), OAPI (BF, BJ, CF, CG, CI, CM, GA, GN, GQ, GW, KM, ML, MR, NE, SN, TD, TG).

Published:

— *with international search report (Art. 21(3))*