PCT

WORLD INTELLECTUAL PROPERTY ORGANIZATION
International Bureau

INTERNATIONAL APPLICATION PUBLISHED UNDER THE PATENT COOPERATION TREATY (PCT)

(51) International Patent Classification 6 : B63B 25/00 | A1

(11) International Publication Number: WO 98/14362

(43) International Publication Date: 9 April 1998 (09.04.98)

(21) International Application Number: PCT/US97/17484

(22) International Filing Date: 26 September 1997 (26.09.97)

(30) Priority Data: 08/724,364 1 October 1996 (01.10.96) US

(71) Applicant: ENRON LNG DEVELOPMENT CORP. [US/US]; 1400 Smith Street, Houston, TX 77002 (US).

(72) Inventors: STENNING, David, G.; 611–46 Avenue S.W., Calgary, Alberta T2S 1B9 (CA). CRAN, James, A.; 625 Sifton Boulevard S.W., Calgary, Alberta T2T 2K8 (CA).

(74) Agent: ROBINS, W., Ronald; Vinson & Elkins, L.L.P., 1001 Fannin Street, 2300 First City Tower, Houston, TX 77002–6760 (US).

(81) Designated States: AU, BR, CA, CN, IL, JP, KR, MX, NO, NZ, PL, RU, SG, TR, VN, European patent (AT, BE, CH, DE, DK, ES, FI, FR, GB, GR, IE, IT, LU, MC, NL, PT, SE).

Published
With international search report.

(54) Title: SHIP BASED GAS TRANSPORT SYSTEM

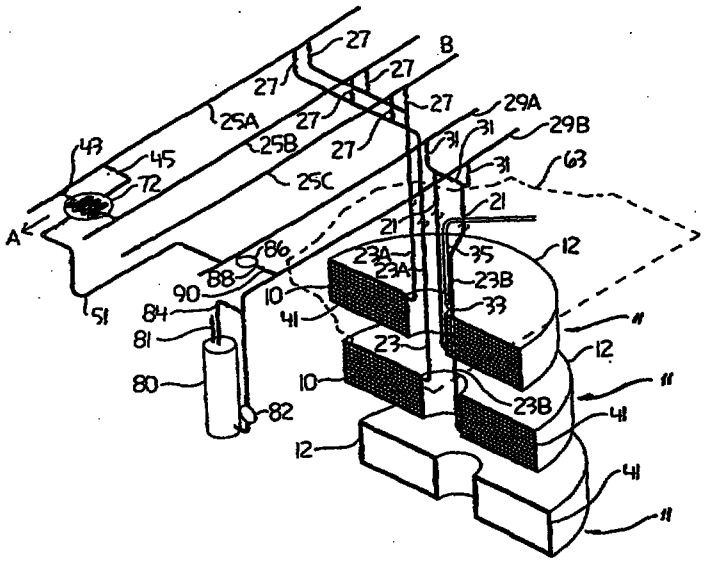

(57) Abstract

A gas storage system (11) formed of a continuous pipe (10) wound in plural layers, each layer having plural loops. The pipe may be distributed within a container (12), which may serve as a carousel for winding the pipe and as a gas containment device. When containers, each containing a continuous pipe, are stacked upon each other, the weight of upper containers may be born by the walls (16, 18) of lower containers, thus preventing lower layers of pipe from suffering stresses due to crushing by upper layers. A method of transporting gas to a gas distribution facility including obtaining a supply of gas at a gas supply point remote from the gas distribution facility, injecting the gas into a continuous pipe bent to form plural layers, each layer including plural loops of pipe, transporting the continuous pipe along with the gas to the gas distribution facility preferably in a ship (62) and discharging the gas.