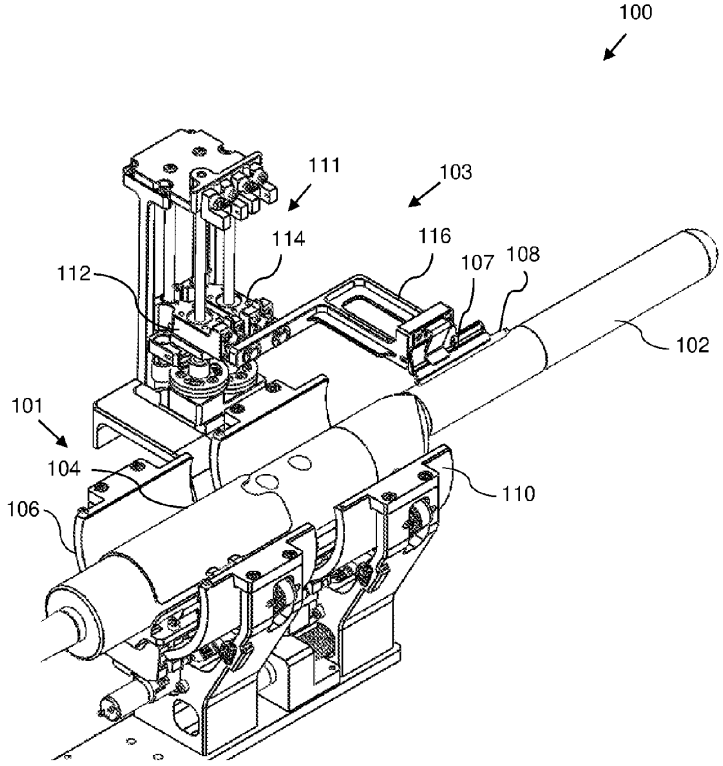

Fig. 1

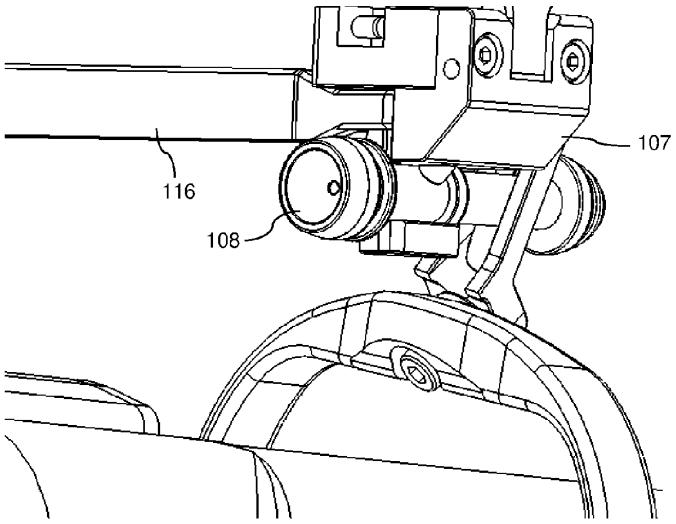

Fig. 2A

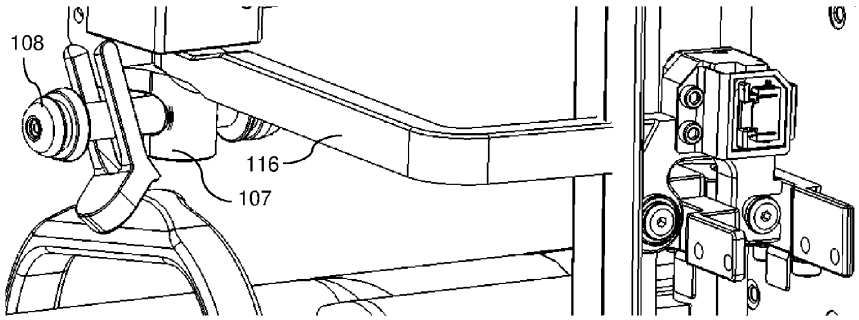

Fig. 2B

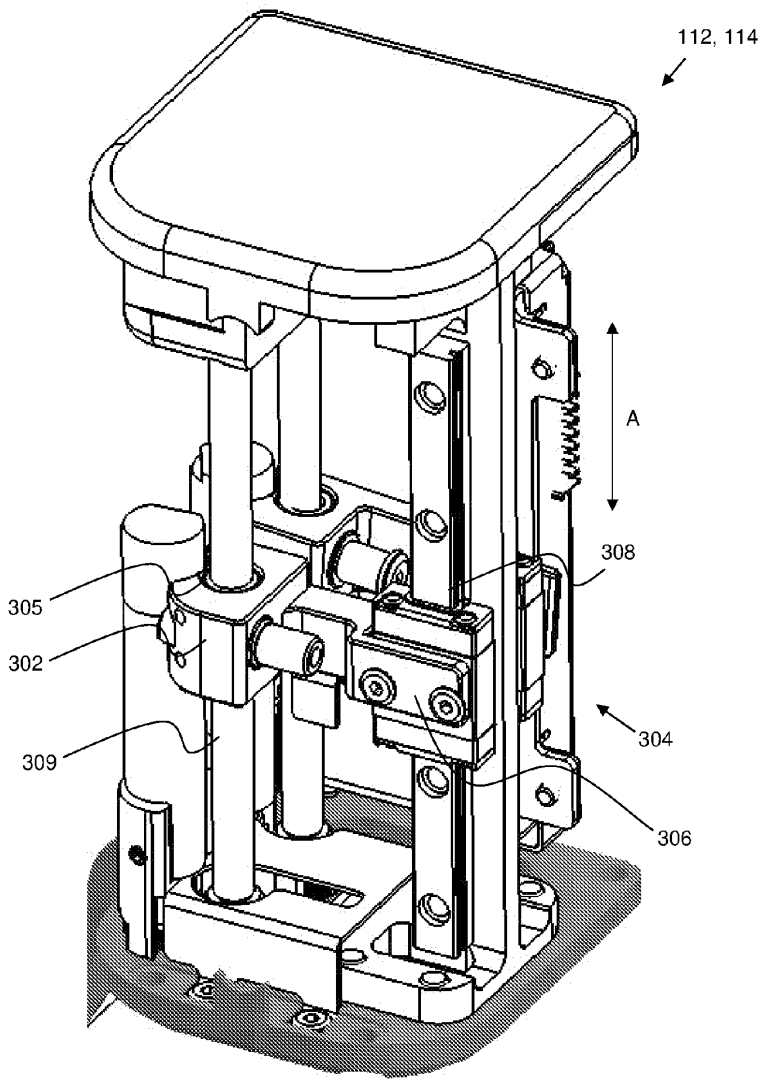

Fig. 3

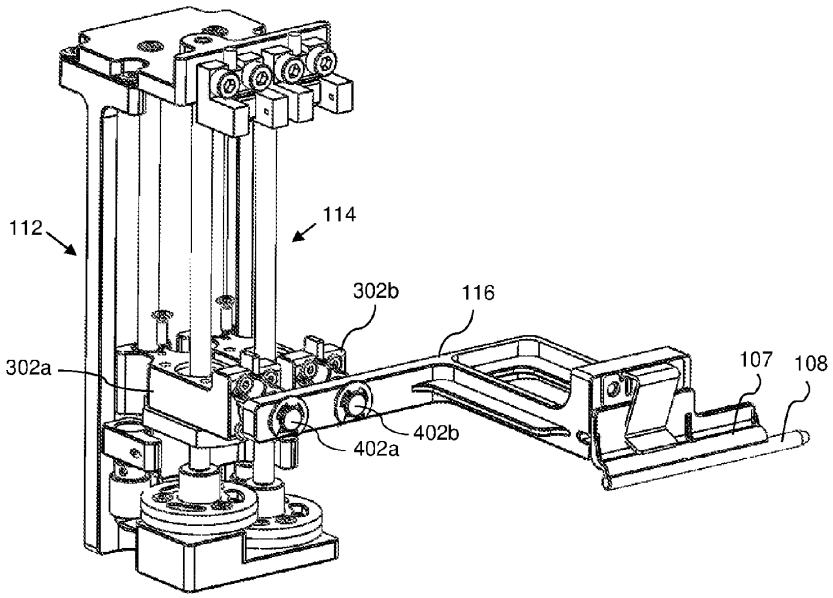

Fig. 4

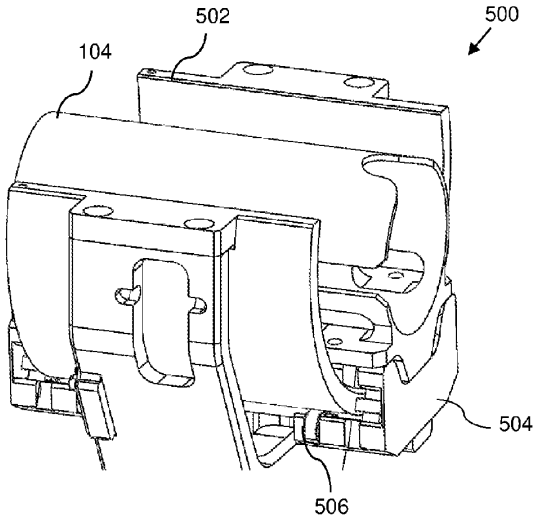

Fig. 5

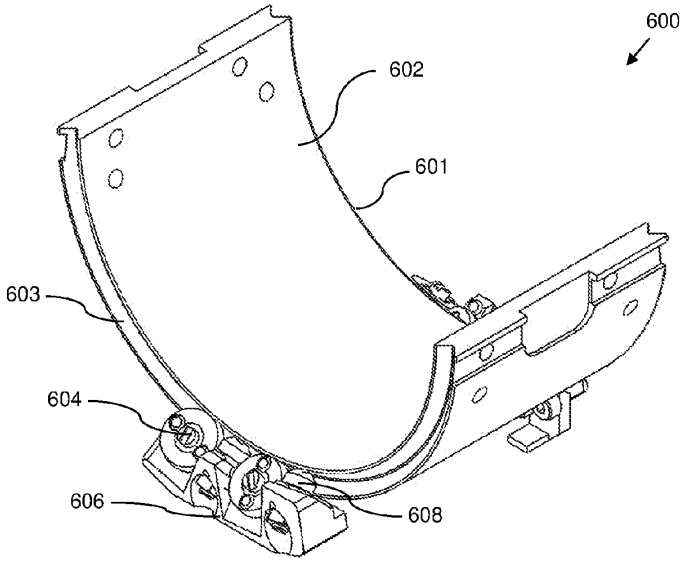

Fig. 6A

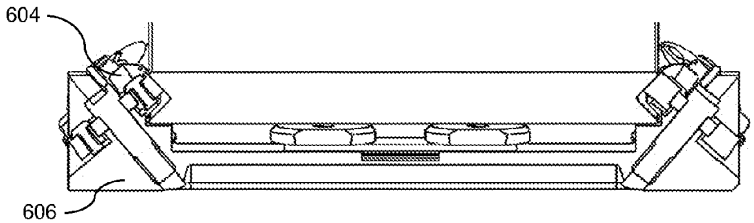

Fig. 6B

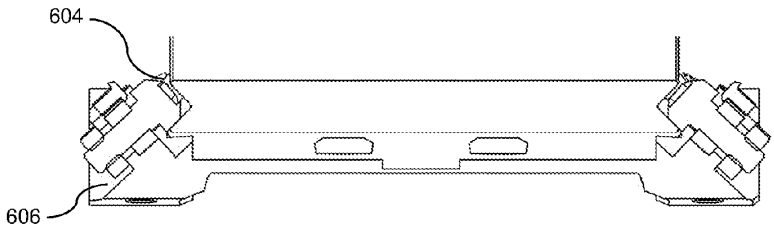

Fig. 6C

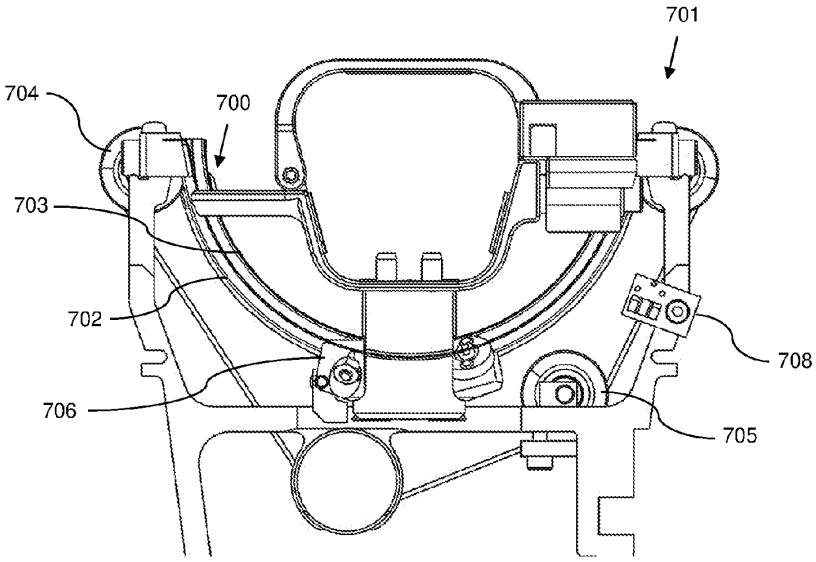

Fig. 7A

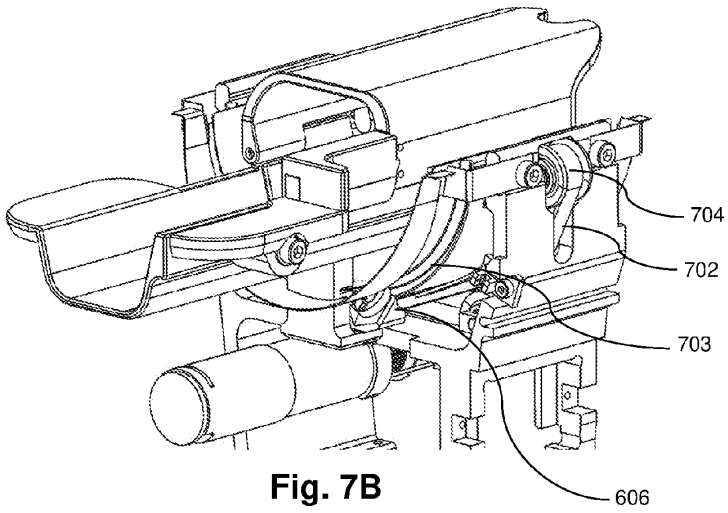

Fig. 7B

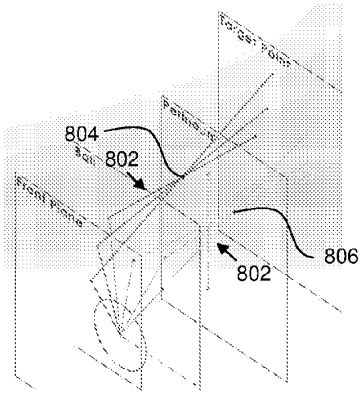
804
802
806
802

Fig. 8A

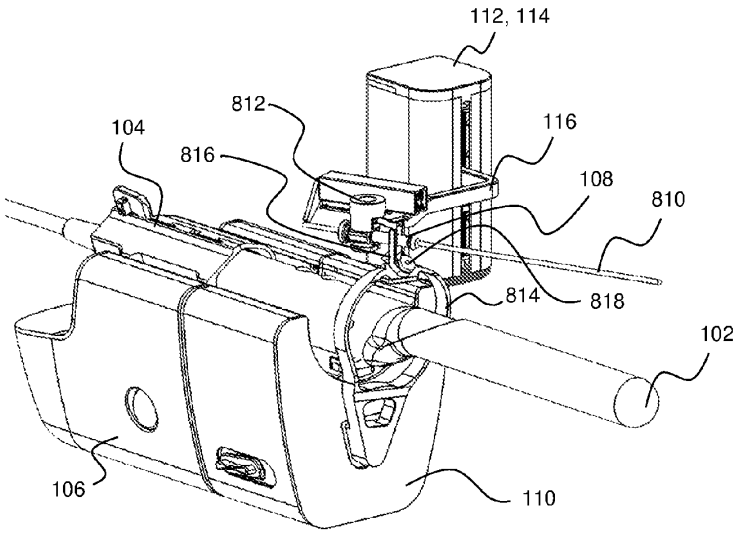
112, 114
812
104
816
116
108
810
814
818
102
106
110

Fig. 8B

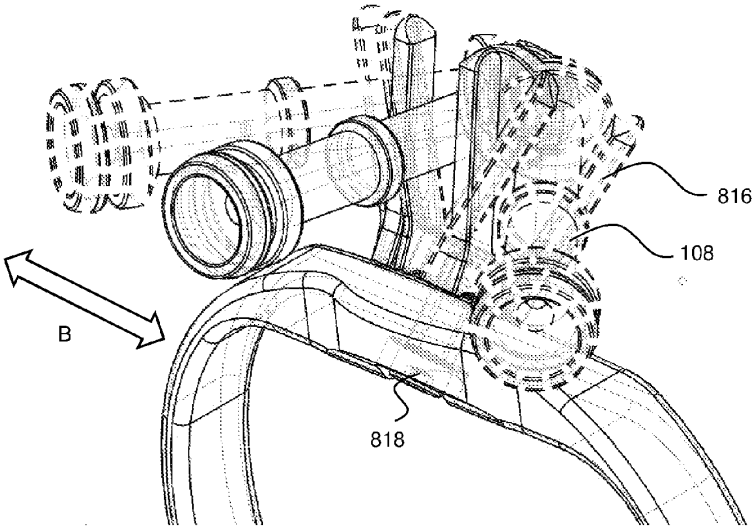

Fig. 8C

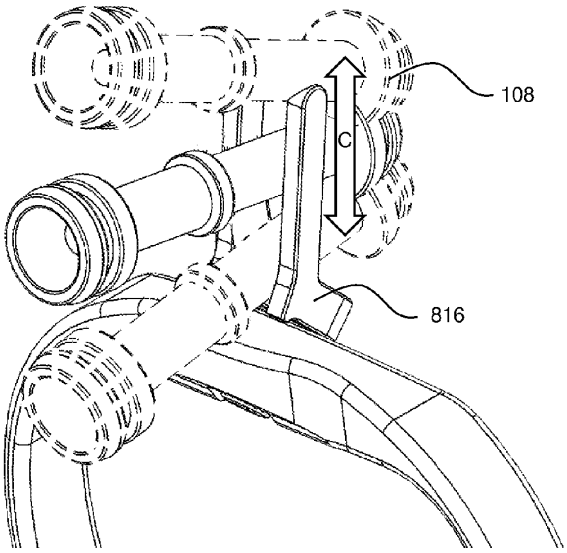

Fig. 8D

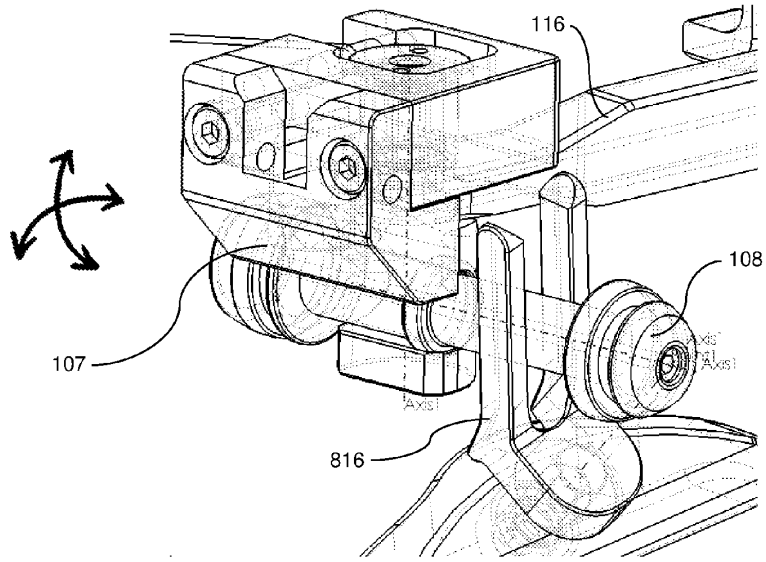

Fig. 9A

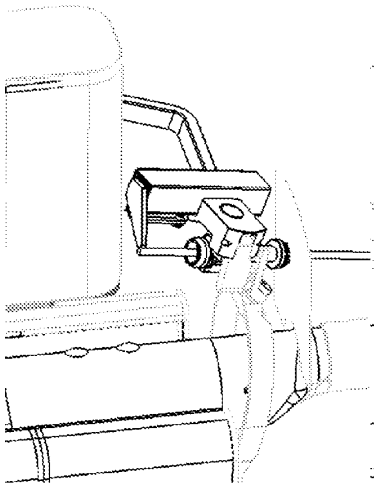

Fig. 9B

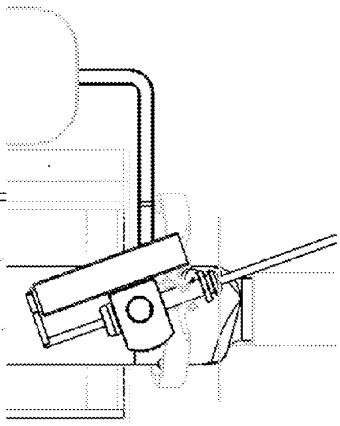

Fig. 9C

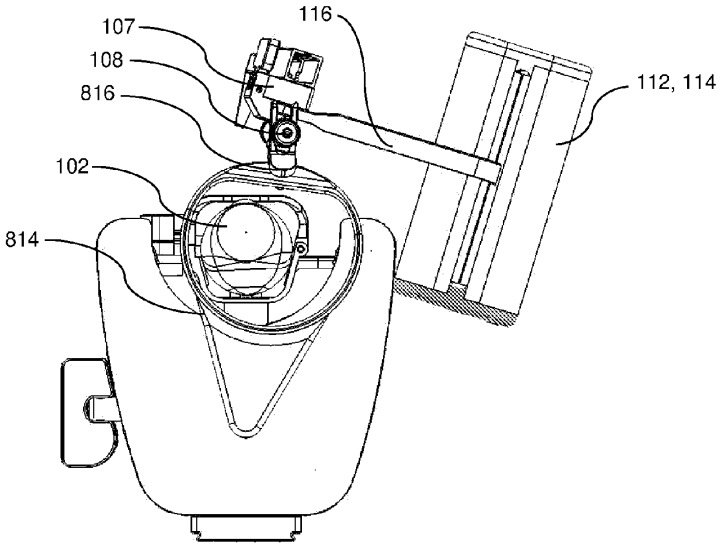

Fig. 9D

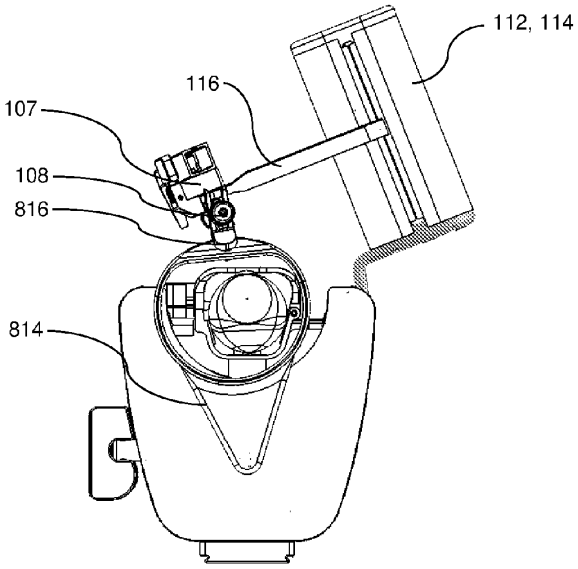

Fig. 9E

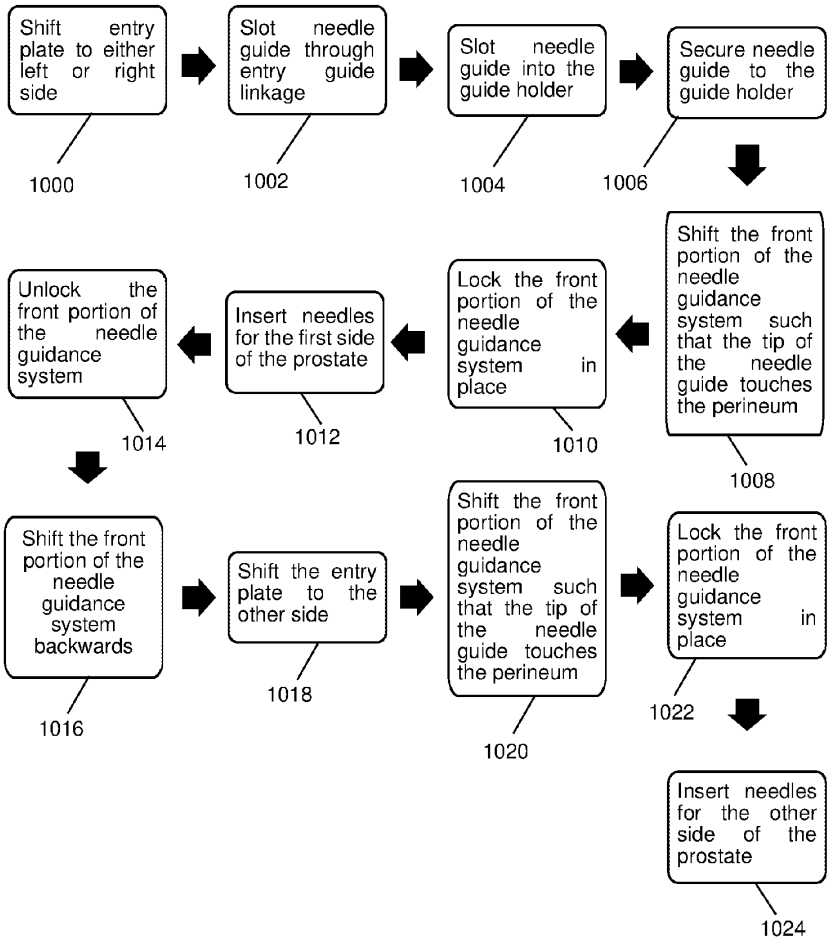
Shift entry plate to either left or right side
1000
Slot needle guide through entry guide linkage
1002
Slot needle guide into the guide holder
1004
Secure needle guide to the guide holder
1006
Shift the front portion of the needle guidance system such that the tip of the needle guide touches the perineum
1008
Lock the front portion of the needle guidance system in place
1010
Insert needles for the first side of the prostate
1012
Unlock the front portion of the needle guidance system
1014
Shift the front portion of the needle guidance system backwards
1016
Shift the entry plate to the other side
1018
Shift the front portion of the needle guidance system such that the tip of the needle guide touches the perineum
1020
Lock the front portion of the needle guidance system in place
1022
Insert needles for the other side of the prostate
1024

Fig. 10

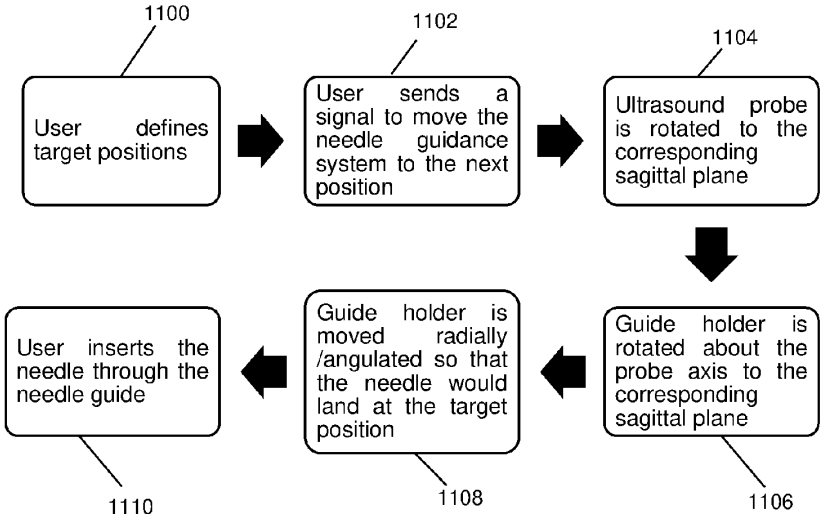
1100
User defines target positions
1102
User sends a signal to move the needle guidance system to the next position
1104
Ultrasound probe is rotated to the corresponding sagittal plane
Guide holder is rotated about the probe axis to the corresponding sagittal plane
1106
Guide holder is moved radially /angulated so that the needle would land at the target position
1108
User inserts the needle through the needle guide
1110

Fig. 11

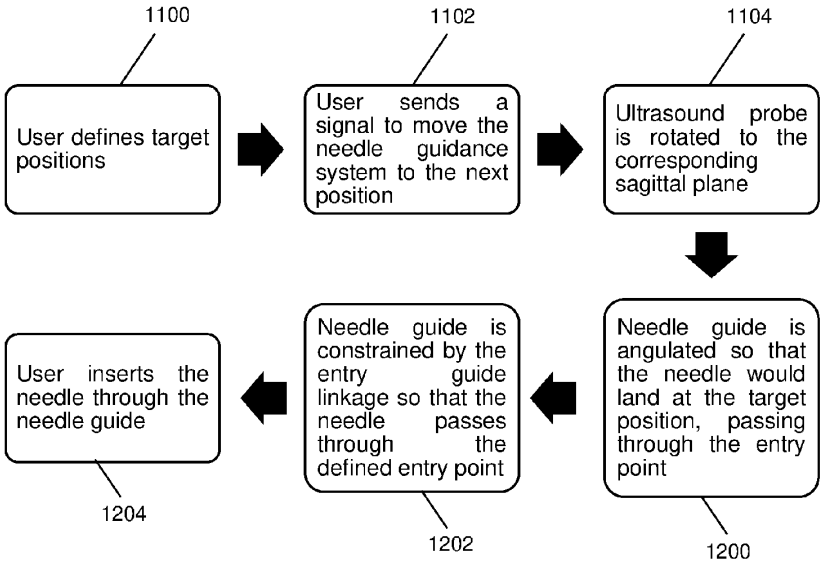
1100
User defines target positions
1102
User sends a signal to move the needle guidance system to the next position
1104
Ultrasound probe is rotated to the corresponding sagittal plane
Needle guide is angulated so that the needle would land at the target position, passing through the entry point
1200
Needle guide is constrained by the entry guide linkage so that the needle passes through the defined entry point
1202
User inserts the needle through the needle guide
1204

Fig. 12

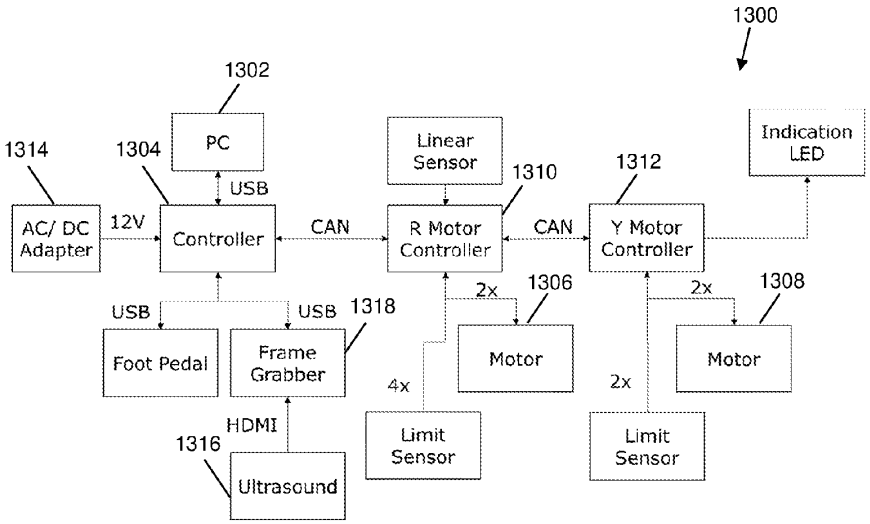
1300
1302
PC
1314
1304
Linear Sensor
1310
1312
Indication LED
USB
AC/ DC Adapter
12V
Controller
CAN
R Motor Controller
CAN
Y Motor Controller
2x
1306
2x
1308
USB
USB
1318
Foot Pedal
Frame Grabber
Motor
Motor
4x
2x
HDMI
1316
Limit Sensor
Limit Sensor
Ultrasound

Fig. 13

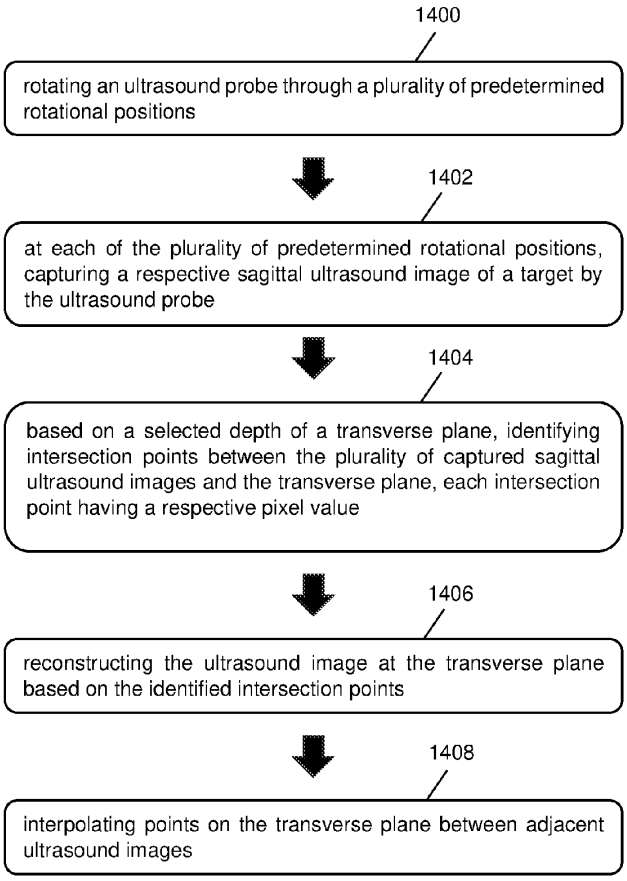
1400
rotating an ultrasound probe through a plurality of predetermined rotational positions
1402
at each of the plurality of predetermined rotational positions, capturing a respective sagittal ultrasound image of a target by the ultrasound probe
1404
based on a selected depth of a transverse plane, identifying intersection points between the plurality of captured sagittal ultrasound images and the transverse plane, each intersection point having a respective pixel value
1406
reconstructing the ultrasound image at the transverse plane based on the identified intersection points
1408
interpolating points on the transverse plane between adjacent ultrasound images

Fig. 14

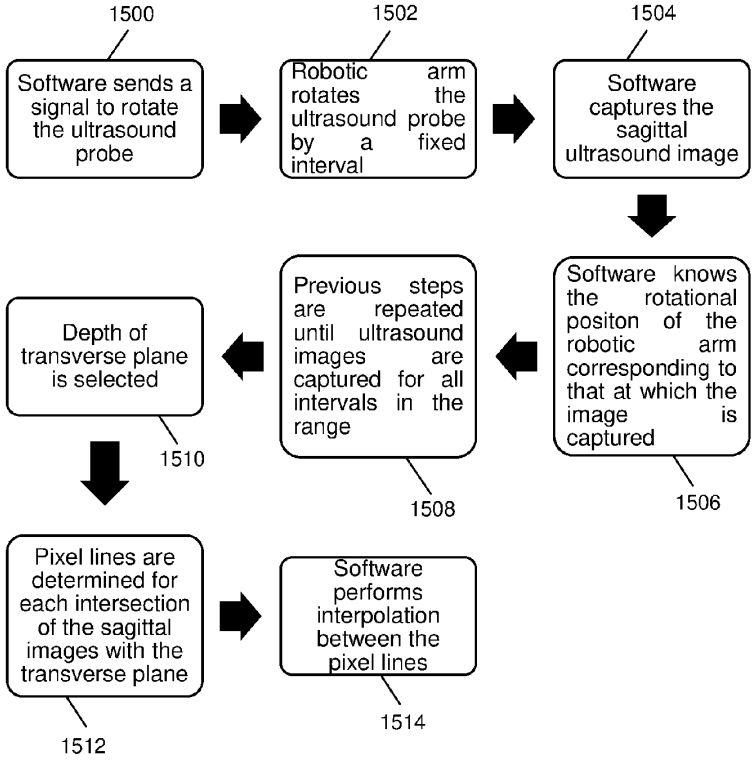
1500
Software sends a signal to rotate the ultrasound probe
1502
Robotic arm rotates the ultrasound probe by a fixed interval
1504
Software captures the sagittal ultrasound image
Software knows the rotational positon of the robotic arm corresponding to that at which the image is captured
1506
Previous steps are repeated until ultrasound images are captured for all intervals in the range
1508
Depth of transverse plane is selected
1510
Pixel lines are determined for each intersection of the sagittal images with the transverse plane
1512
Software performs interpolation between the pixel lines
1514

Fig. 15

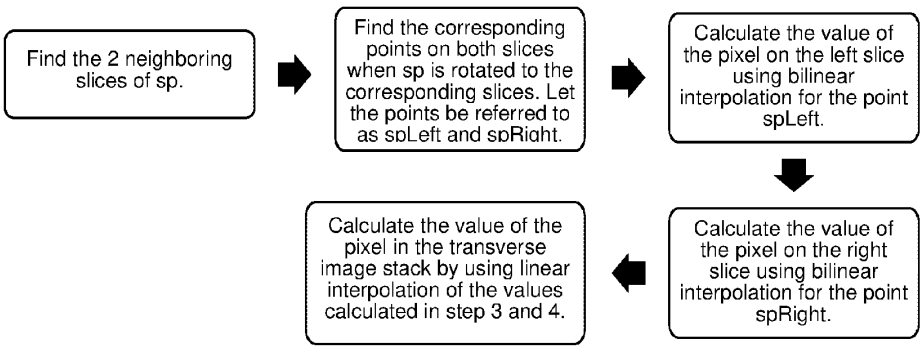
Find the 2 neighboring slices of sp.
Find the corresponding points on both slices when sp is rotated to the corresponding slices. Let the points be referred to as spLeft and spRight.
Calculate the value of the pixel on the left slice using bilinear interpolation for the point spLeft.
Calculate the value of the pixel on the right slice using bilinear interpolation for the point spRight.
Calculate the value of the pixel in the transverse image stack by using linear interpolation of the values calculated in step 3 and 4.

Fig. 16

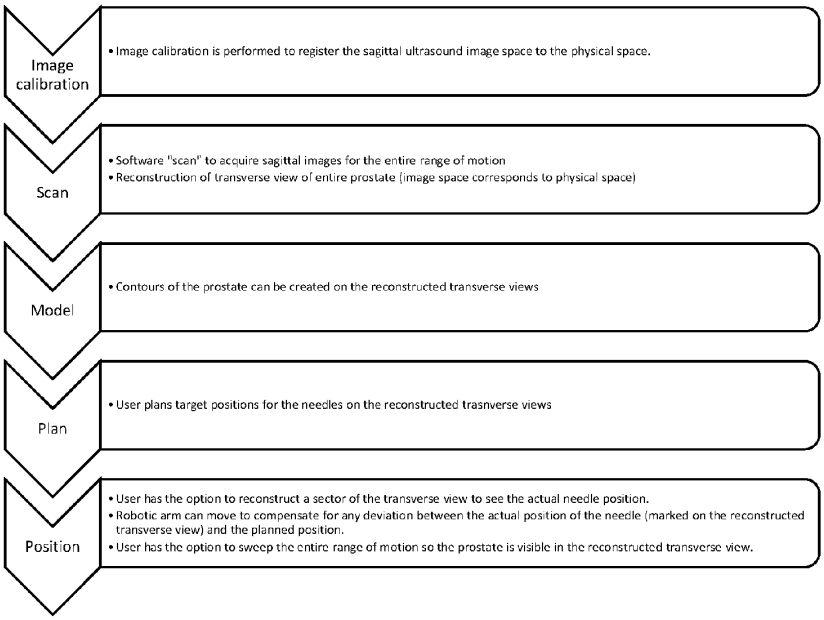
Image calibration
• Image calibration is performed to register the sagittal ultrasound image space to the physical space.
Scan
• Software "scan" to acquire sagittal images for the entire range of motion
• Reconstruction of transverse view of entire prostate (image space corresponds to physical space)
Model
• Contours of the prostate can be created on the reconstructed transverse views
Plan
• User plans target positions for the needles on the reconstructed trasnverse views
Position
• User has the option to reconstruct a sector of the transverse view to see the actual needle position.
• Robotic arm can move to compensate for any deviation between the actual position of the needle (marked on the reconstructed transverse view) and the planned position.
• User has the option to sweep the entire range of motion so the prostate is visible in the reconstructed transverse view.

Fig. 17

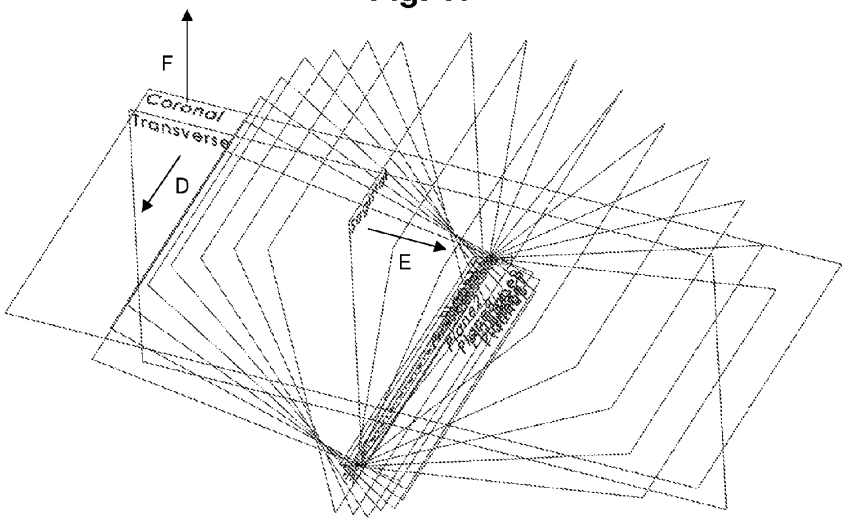
F
Coronal
Transverse
D
E

Fig. 18

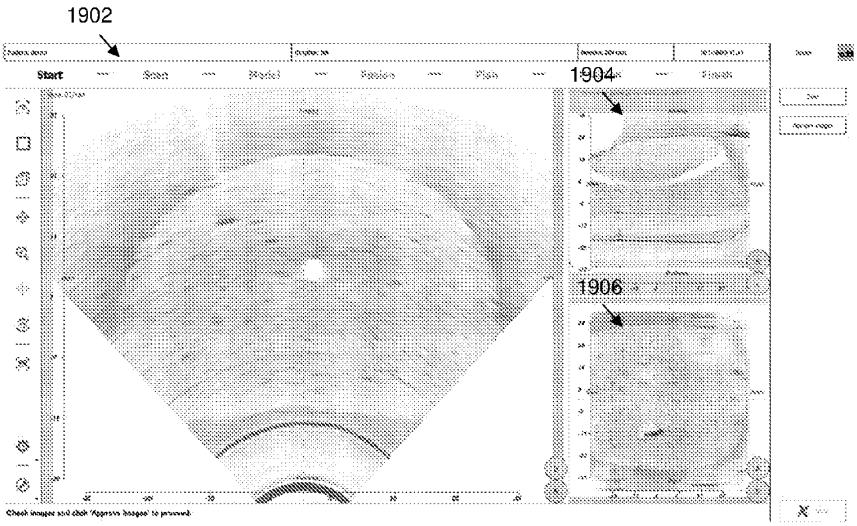

Fig. 19A

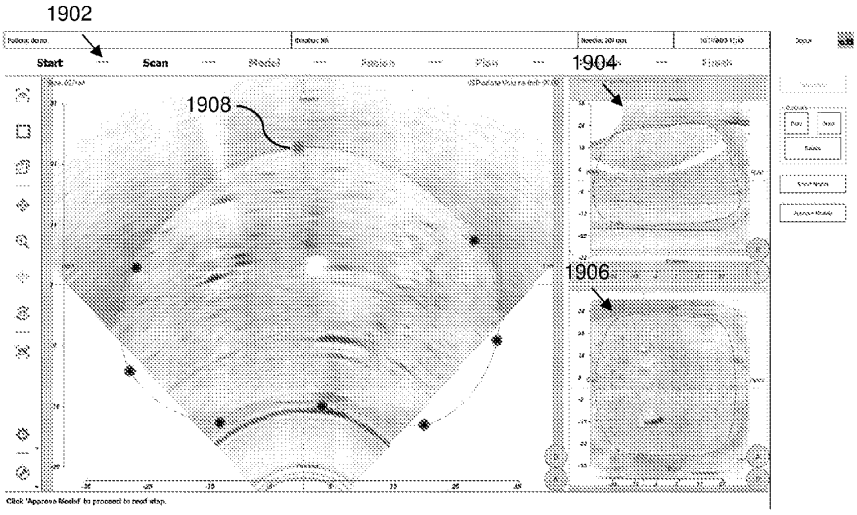

Fig. 19B

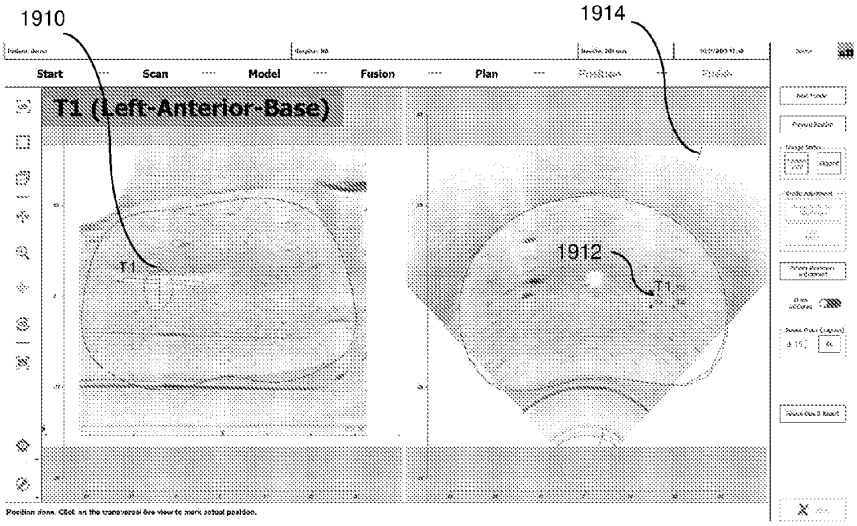
1910
1914
Start
Scan
Model
Fusion
Plan
T1 (Left-Anterior-Base)
T1
1912
T1

Fig. 19C

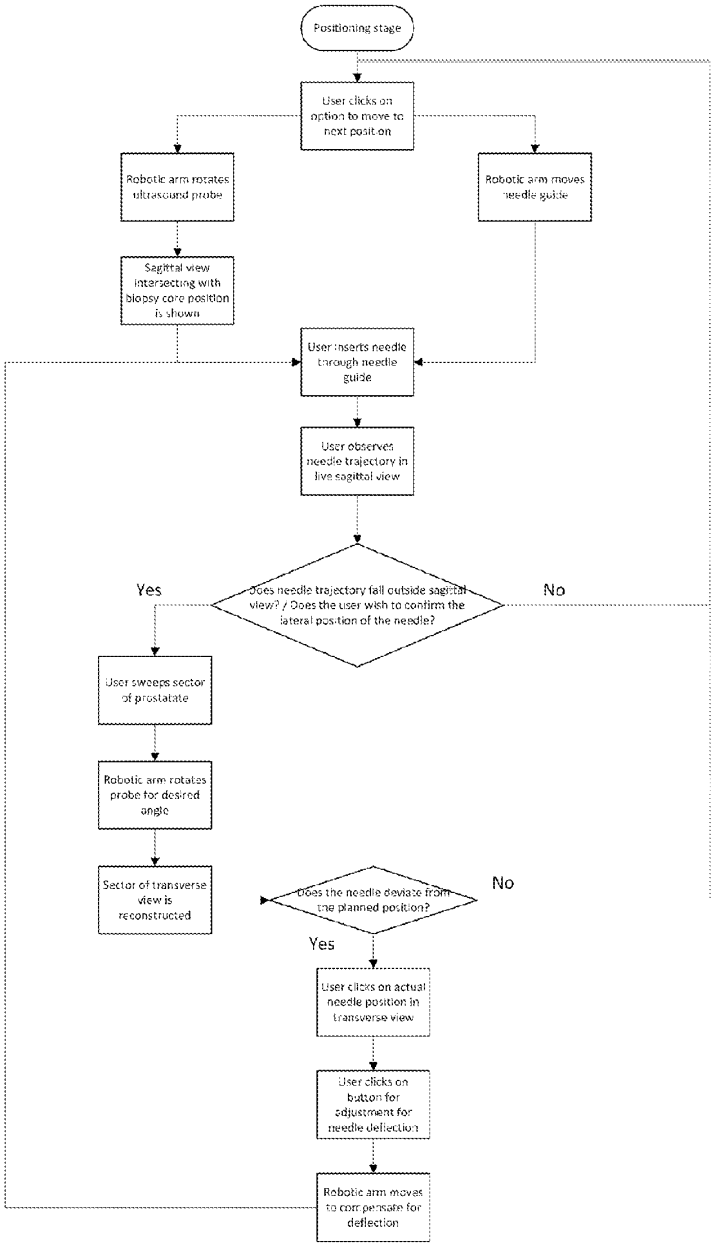
Positioning stage
User clicks on option to move to next position
Robotic arm rotates ultrasound probe
Robotic arm moves needle guide
Sagittal view intersecting with biopsy core position is shown
User inserts needle through needle guide
User observes needle trajectory in live sagittal view
Does needle trajectory fall outside sagittal view? / Does the user wish to confirm the lateral position of the needle?
Yes
No
User sweeps sector of prostate
Robotic arm rotates probe for desired angle
Sector of transverse view is reconstructed
Does the needle deviate from the planned position?
No
Yes
User clicks on actual needle position in transverse view
User clicks on button for adjustment for needle deflection
Robotic arm moves to compensate for deflection

Fig. 20A

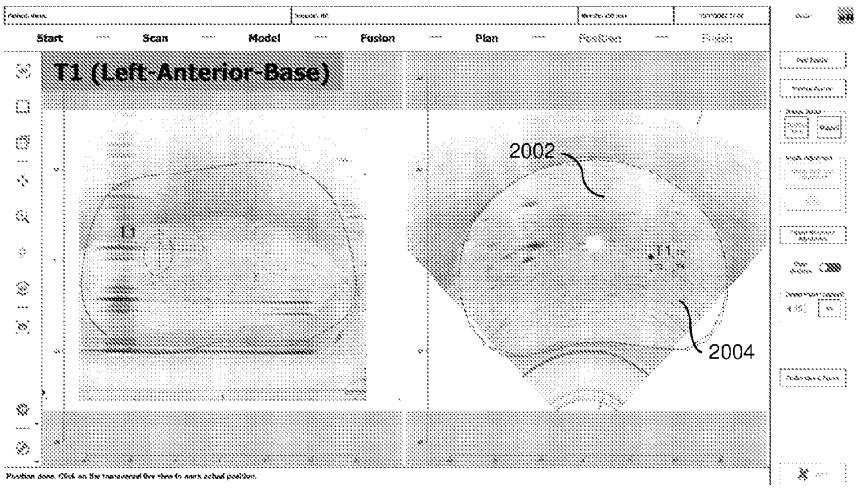

Fig. 20B

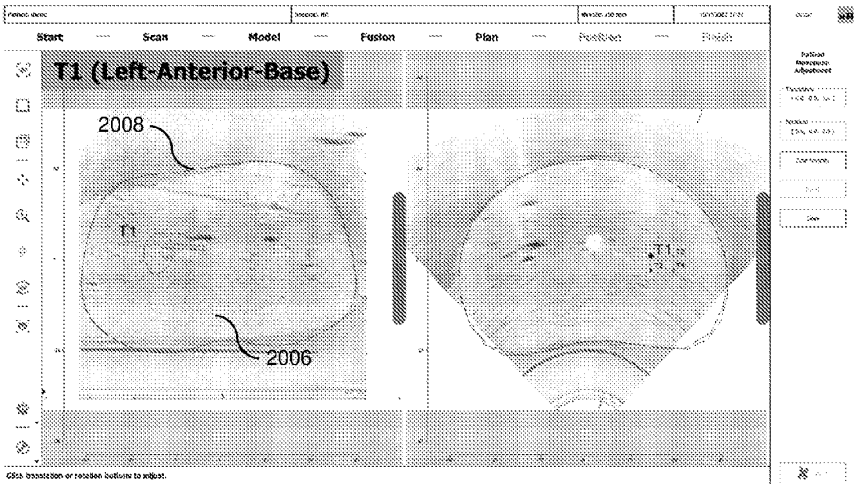

Fig. 20C