Figure 1

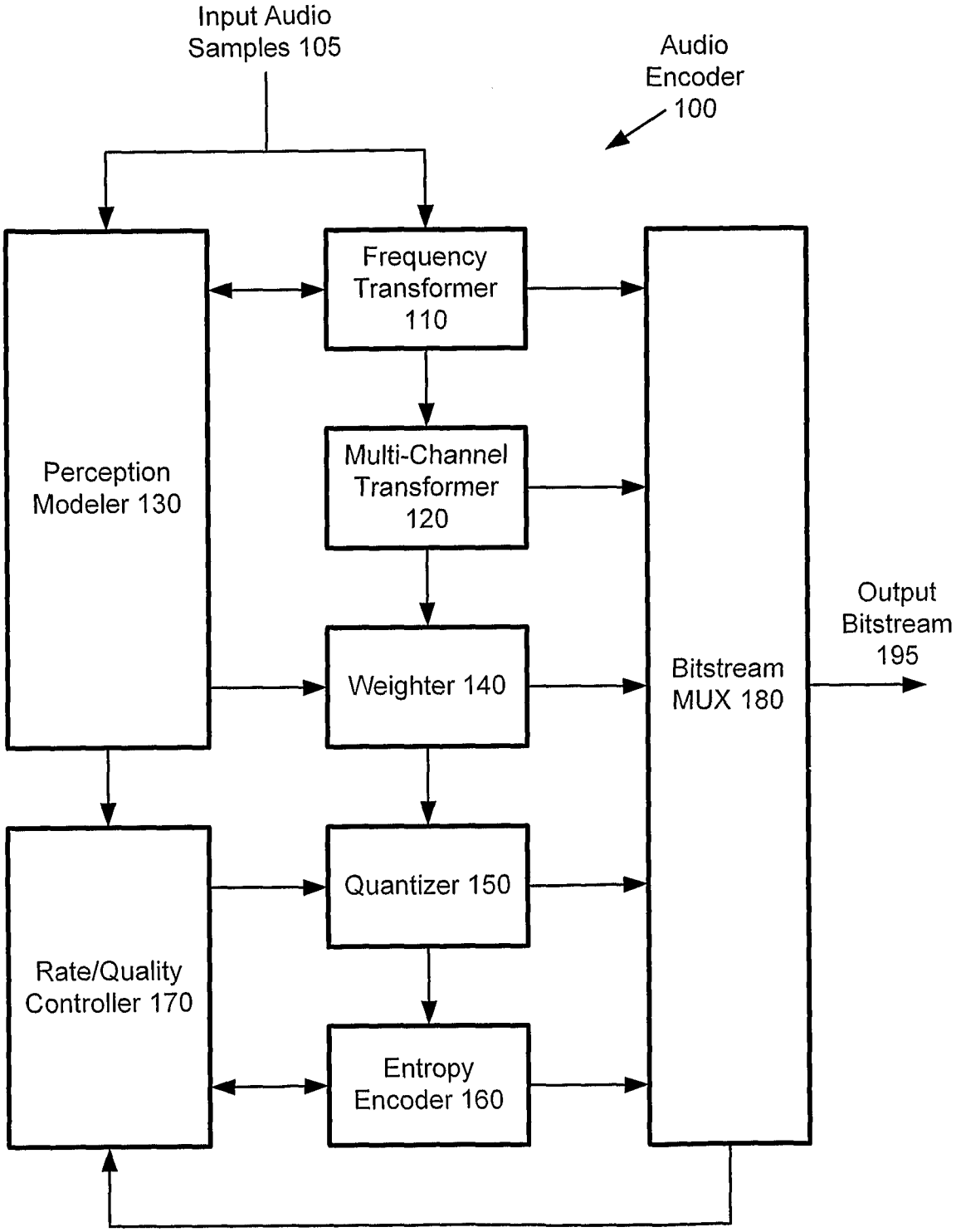
Input Audio Samples 105
Audio Encoder 100
Frequency Transformer 110
Multi-Channel Transformer 120
Perception Modeler 130
Weighter 140
Quantizer 150
Rate/Quality Controller 170
Entropy Encoder 160
Bitstream MUX 180
Output Bitstream 195

Figure 2

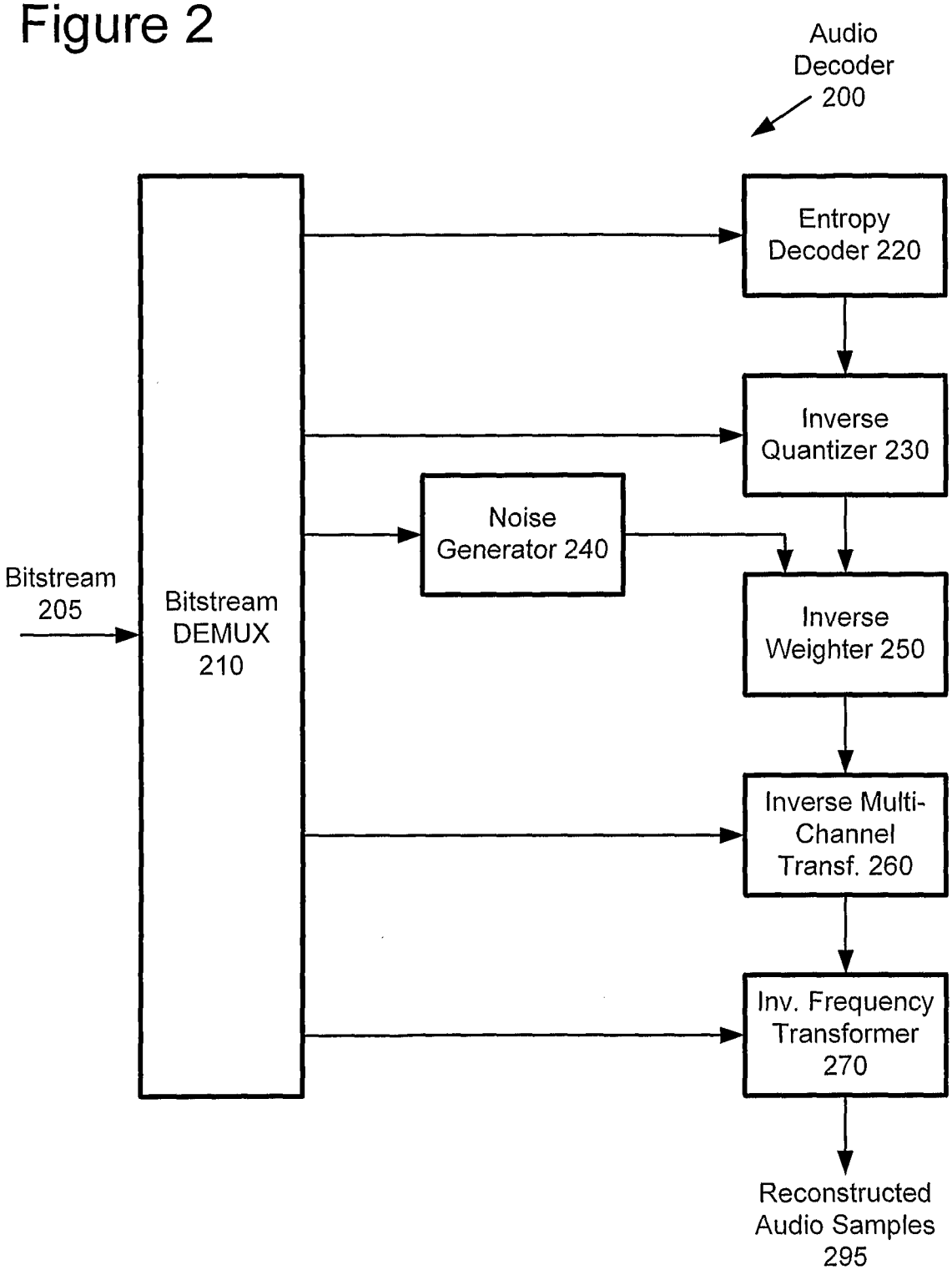
Audio Decoder 200
Entropy Decoder 220
Inverse Quantizer 230
Noise Generator 240
Inverse Weighter 250
Inverse Multi-Channel Transf. 260
Inv. Frequency Transformer 270
Bitstream 205
Bitstream DEMUX 210
Reconstructed Audio Samples 295

Figure 3

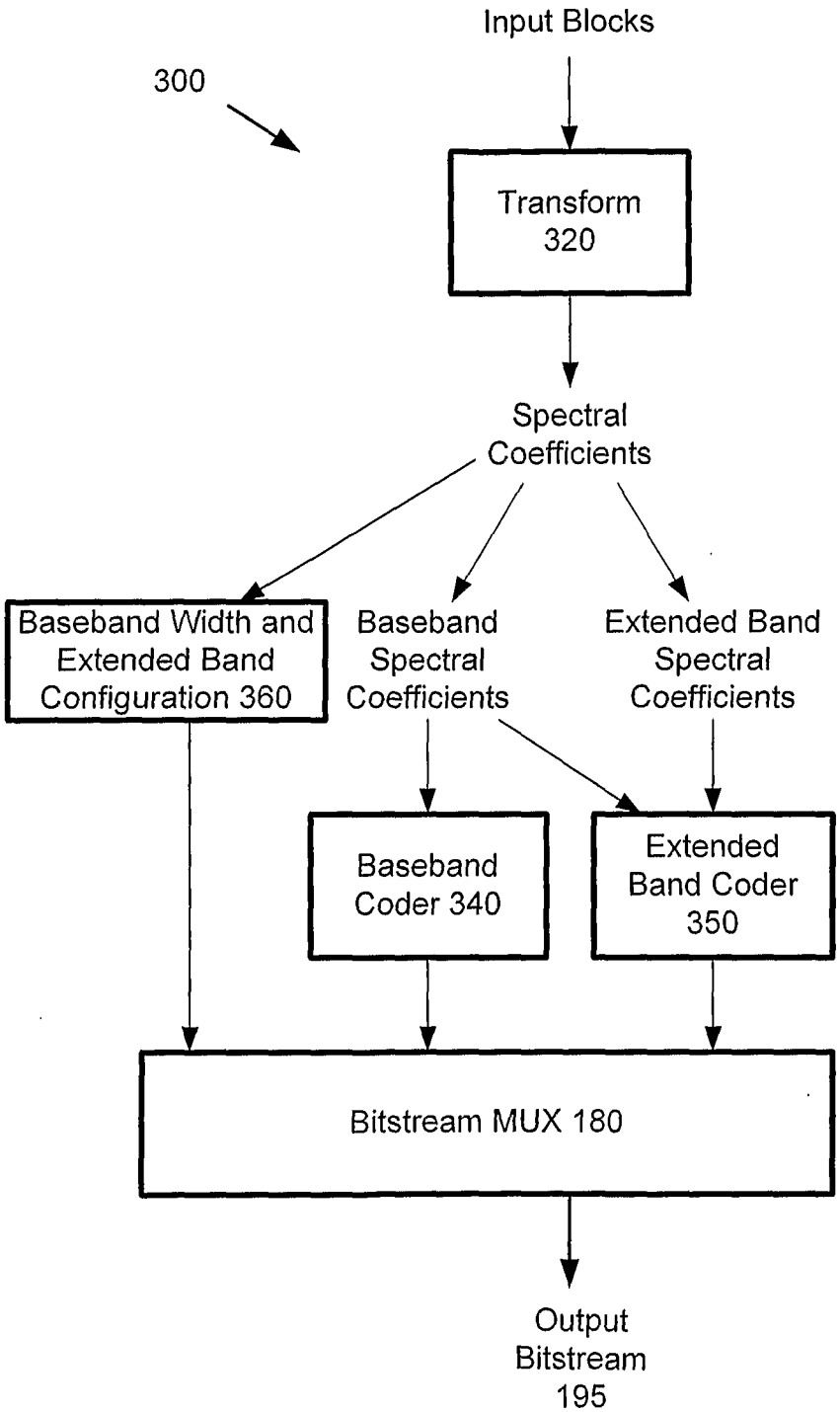
Input Blocks
300
Transform 320
Spectral Coefficients
Baseband Width and Extended Band Configuration 360
Baseband Spectral Coefficients
Extended Band Spectral Coefficients
Baseband Coder 340
Extended Band Coder 350
Bitstream MUX 180
Output Bitstream 195

Figure 4

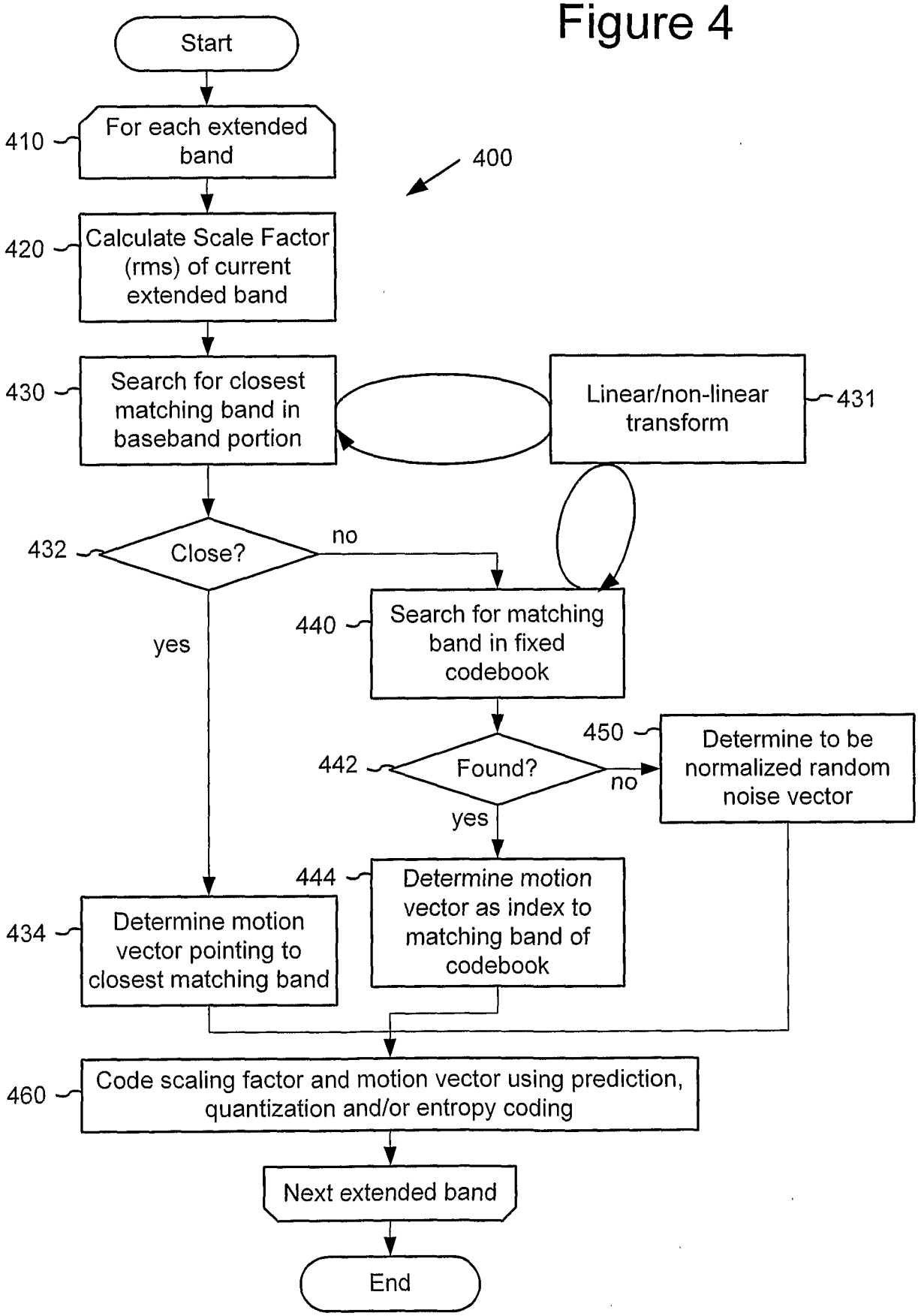
Start
For each extended band
410
400
Calculate Scale Factor (rms) of current extended band
420
Search for closest matching band in baseband portion
430
Linear/non-linear transform
431
Close?
432
no
yes
Search for matching band in fixed codebook
440
Found?
442
no
yes
450
Determine to be normalized random noise vector
Determine motion vector as index to matching band of codebook
444
Determine motion vector pointing to closest matching band
434
Code scaling factor and motion vector using prediction, quantization and/or entropy coding
460
Next extended band
End

Figure 5

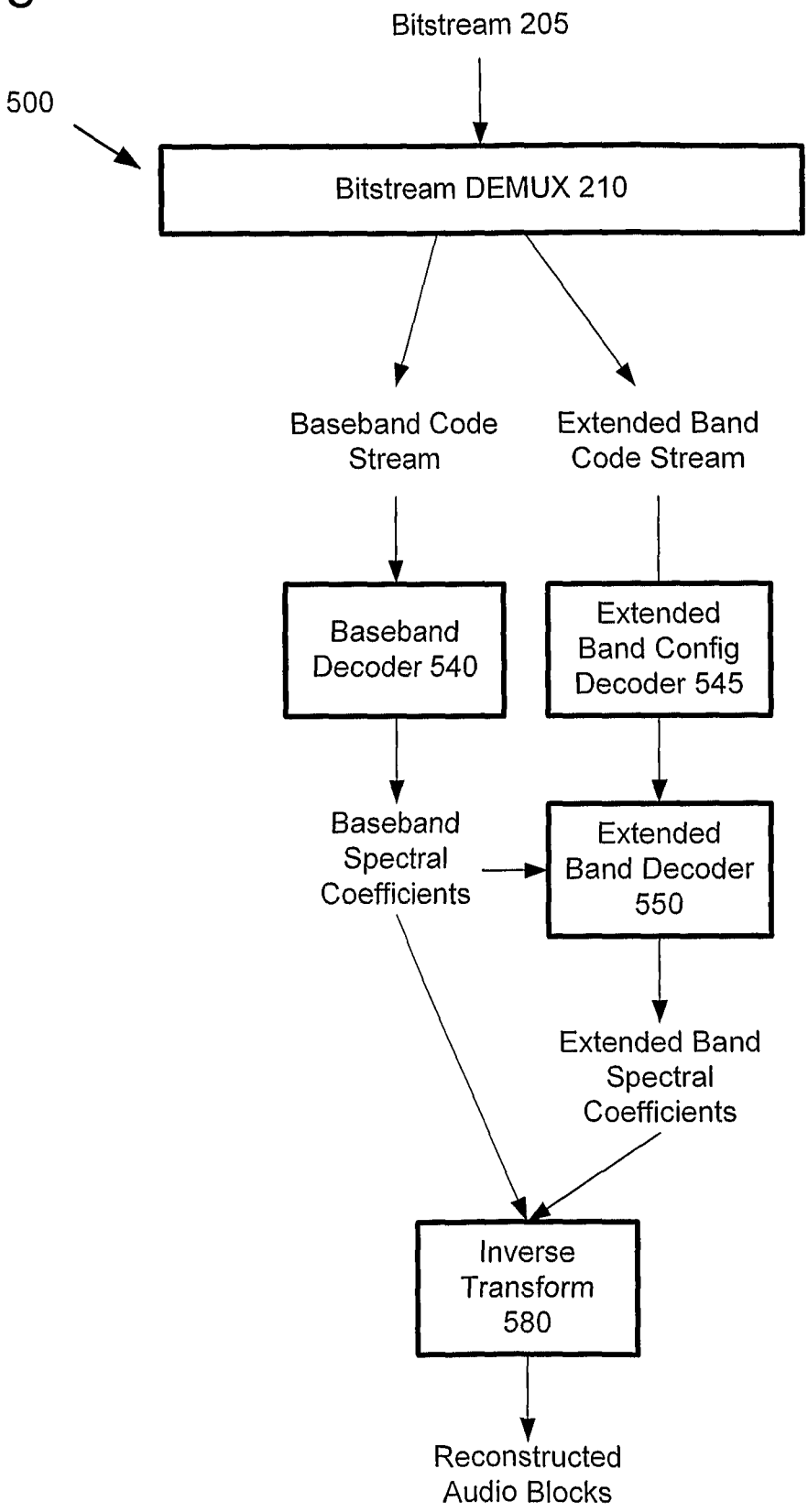
Bitstream 205
500
Bitstream DEMUX 210
Baseband Code Stream
Extended Band Code Stream
Baseband Decoder 540
Extended Band Config Decoder 545
Baseband Spectral Coefficients
Extended Band Decoder 550
Extended Band Spectral Coefficients
Inverse Transform 580
Reconstructed Audio Blocks

Figure 6

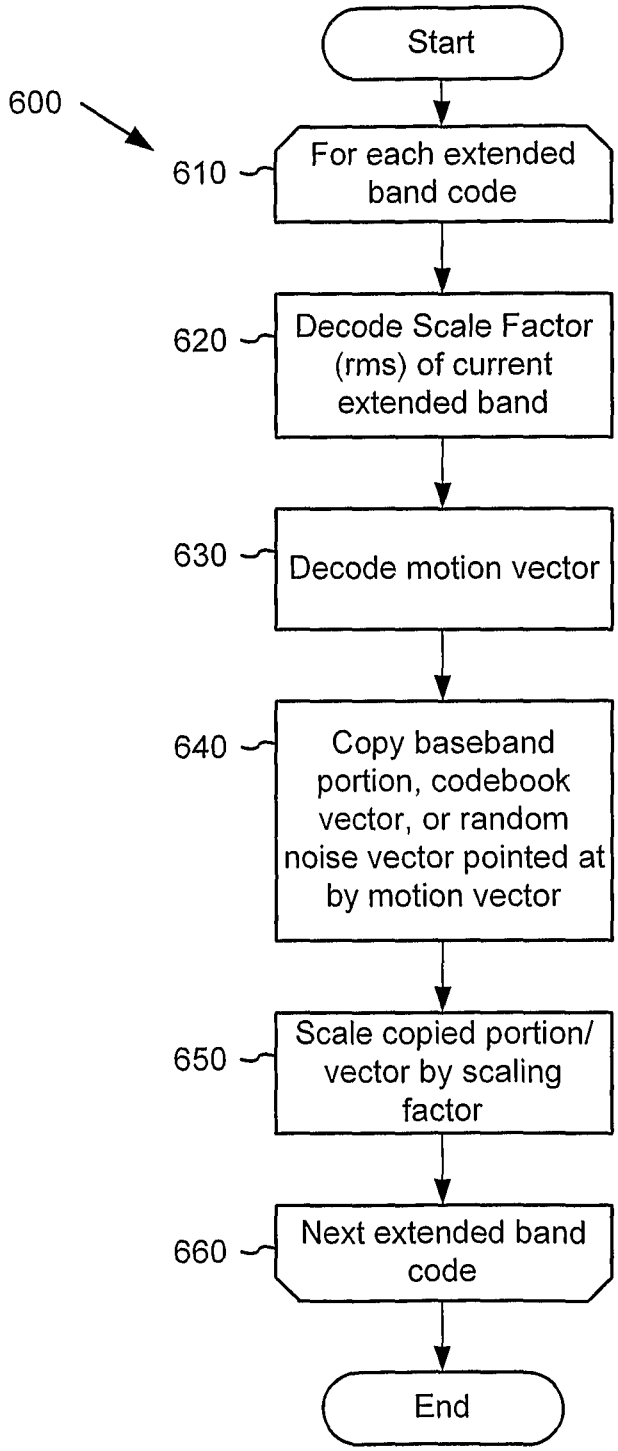
Start
600
610
For each extended band code
620
Decode Scale Factor (rms) of current extended band
630
Decode motion vector
640
Copy baseband portion, codebook vector, or random noise vector pointed at by motion vector
650
Scale copied portion/ vector by scaling factor
660
Next extended band code
End

Figure 7

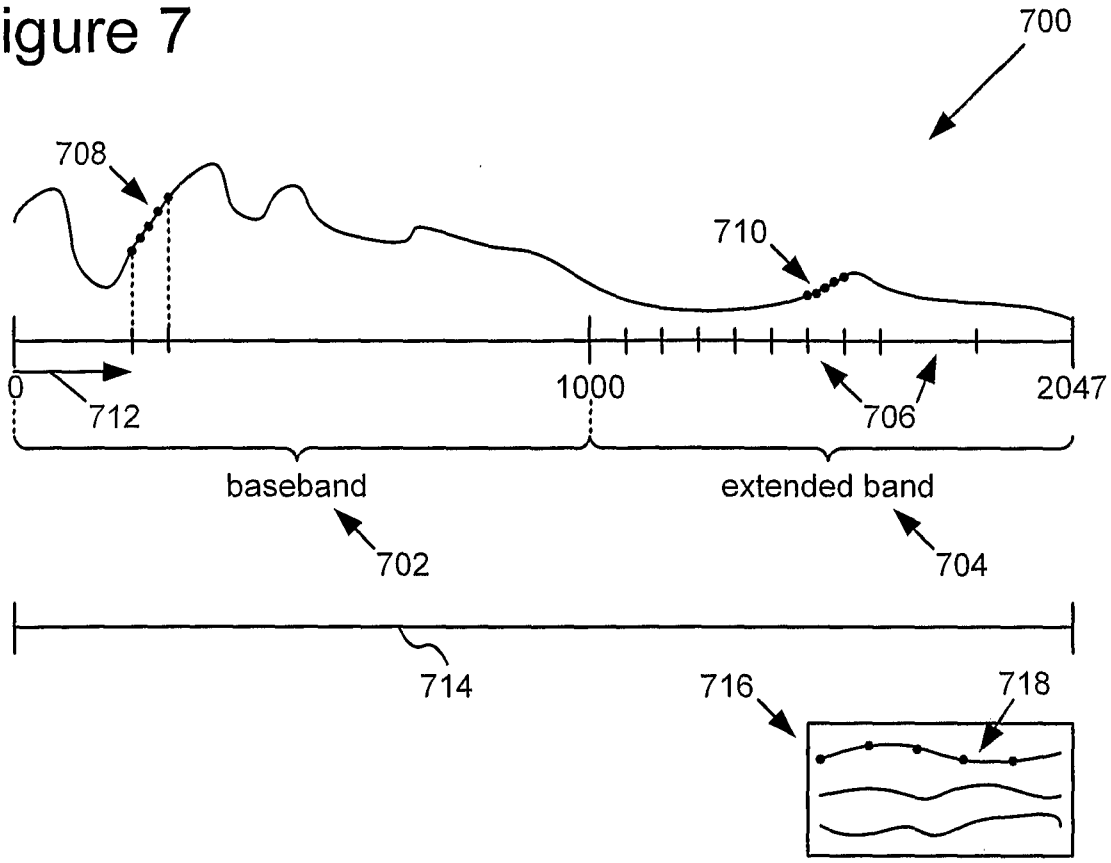

Figure 8

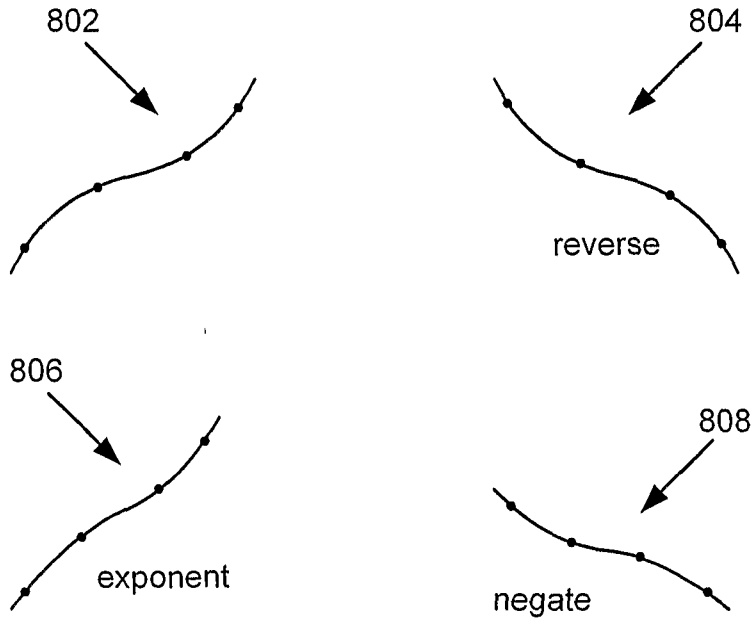

Figure 9

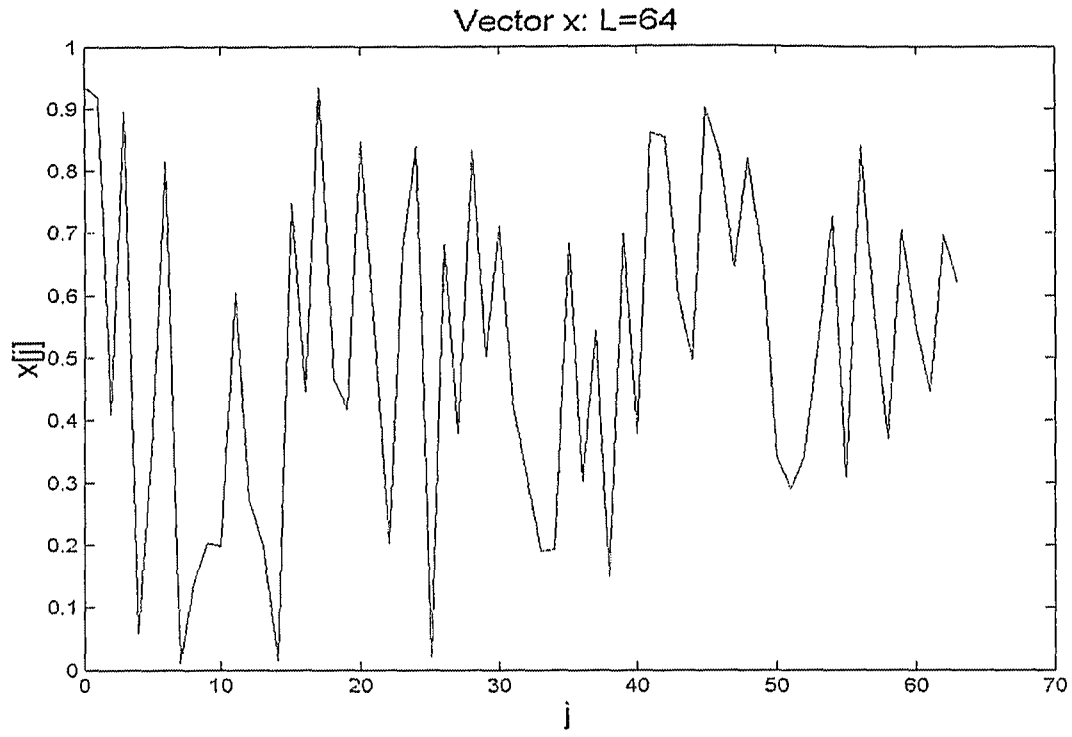

Figure 10

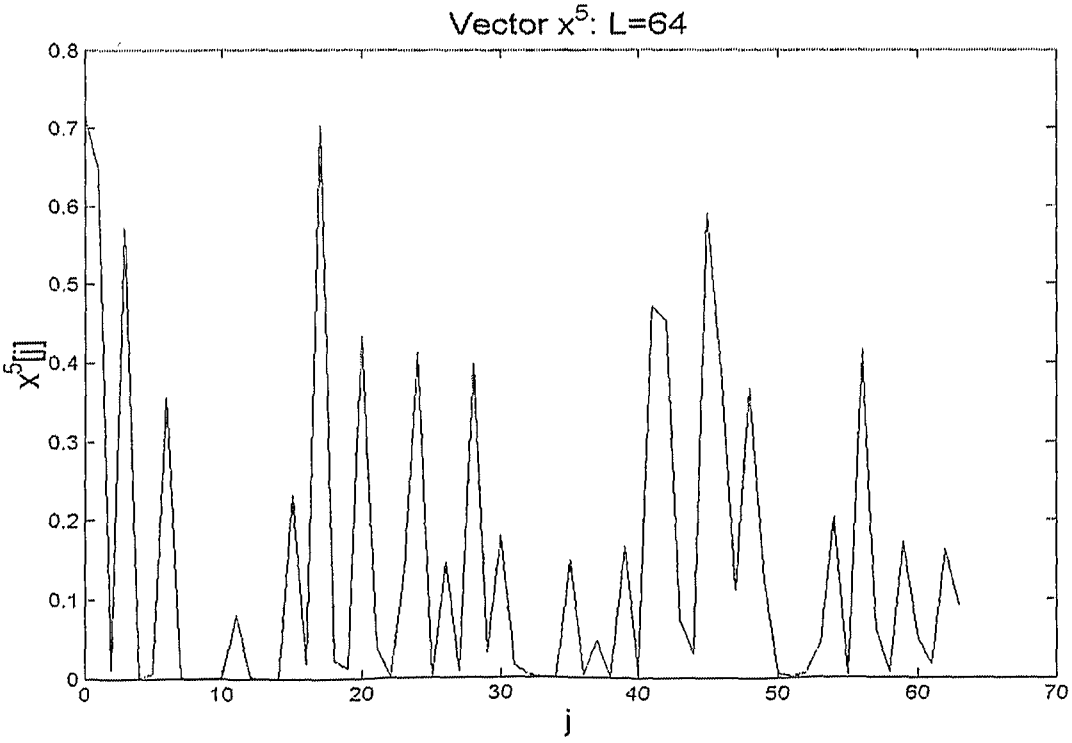

1100

Figure 11

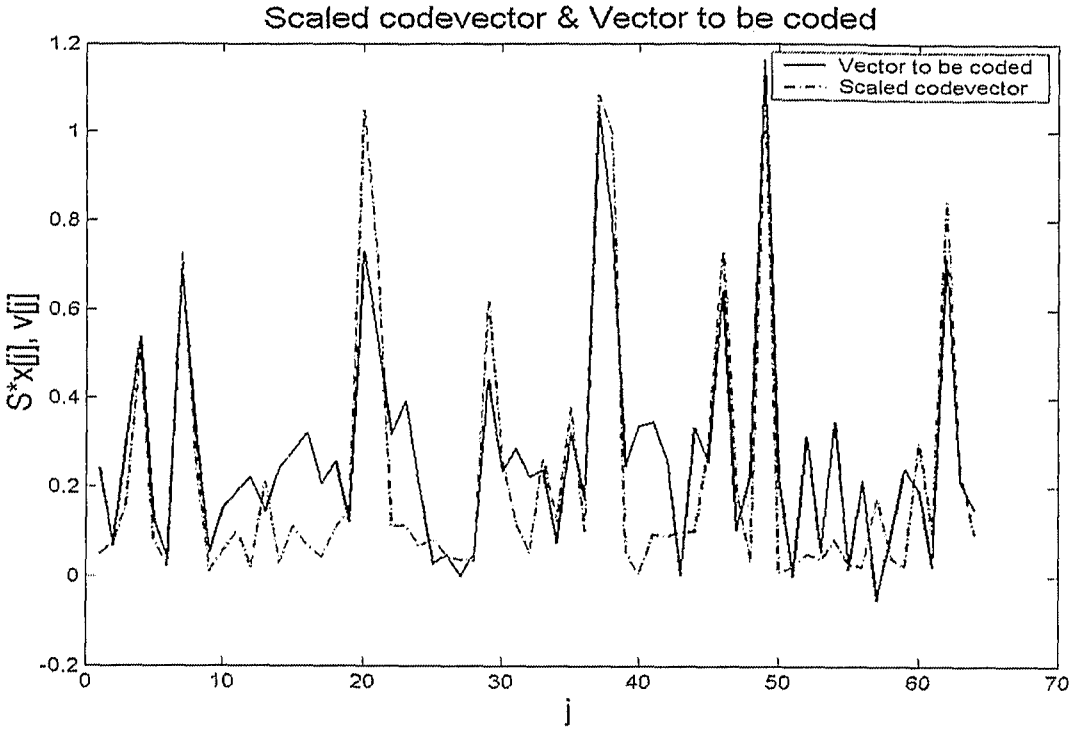

Figure 12

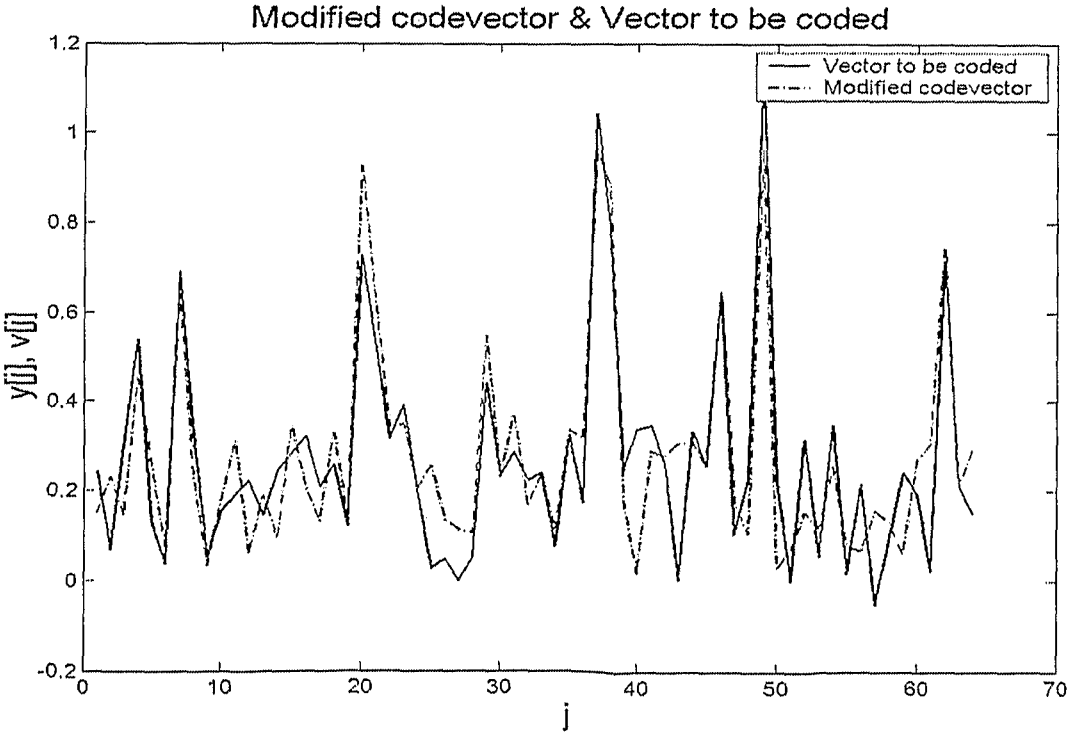

Figure 13

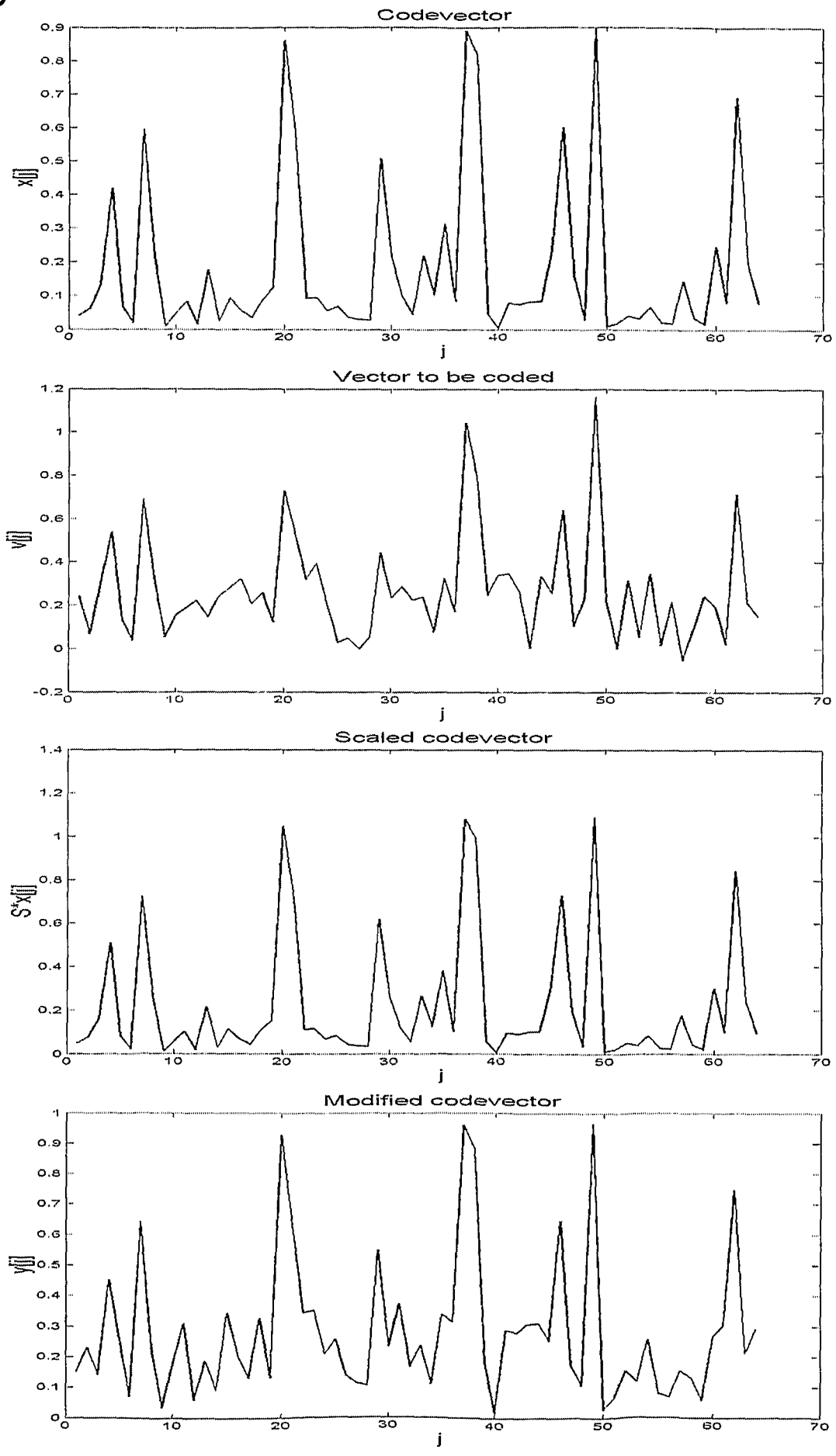
Codevector
x[j]
j
Vector to be coded
v[j]
j
Scaled codevector
S*x[j]
j
Modified codevector
y[j]
j

Figure 14

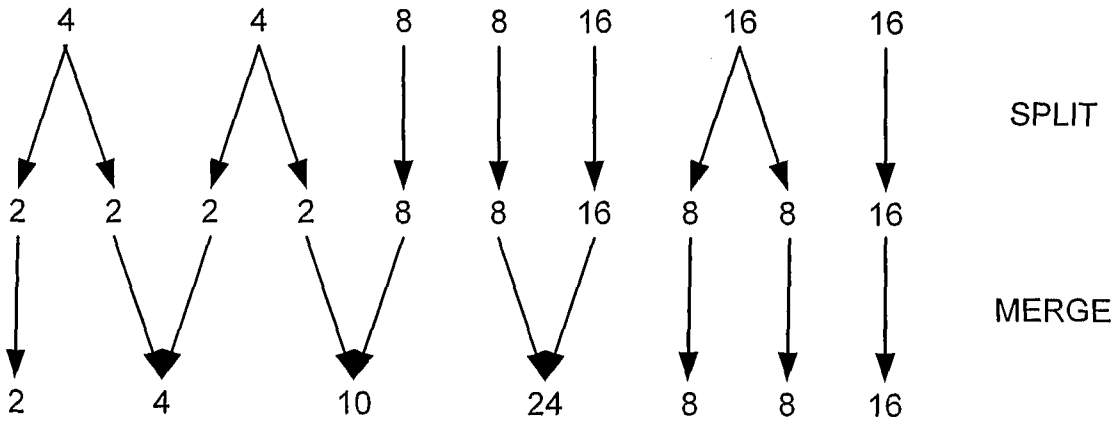

Figure 15

