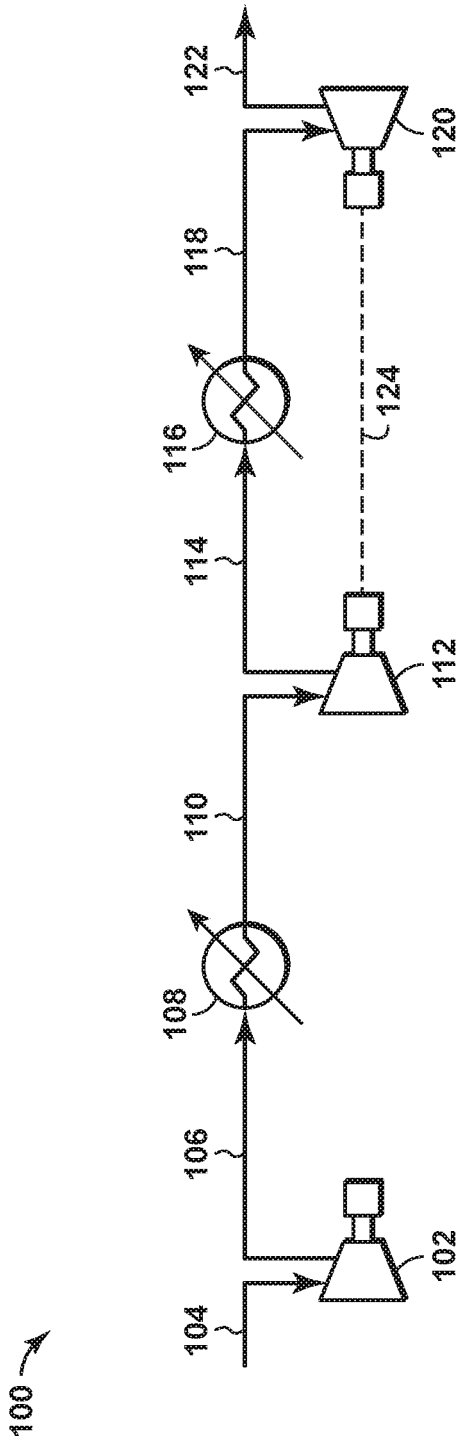

FIG. 1

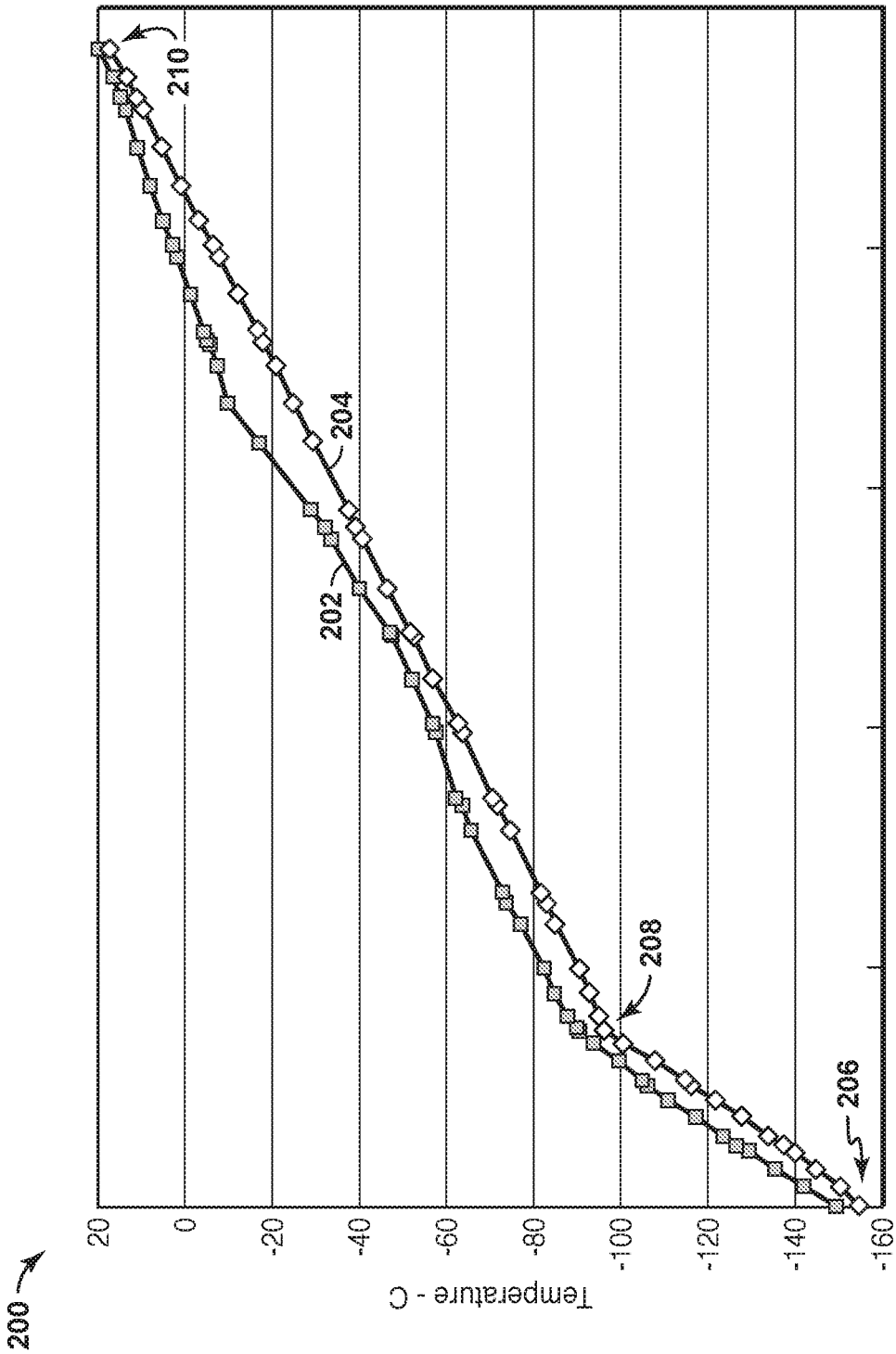
200
210
204
202
208
206
20
0
-20
-40
-60
-80
-100
-120
-140
-160
Temperature - C
Heat exchanged

FIG. 2

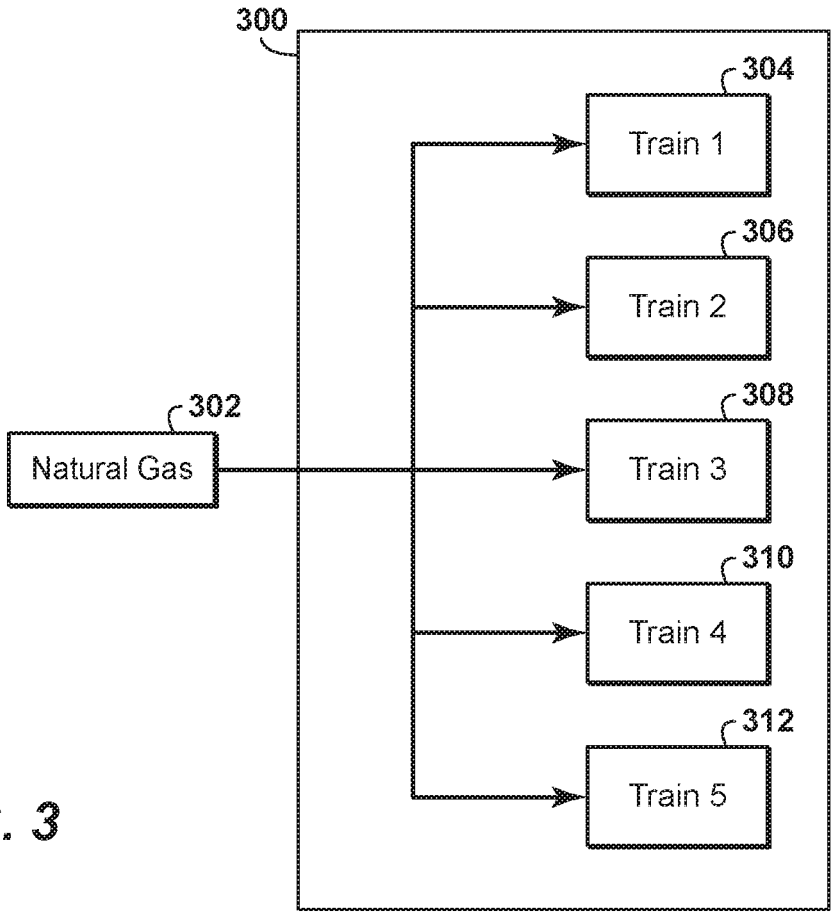
300
304
Train 1
306
Train 2
302
Natural Gas
308
Train 3
310
Train 4
312
Train 5

FIG. 3

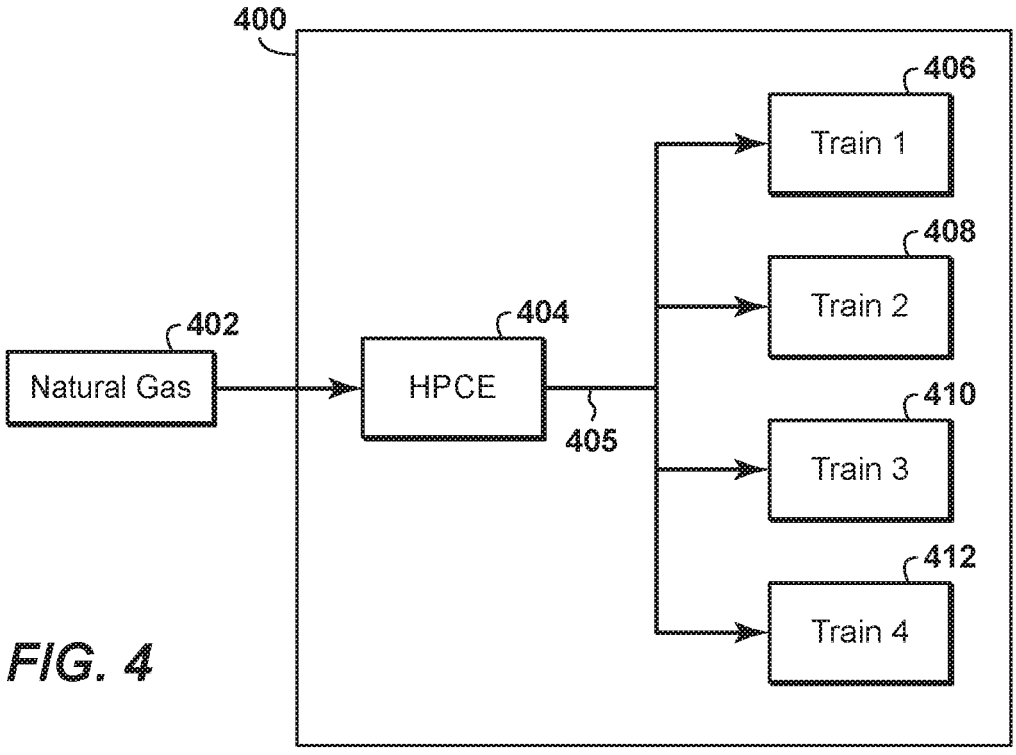
400
406
Train 1
408
Train 2
402
Natural Gas
404
HPCE
405
410
Train 3
412
Train 4

FIG. 4

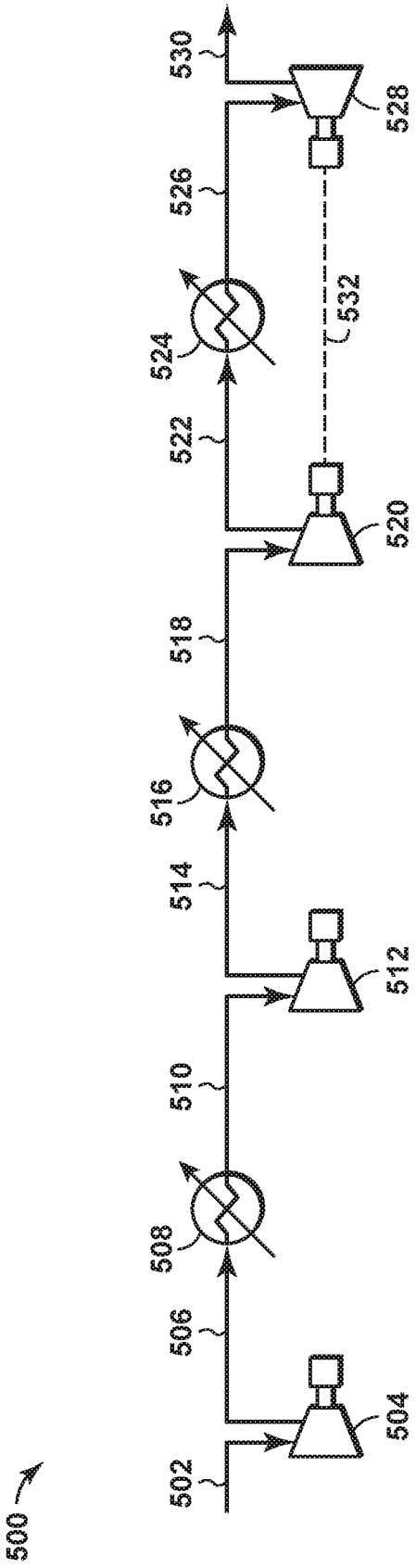
500
502
504
506
508
510
512
514
516
518
520
522
524
526
528
530
532

FIG. 5

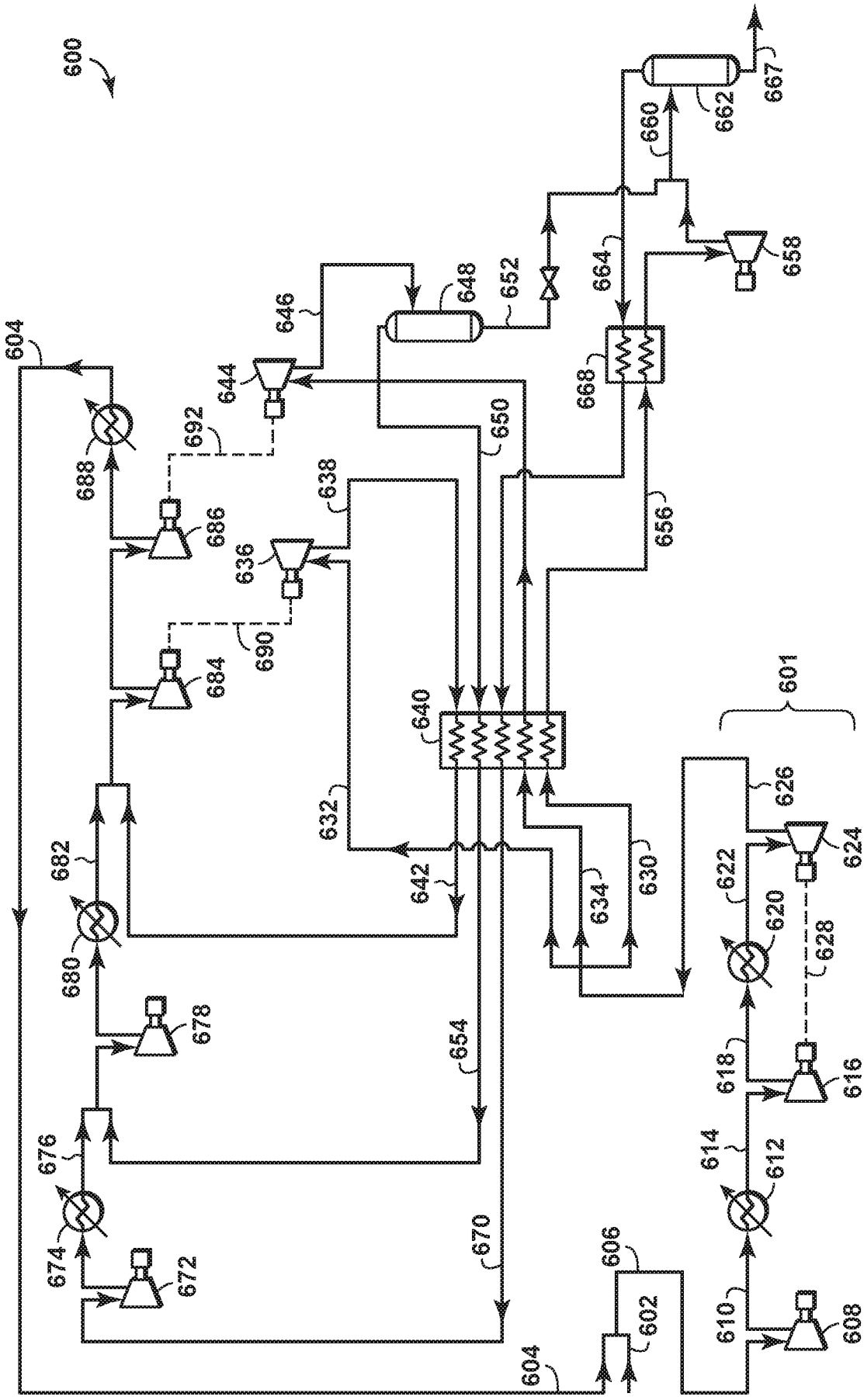
600
601
602
604
606
608
610
612
614
616
618
620
622
624
626
628
630
632
634
636
638
640
642
644
646
648
650
652
654
656
658
660
662
664
667
668
670
672
674
676
678
680
682
684
686
688
690
692

FIG. 6

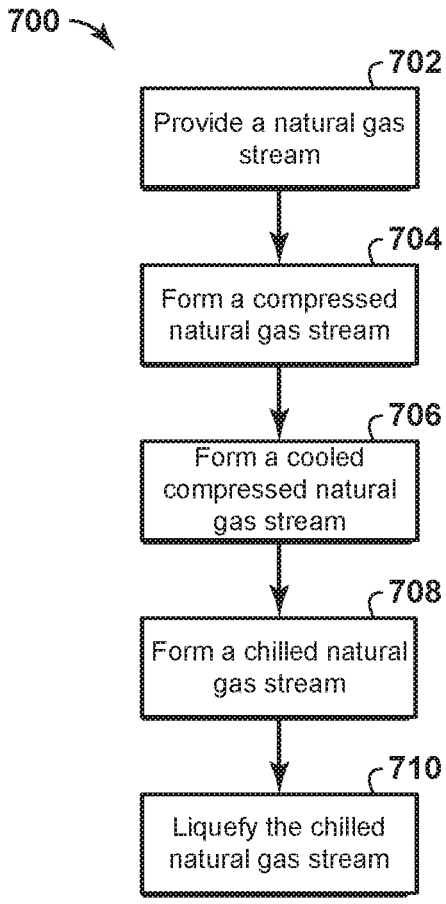
700
702
Provide a natural gas stream
704
Form a compressed natural gas stream
706
Form a cooled compressed natural gas stream
708
Form a chilled natural gas stream
710
Liquefy the chilled natural gas stream

FIG. 7