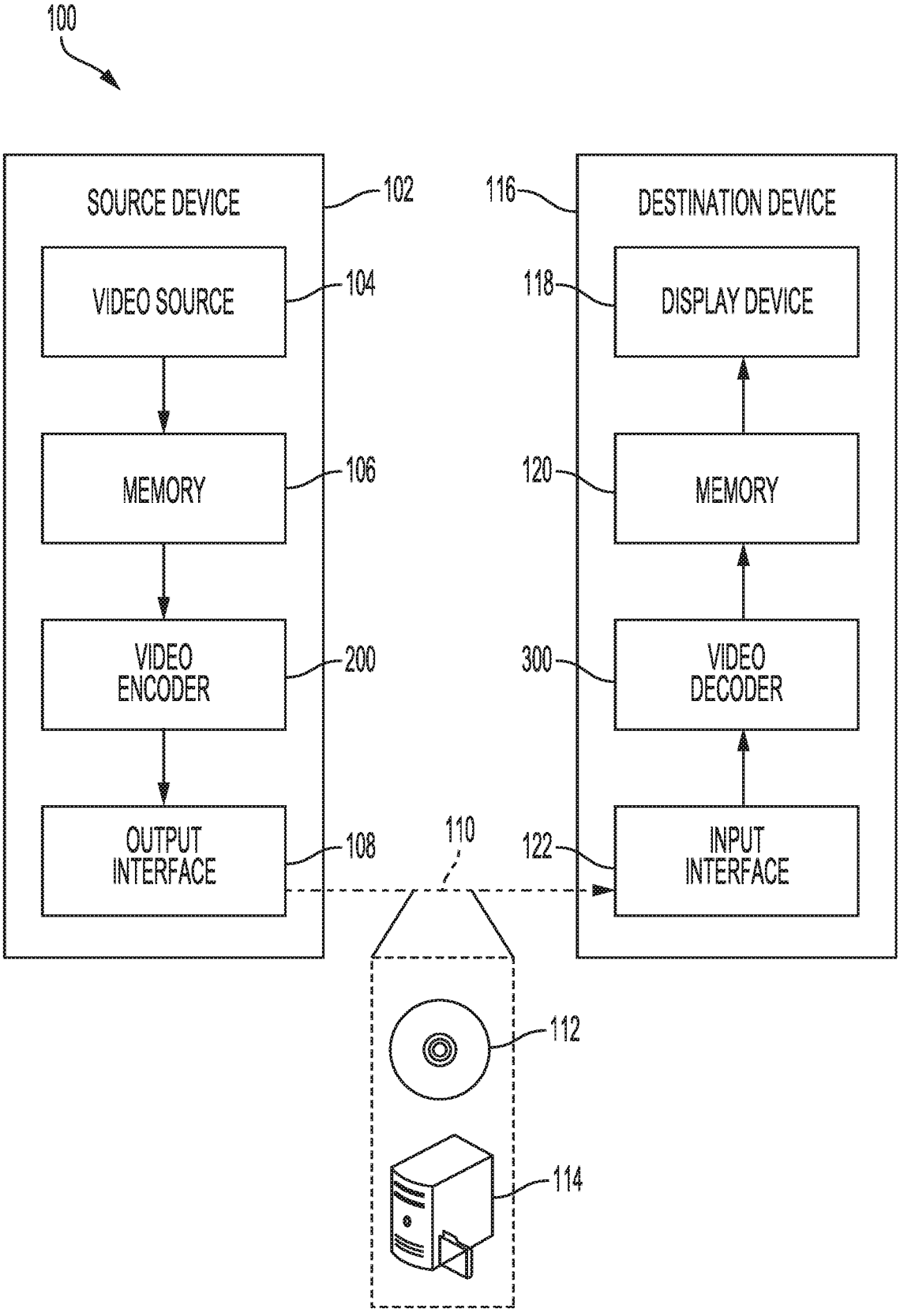
100
SOURCE DEVICE
102
VIDEO SOURCE
104
MEMORY
106
VIDEO ENCODER
200
OUTPUT INTERFACE
108
110
DESTINATION DEVICE
116
DISPLAY DEVICE
118
MEMORY
120
VIDEO DECODER
300
INPUT INTERFACE
122
112
114

FIG. 1

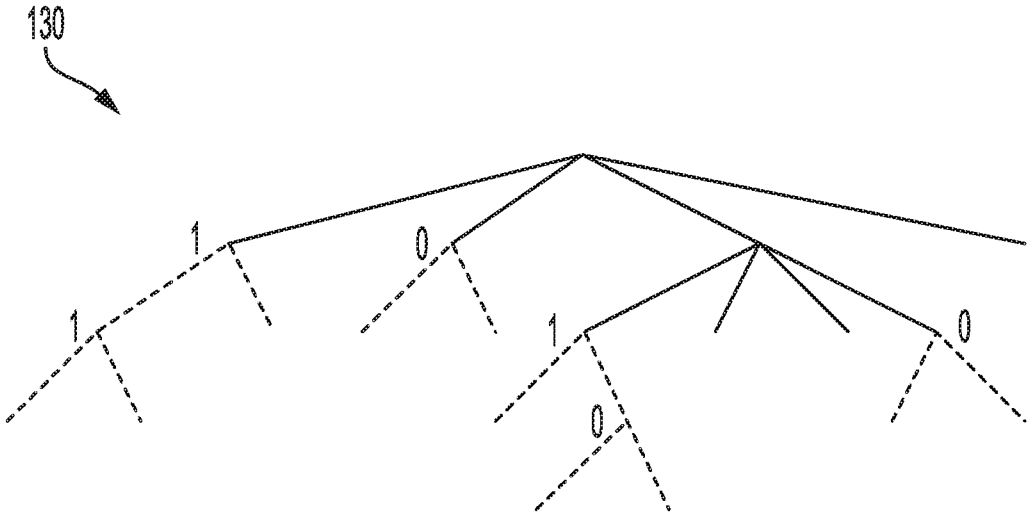

FIG. 2A

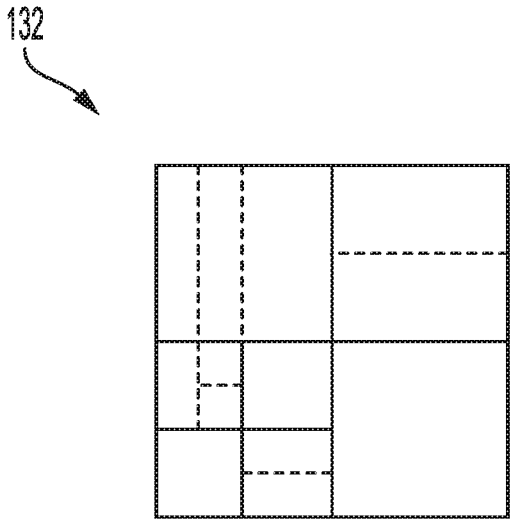

FIG. 2B

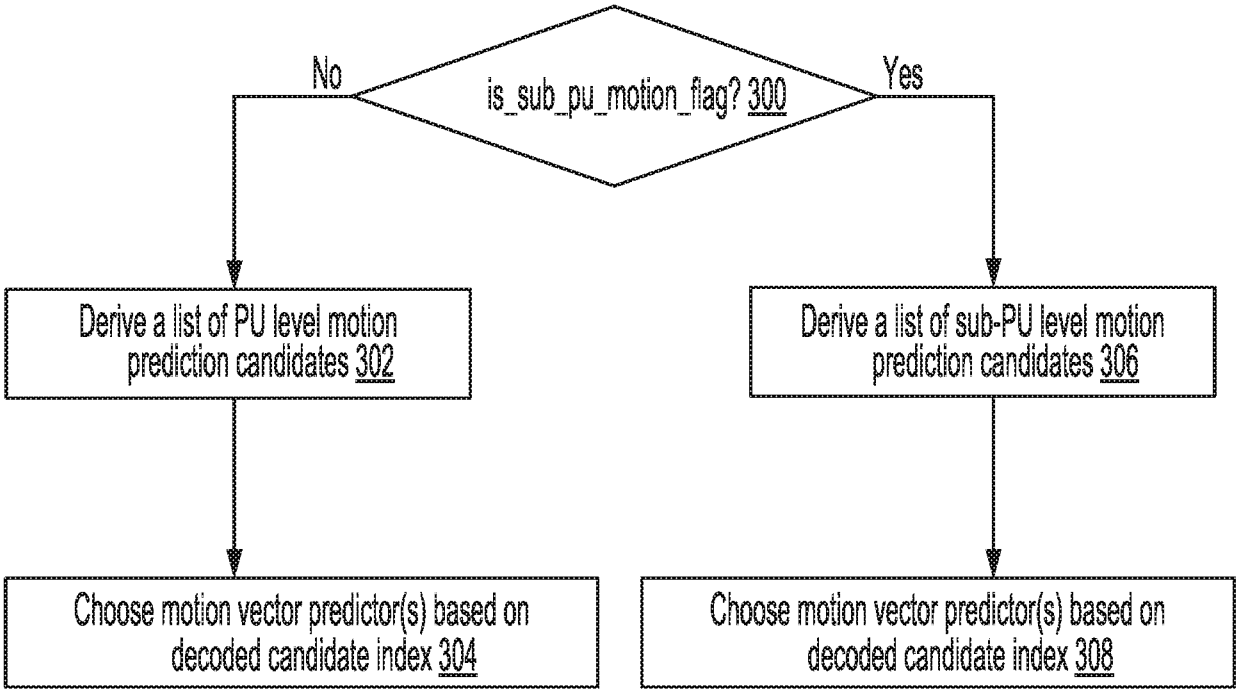
is_sub_pu_motion_flag? 300
No
Yes
Derive a list of PU level motion prediction candidates 302
Derive a list of sub-PU level motion prediction candidates 306
Choose motion vector predictor(s) based on decoded candidate index 304
Choose motion vector predictor(s) based on decoded candidate index 308

FIG. 3

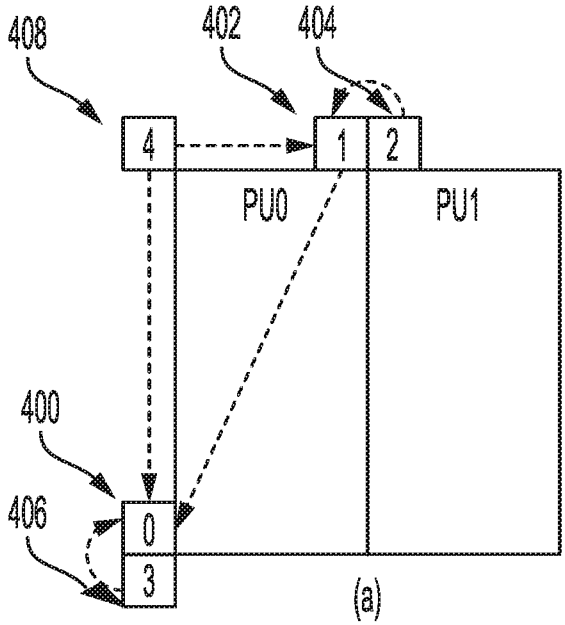
408
402
404
4
1
2
PU0
PU1
400
406
0
3
(a)

FIG. 4

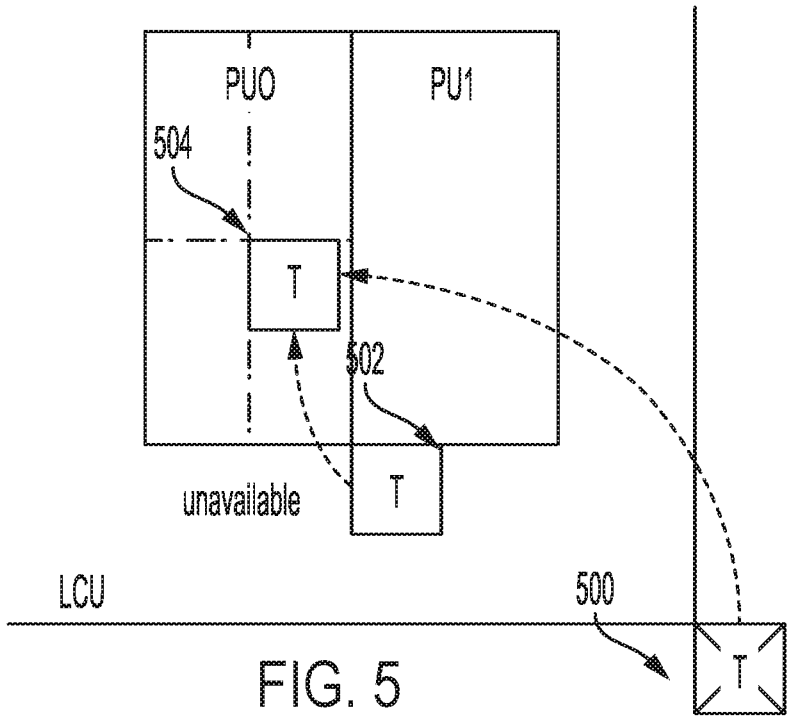
PUO
PU1
504
T
502
unavailable
T
LCU
500
T

FIG. 5

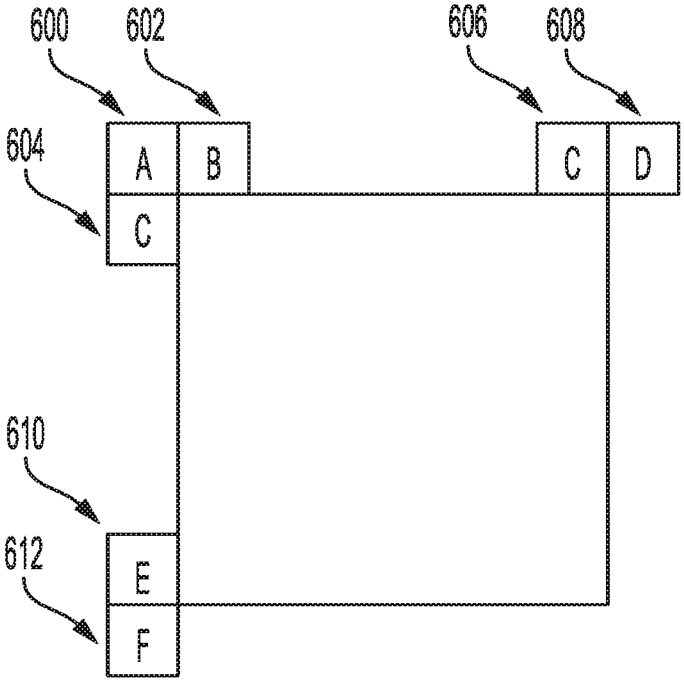

FIG. 6

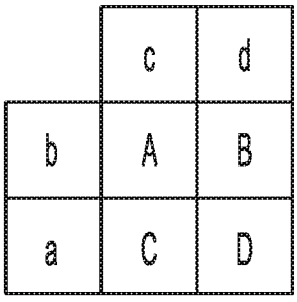

FIG. 7

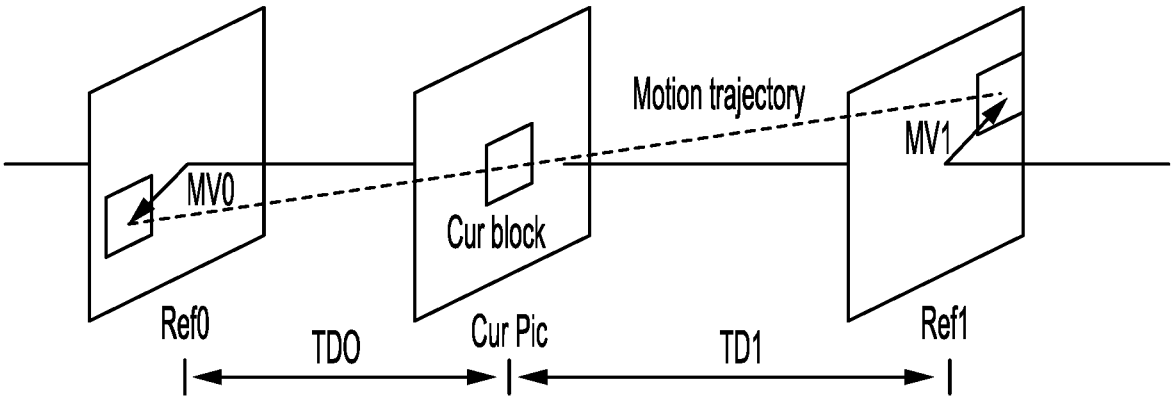
Motion trajectory
MV1
MV0
Cur block
Ref0
TDO
Cur Pic
TD1
Ref1

FIG. 8

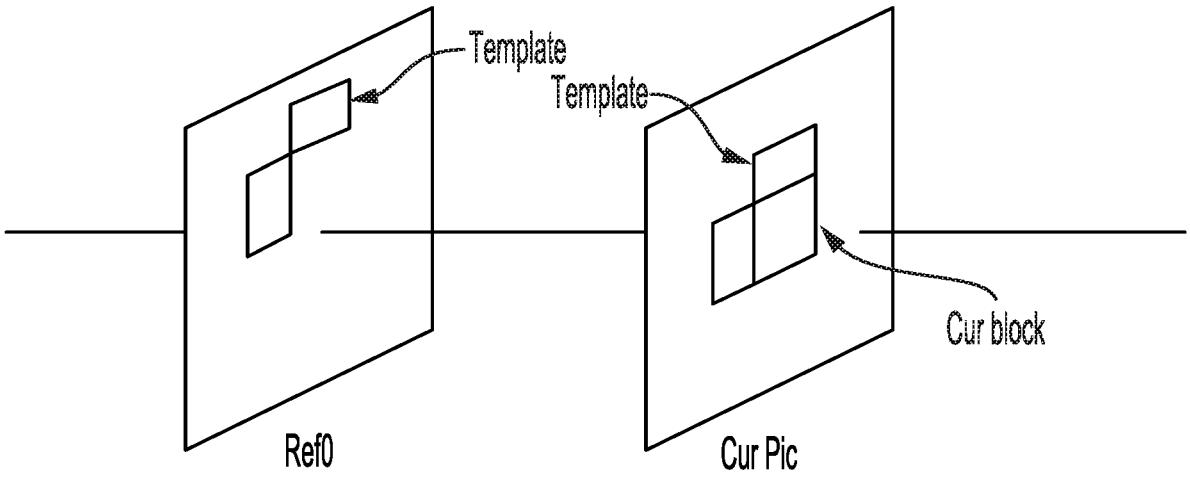
Template
Template
Cur block
Ref0
Cur Pic

FIG. 9

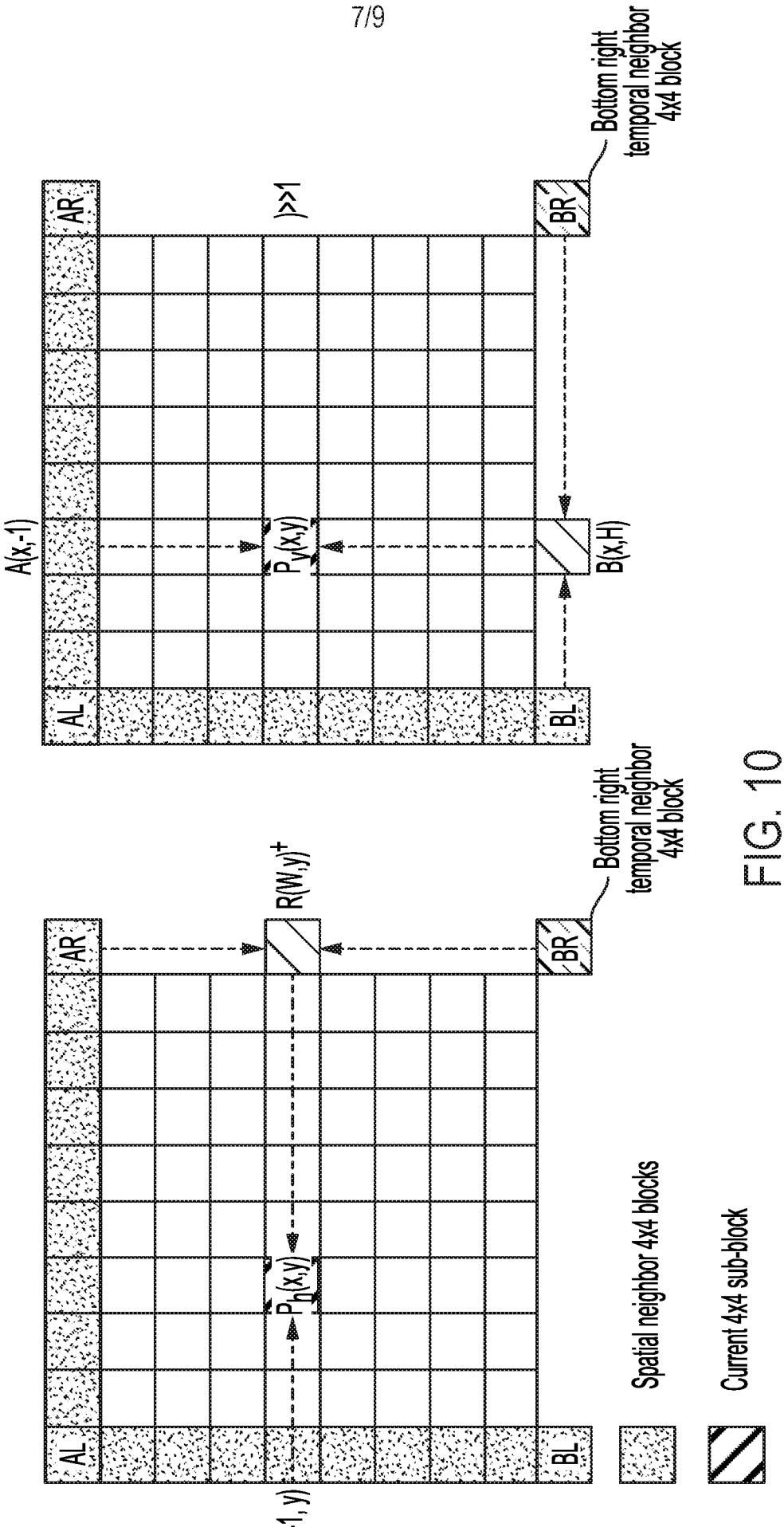
AL
AR
BL
BR
A(x,-1)
L(-1, y)
$P_v(x,y)$
$P_h(x,y)$
B(x,H)
R(W,y)
)>>1
Bottom right temporal neighbor 4x4 block
Bottom right temporal neighbor 4x4 block
Spatial neighbor 4x4 blocks
Current 4x4 sub-block

FIG. 10

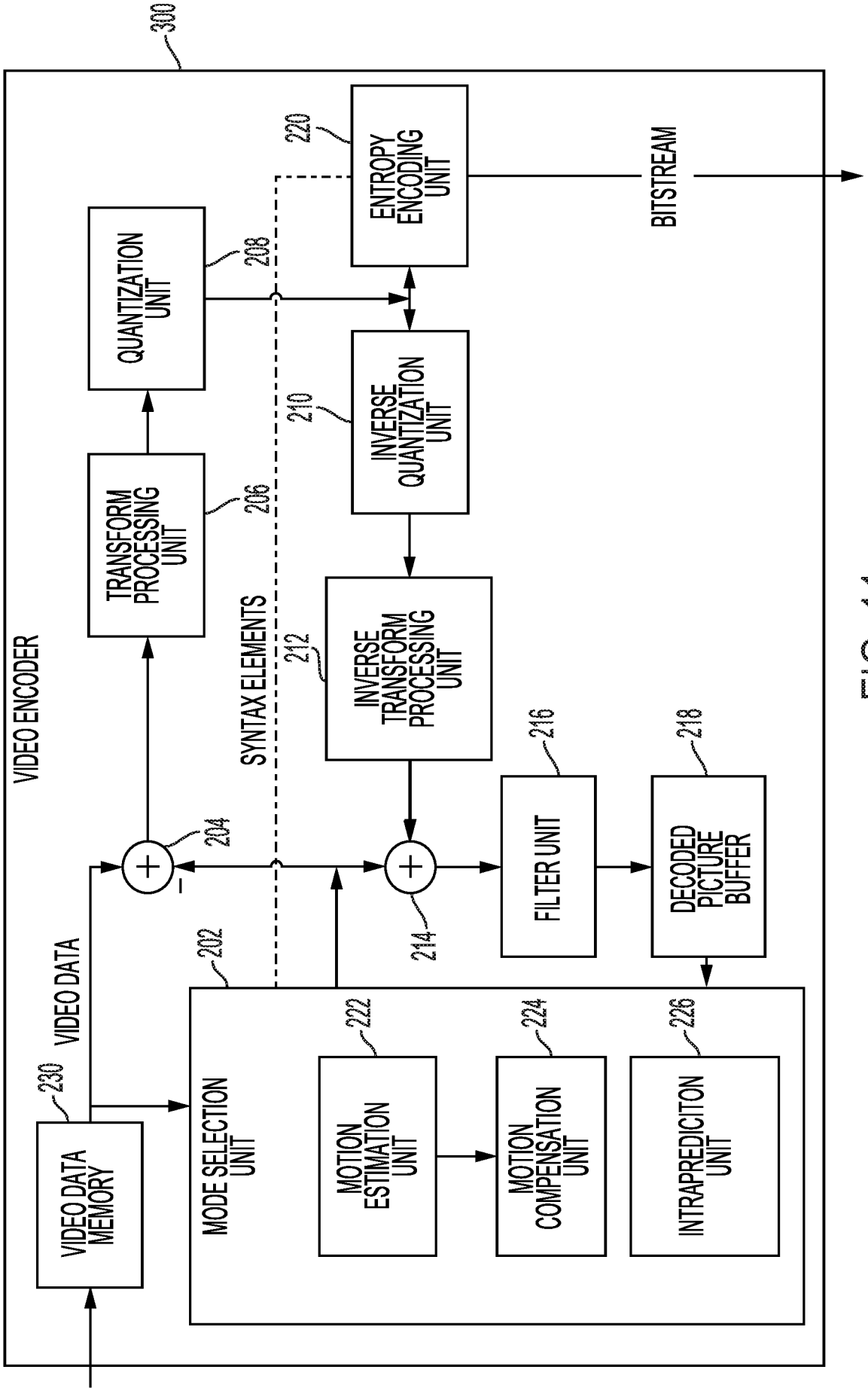
300
VIDEO ENCODER
VIDEO DATA MEMORY
230
VIDEO DATA
MODE SELECTION UNIT
202
MOTION ESTIMATION UNIT
222
MOTION COMPENSATION UNIT
224
INTRAPREDICTON UNIT
226
204
TRANSFORM PROCESSING UNIT
206
QUANTIZATION UNIT
208
SYNTAX ELEMENTS
INVERSE QUANTIZATION UNIT
210
INVERSE TRANSFORM PROCESSING UNIT
212
214
FILTER UNIT
216
DECODED PICTURE BUFFER
218
ENTROPY ENCODING UNIT
220
BITSTREAM

FIG. 11

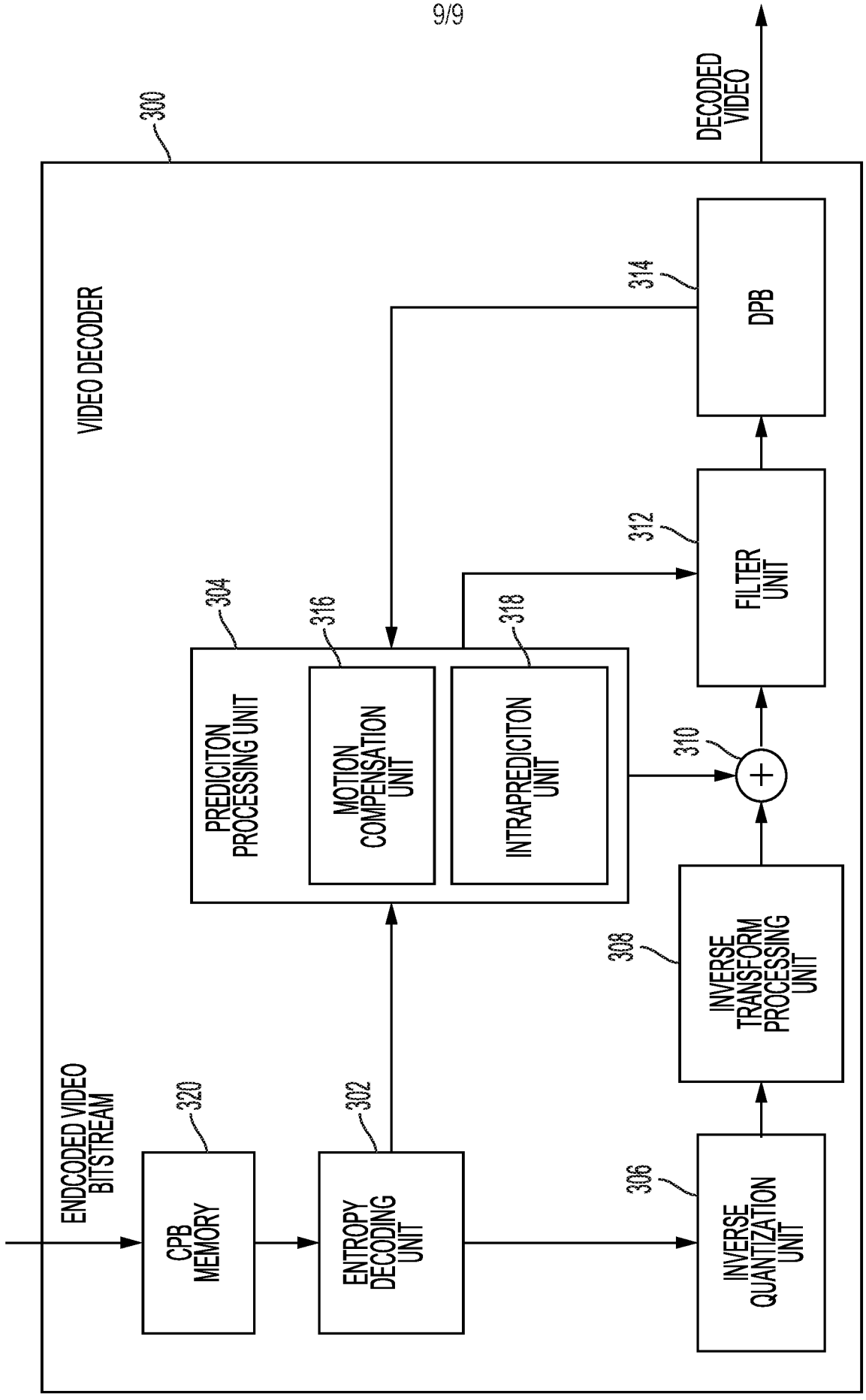
300
DECODED VIDEO
VIDEO DECODER
314
DPB
312
FILTER UNIT
304
316
318
PREDICITON PROCESSING UNIT
MOTION COMPENSATION UNIT
INTRAPREDICITON UNIT
310
308
INVERSE TRANSFORM PROCESSING UNIT
ENDCODED VIDEO BITSTREAM
320
CPB MEMORY
302
ENTROPY DECODING UNIT
306
INVERSE QUANTIZATION UNIT

FIG. 12