FIG. 1

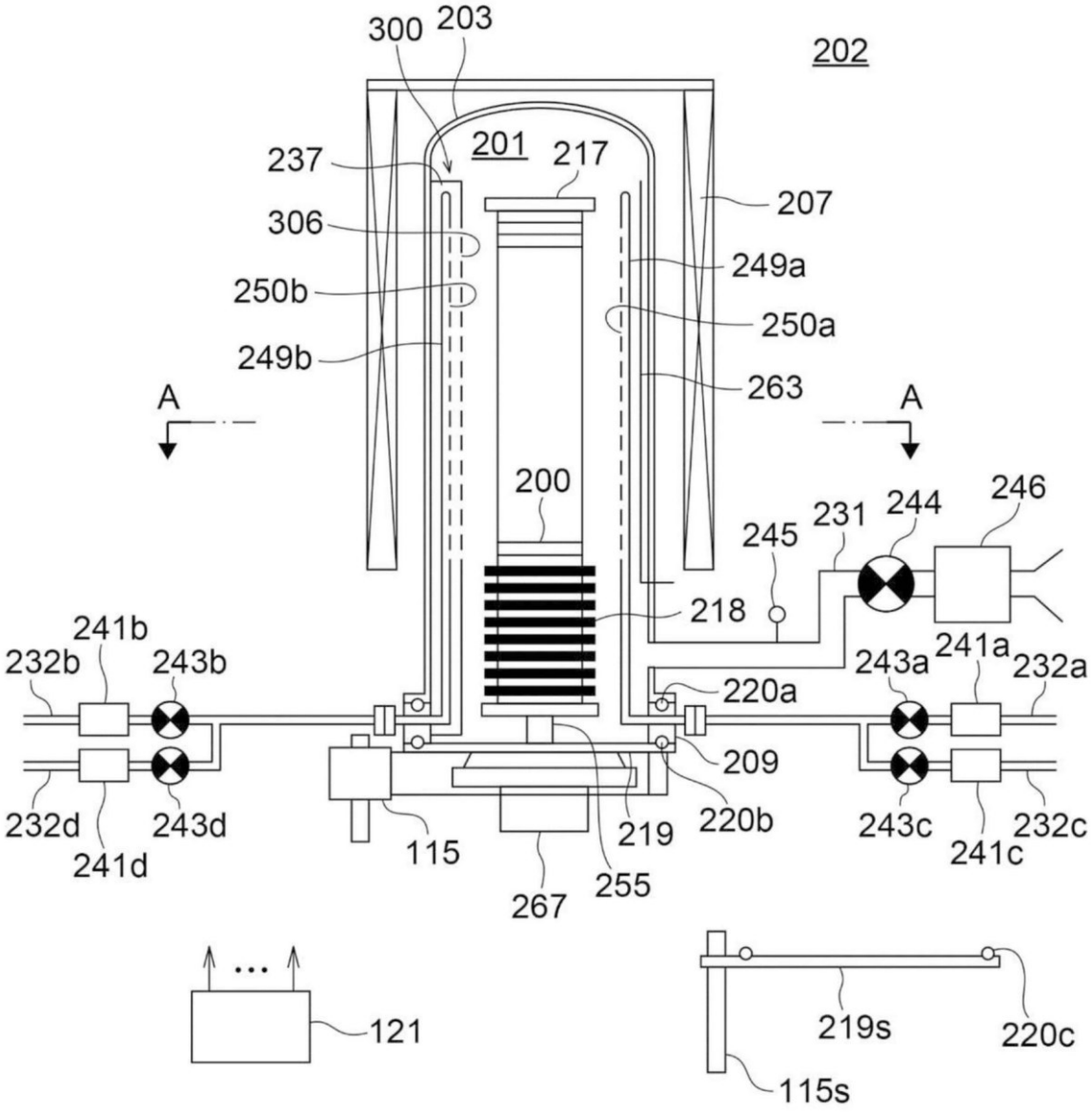
300
203
202
201
217
237
207
306
249a
250b
250a
249b
263
A
A
200
246
244
231
245
218
241b
232b
243b
241a
243a
232a
220a
209
232d
243d
241d
115
219
220b
243c
241c
232c
267
255
121
219s
220c
115s

FIG. 2

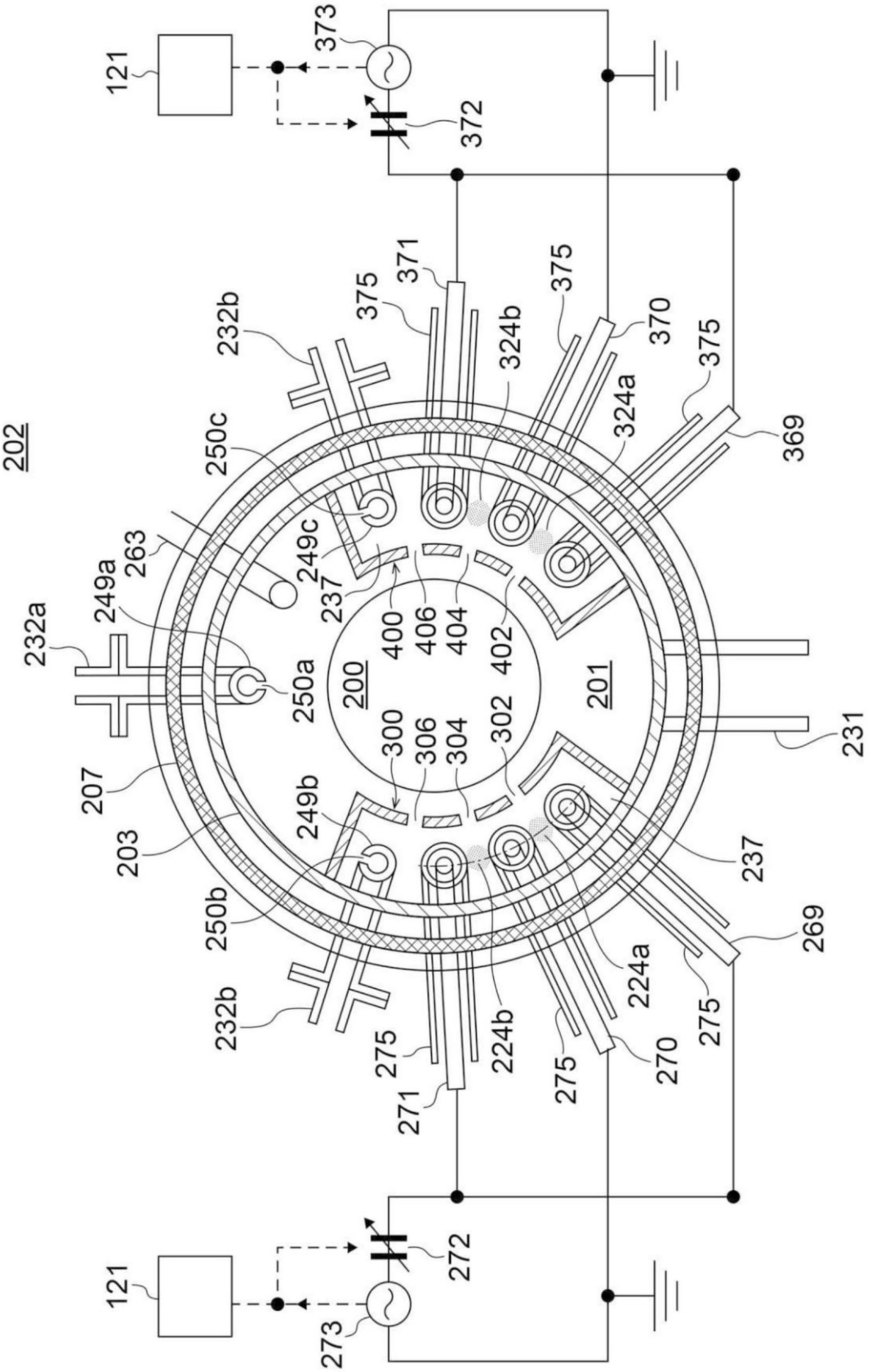
202
121
373
372
371
375
375
370
375
369
232b
324b
324a
250c
249c
263
249a
232a
237
400
406
404
402
200
201
250a
300
306
304
302
231
207
249b
203
237
250b
269
224a
275
232b
275
224b
275
270
271
121
272
273

FIG. 3

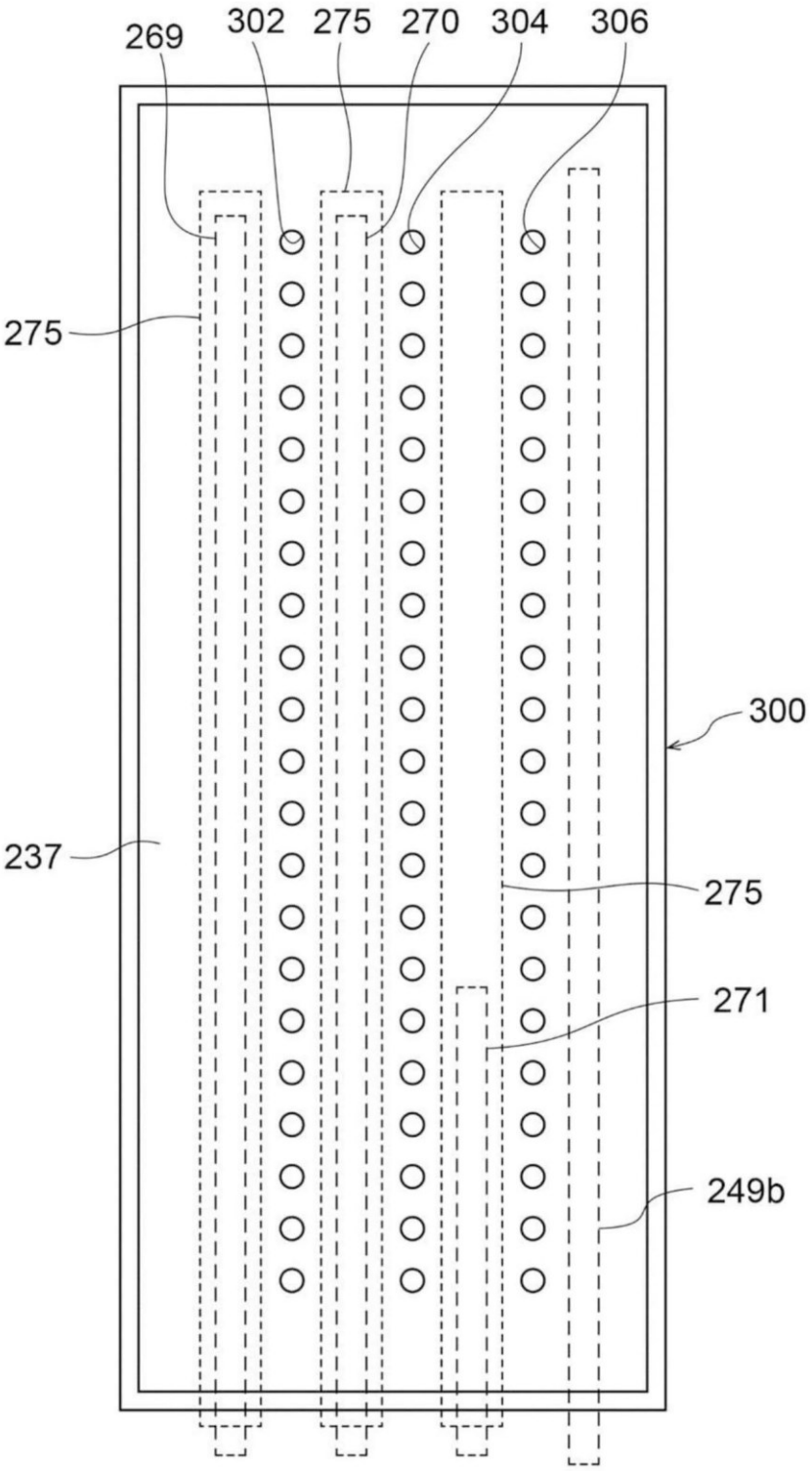

FIG. 4

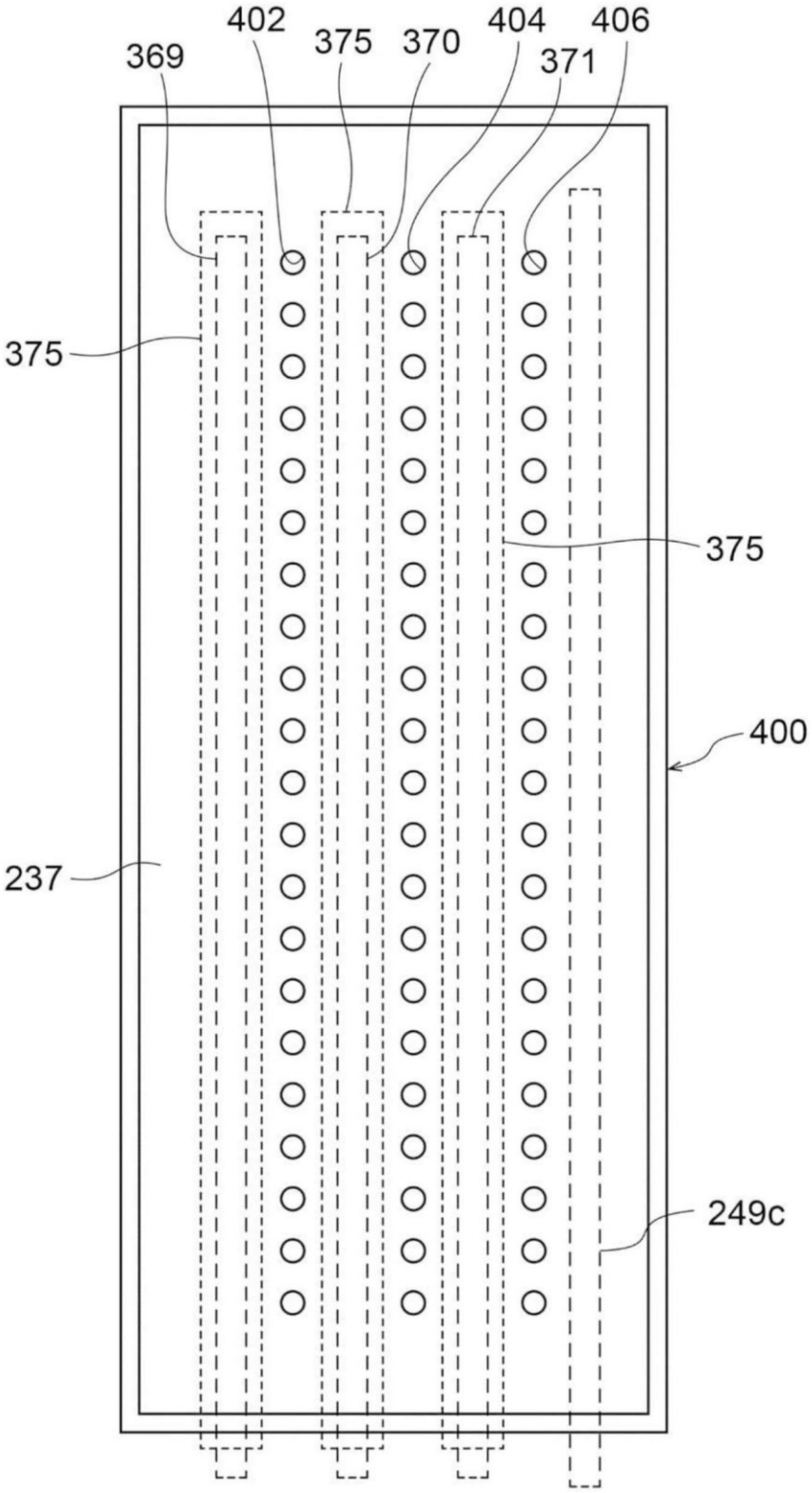

FIG. 5

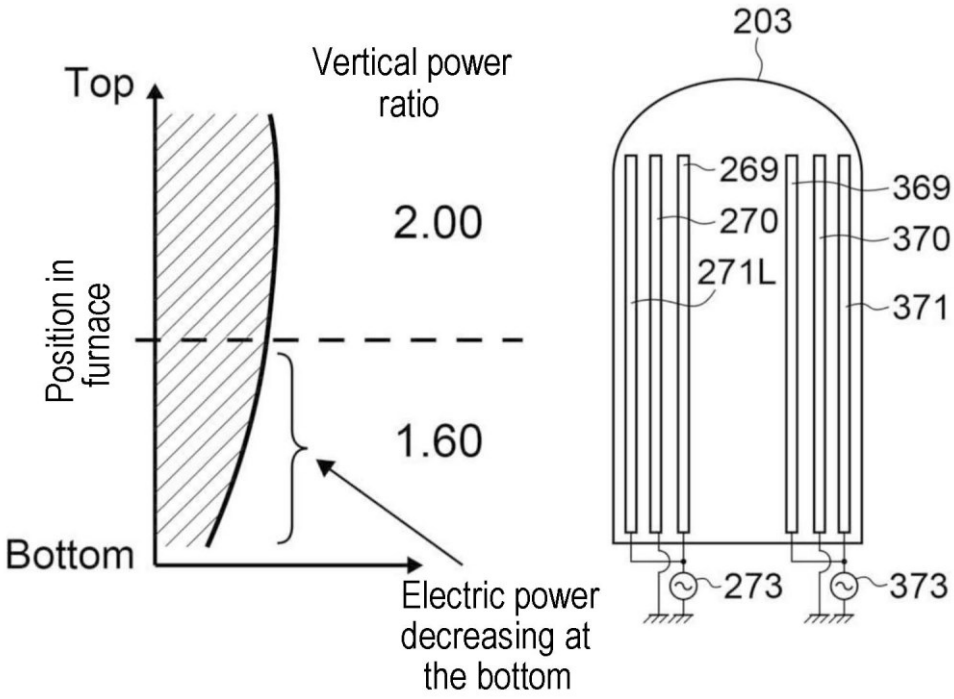
Top
Vertical power ratio
2.00
Position in furnace
1.60
Bottom
Electric power decreasing at the bottom
203
269
270
271L
369
370
371
273
373

FIG. 6

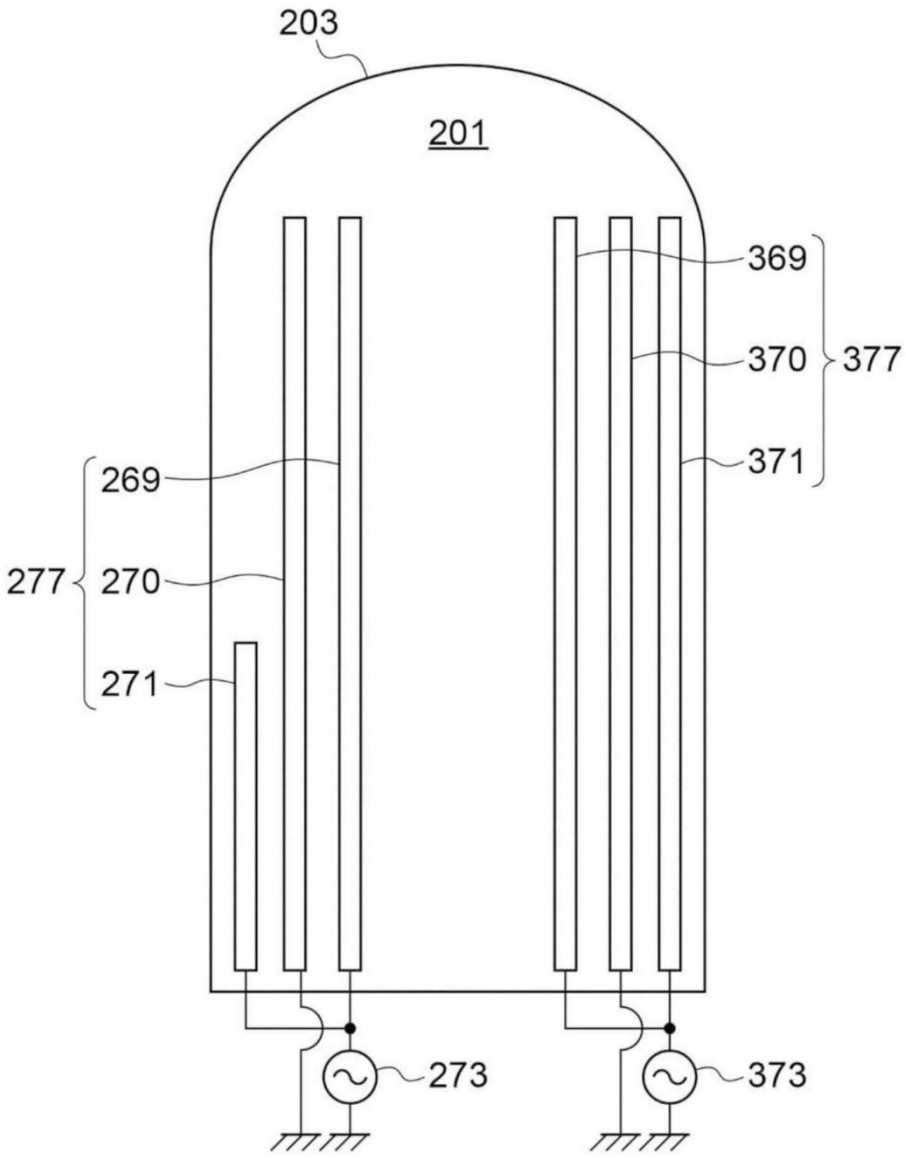

FIG. 7

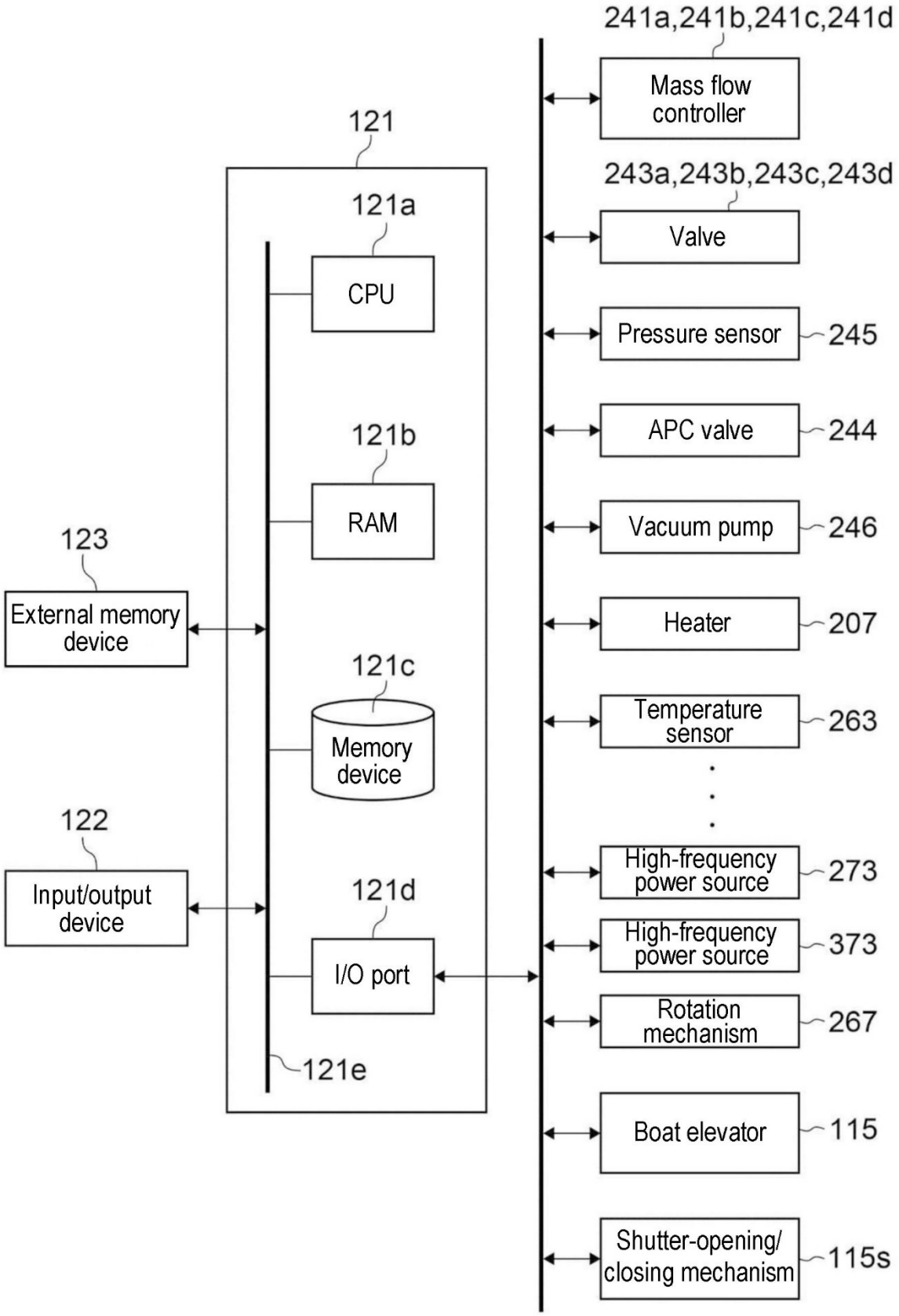
241a,241b,241c,241d
Mass flow controller
121
121a
CPU
243a,243b,243c,243d
Valve
Pressure sensor
245
APC valve
244
121b
RAM
Vacuum pump
246
123
External memory device
Heater
207
121c
Memory device
Temperature sensor
263
122
Input/output device
High-frequency power source
273
121d
I/O port
High-frequency power source
373
Rotation mechanism
267
121e
Boat elevator
115
Shutter-opening/ closing mechanism
115s

FIG. 8

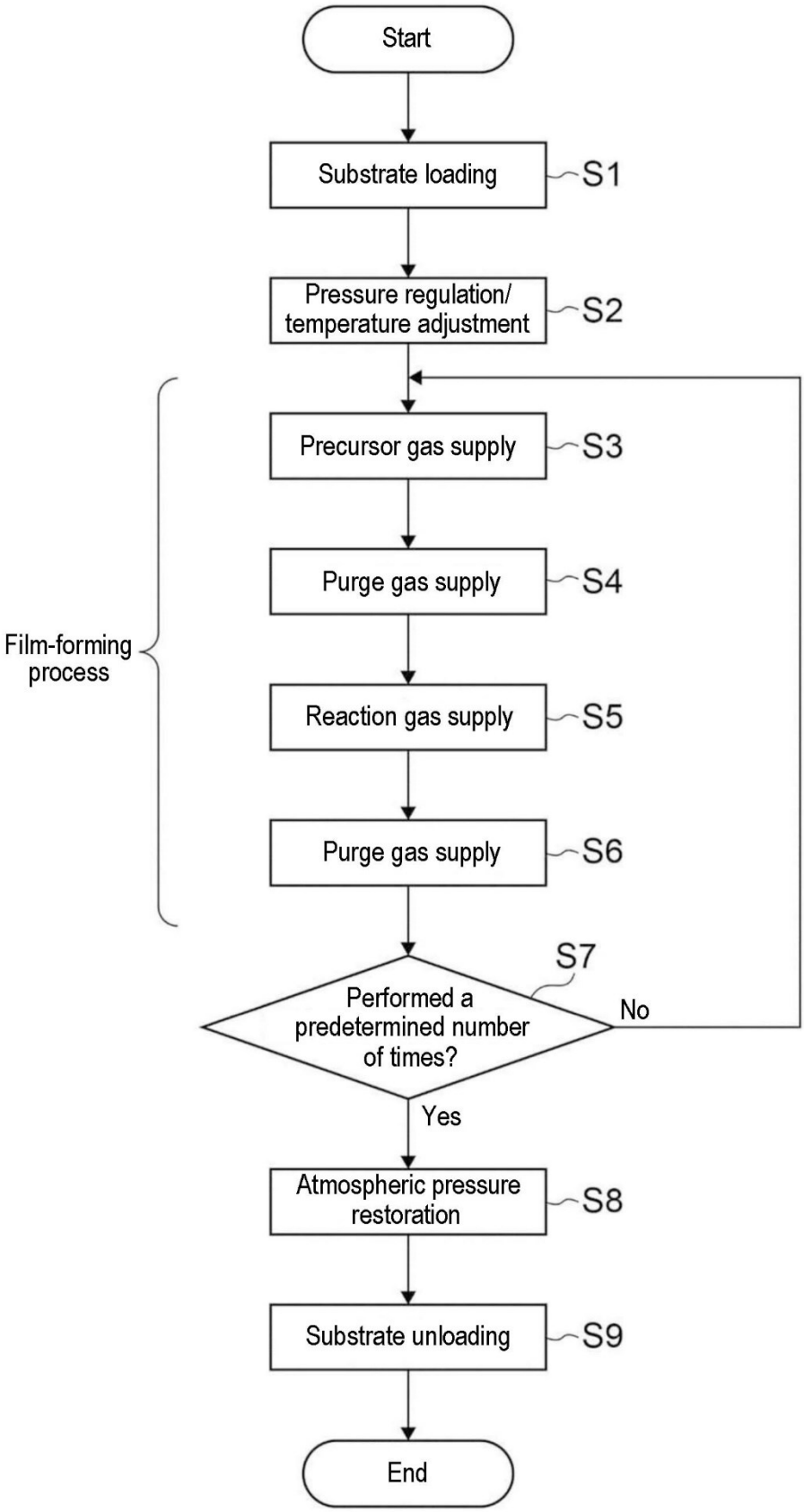
Start
Substrate loading
S1
Pressure regulation/ temperature adjustment
S2
Precursor gas supply
S3
Purge gas supply
S4
Reaction gas supply
S5
Purge gas supply
S6
Film-forming process
S7
Performed a predetermined number of times?
No
Yes
Atmospheric pressure restoration
S8
Substrate unloading
S9
End

FIG. 9

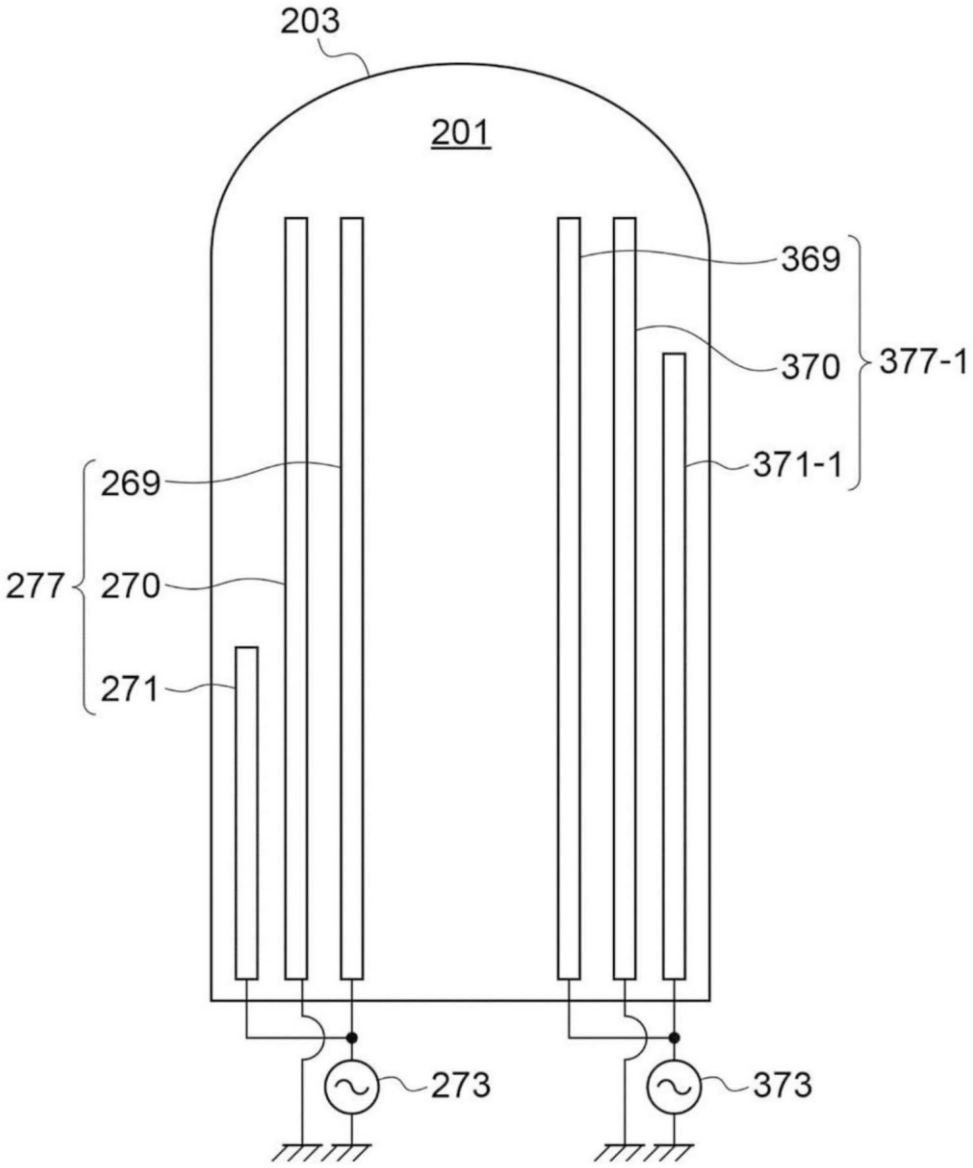

FIG. 10

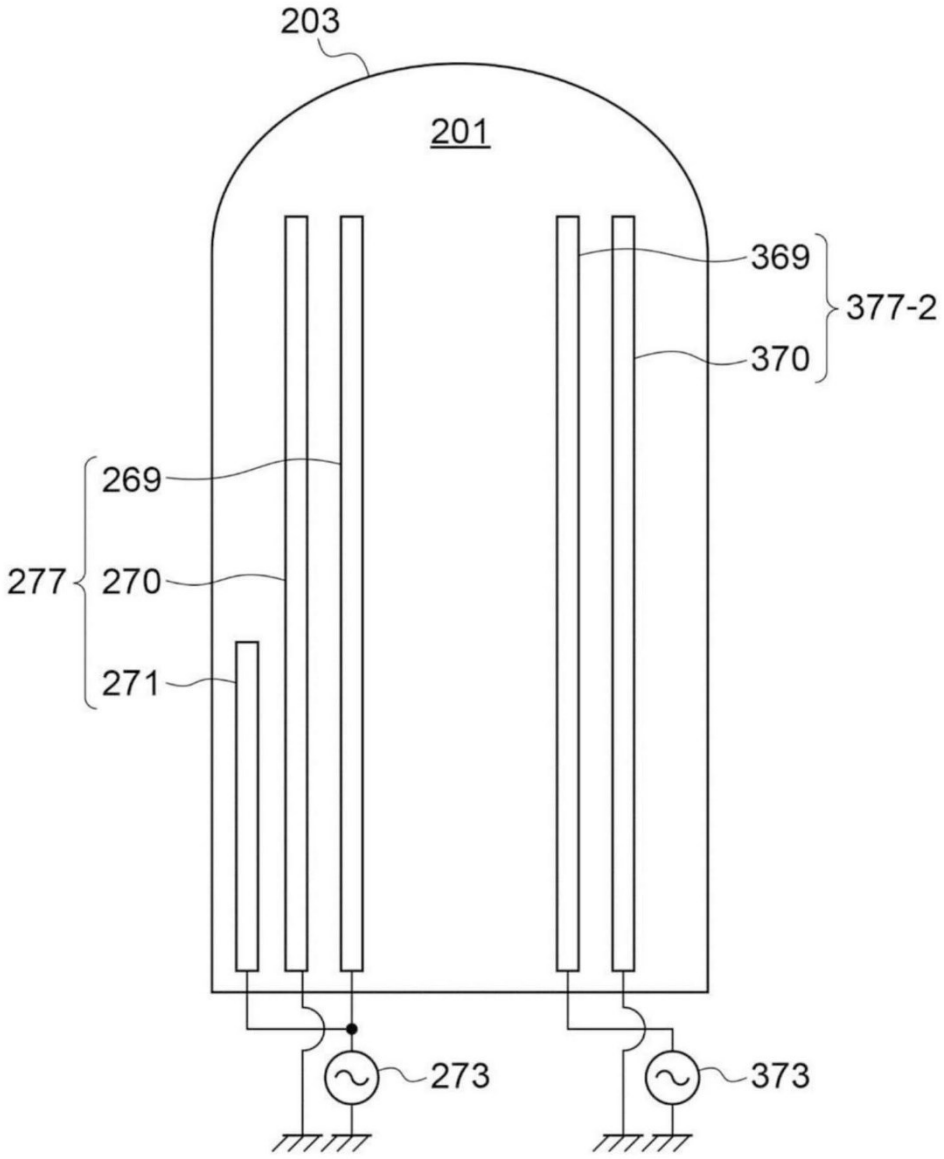

FIG. 11

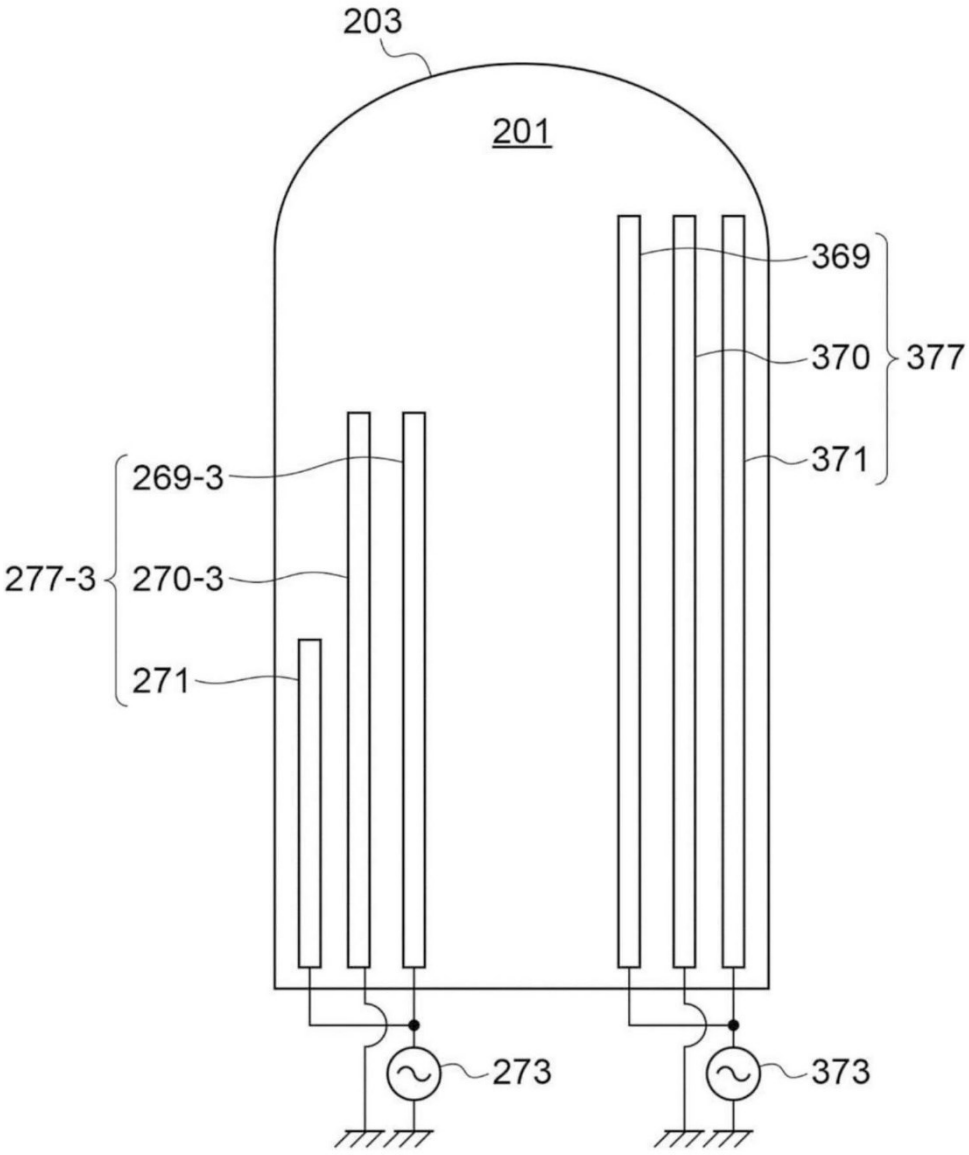

FIG. 12

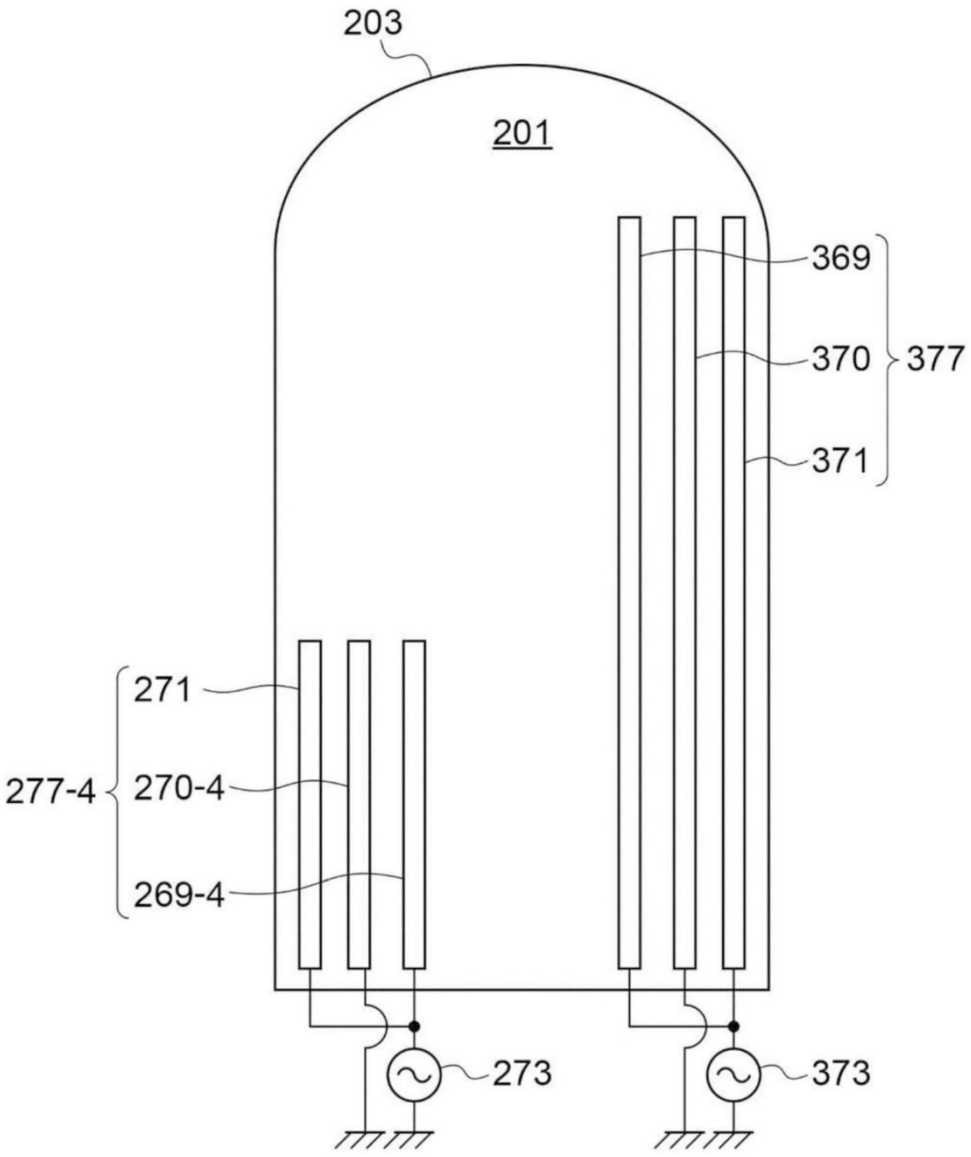

FIG. 13

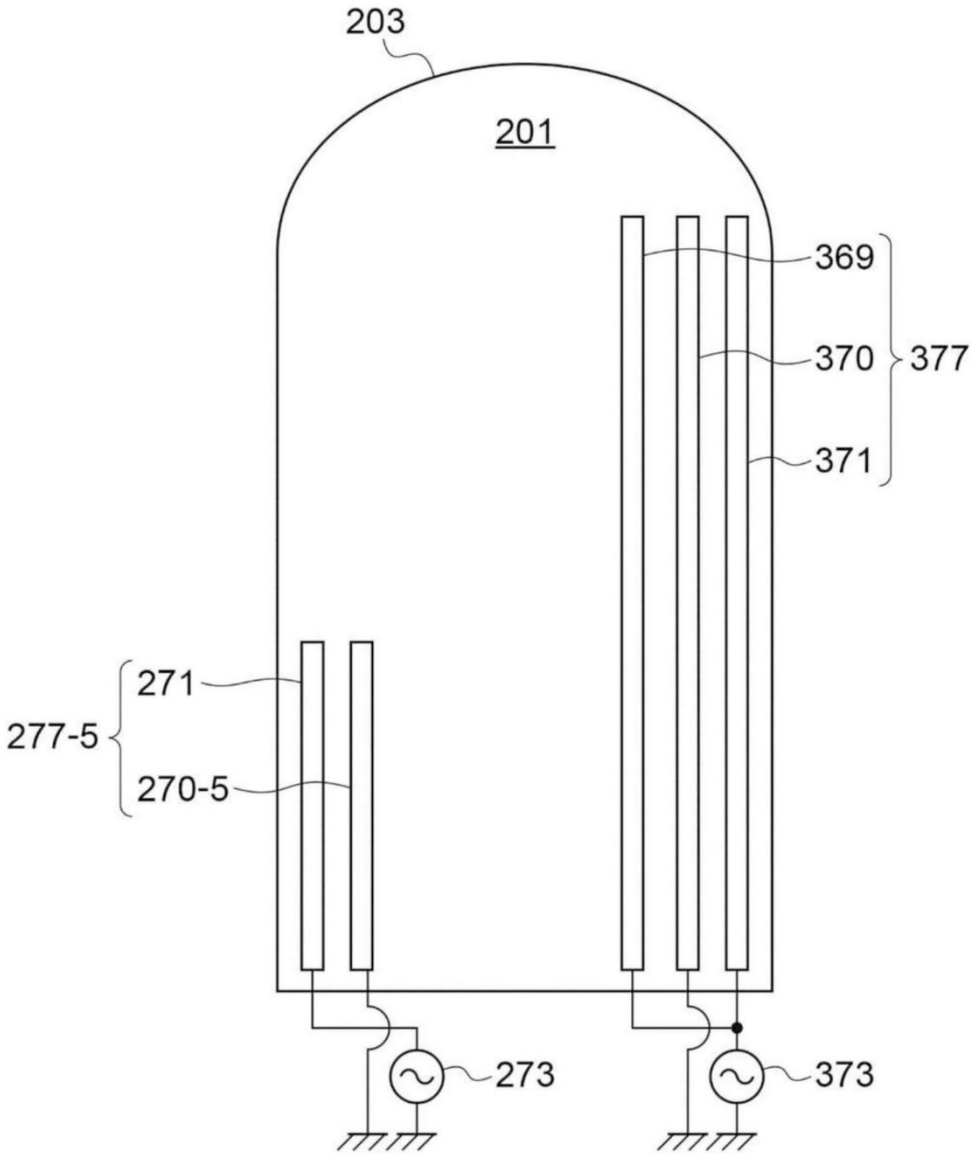

FIG. 14

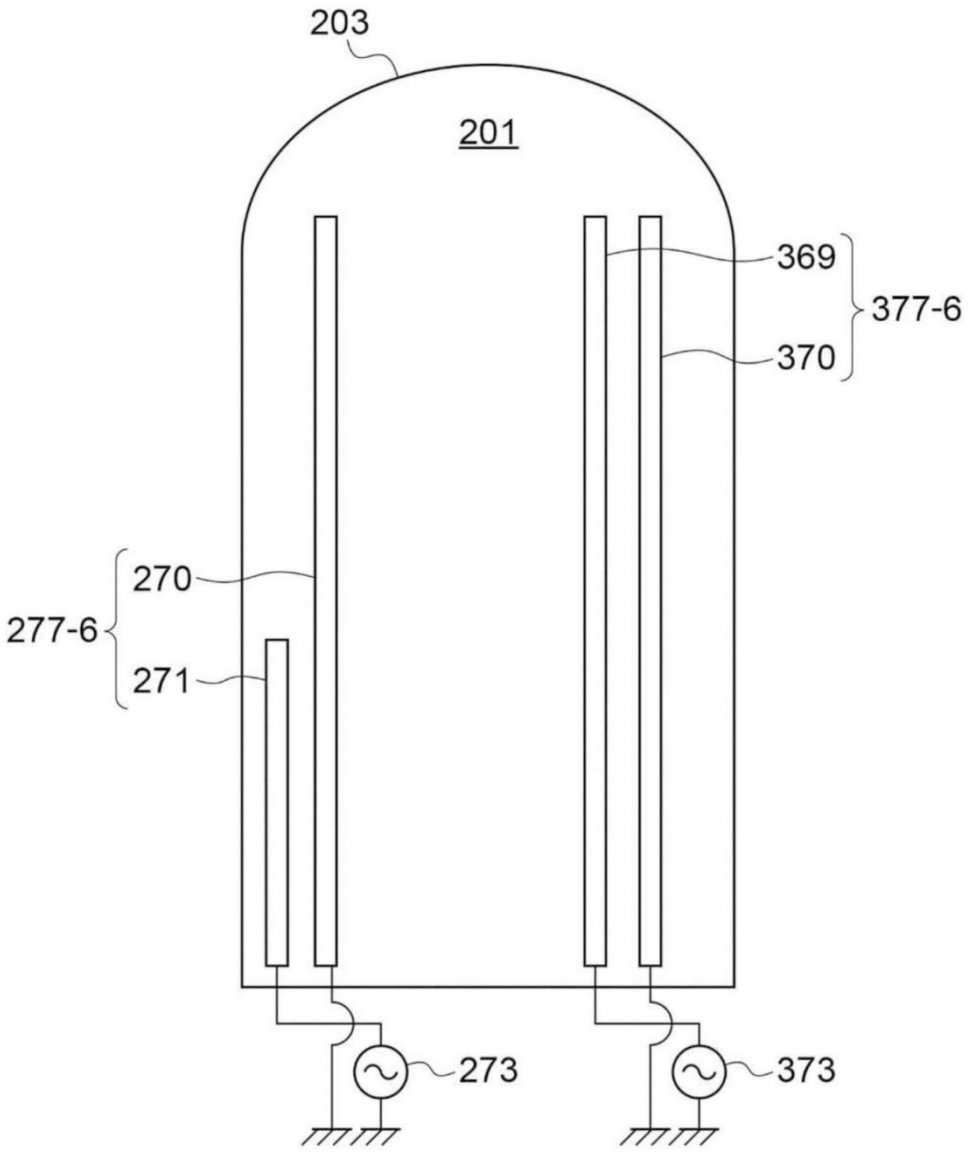

FIG. 15

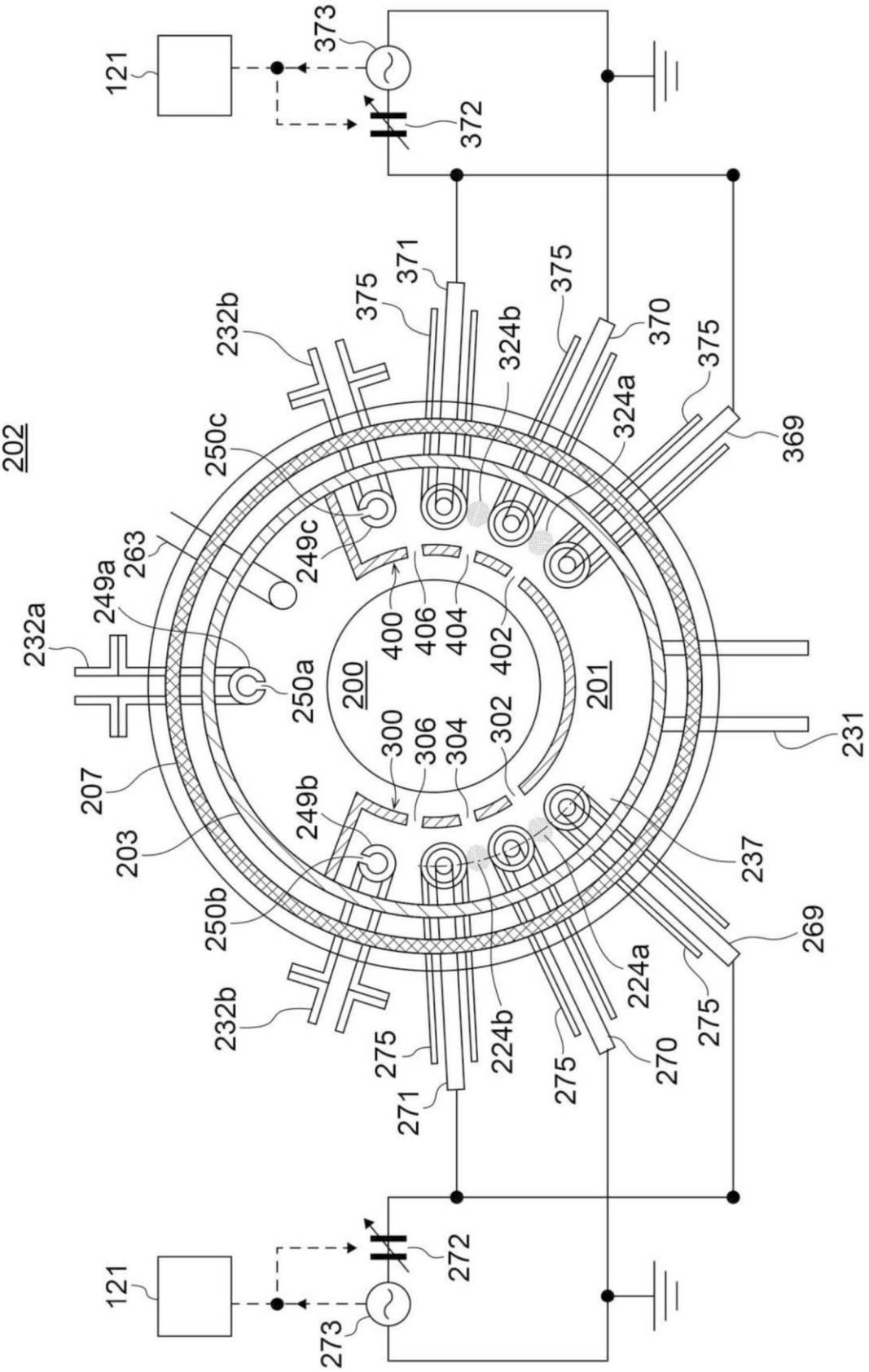
202
121
373
372
371
375
375
370
375
369
232b
324b
324a
250c
249c
263
249a
232a
250a
400
406
404
402
200
201
300
306
304
302
231
207
203
249b
237
250b
269
224a
275
232b
275
224b
275
270
271
121
272
273

FIG. 16

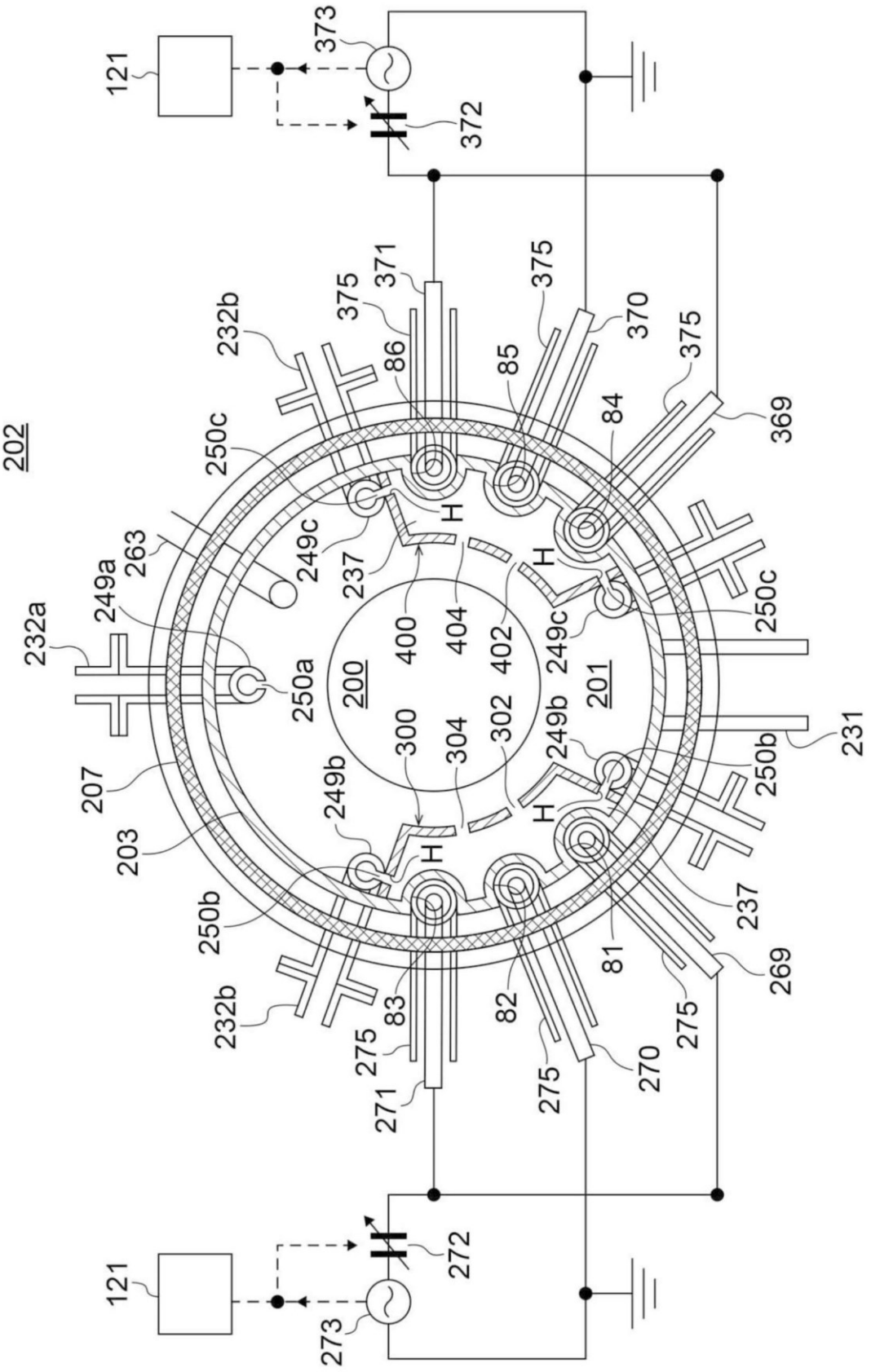
202
121
373
372
371
375
375
370
375
369
232b
86
85
84
250c
249c
237
263
249a
232a
250a
400
404
402
200
201
300
304
302
249b
250c
250b
231
207
203
249b
250b
237
81
269
275
270
275
82
83
275
271
232b
272
121
273

FIG. 17

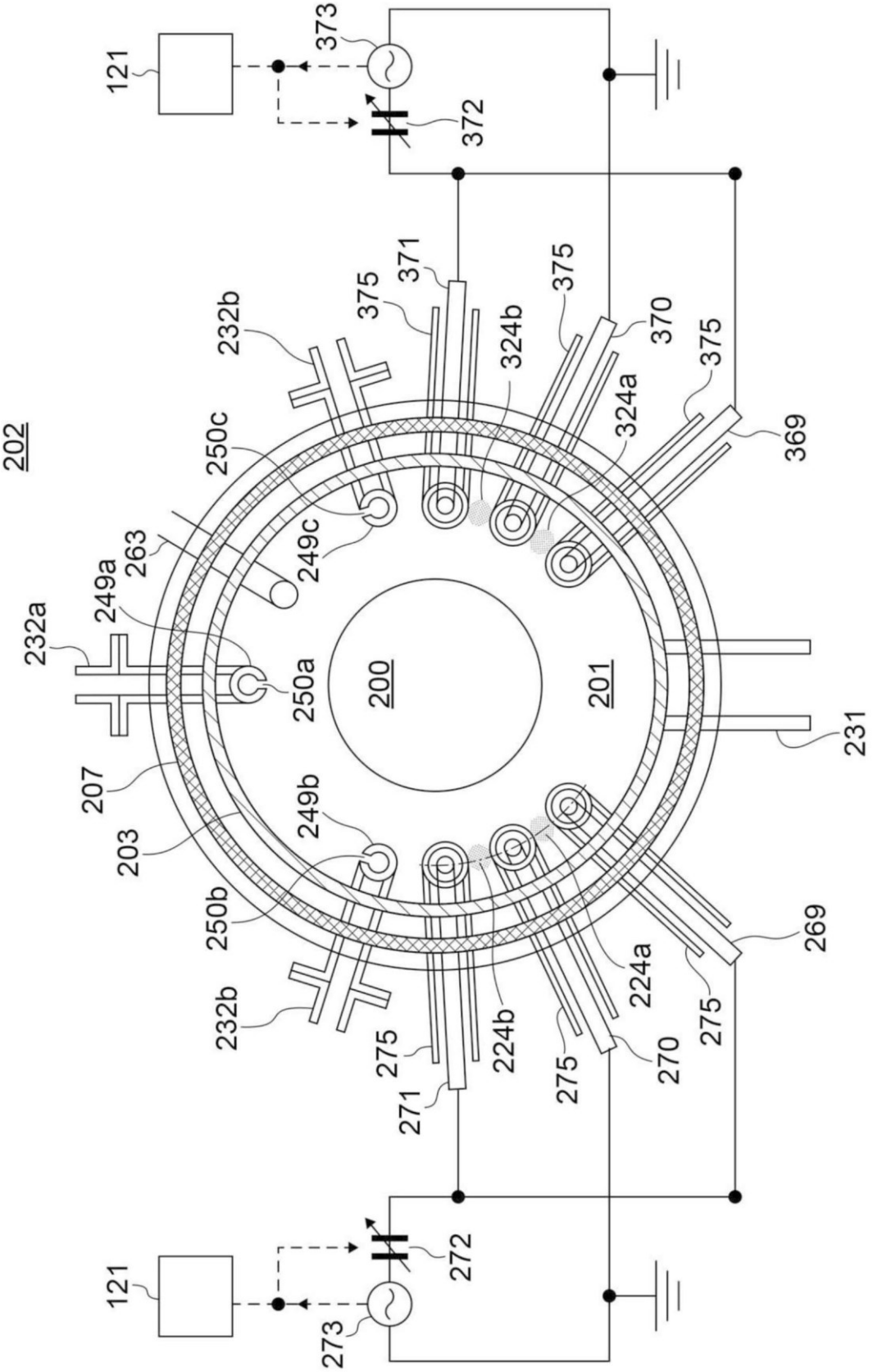
202
121
373
372
371
375
375
370
375
369
232b
324b
324a
250c
249c
263
249a
232a
250a
200
201
231
207
203
249b
250b
269
224a
275
232b
275
224b
275
270
271
121
272
273

FIG. 18

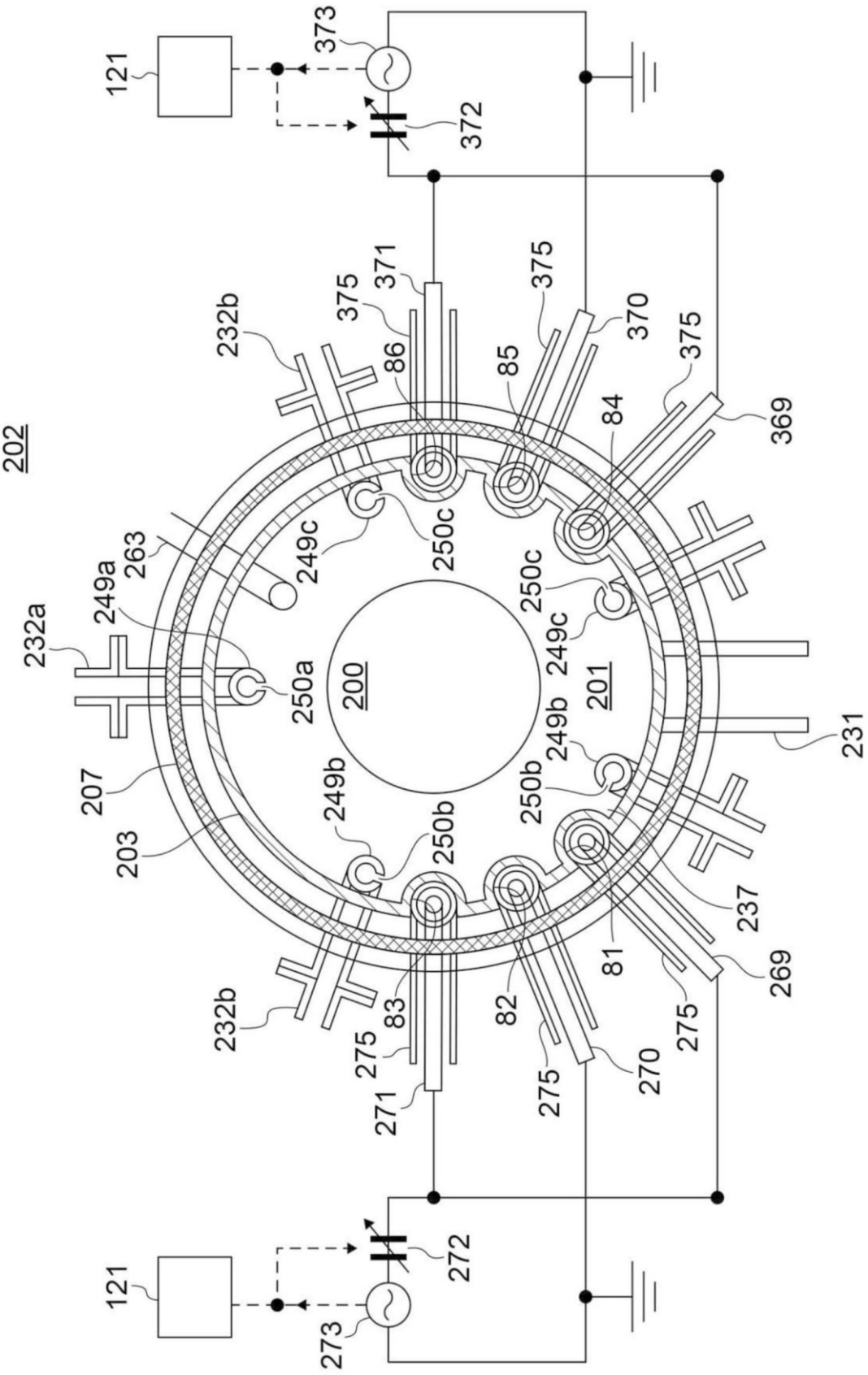
202
121
373
372
371
375
232b
86
85
84
370
369
263
249a
249c
250c
232a
250a
200
201
231
207
203
249b
250b
237
81
269
83
82
275
271
270
272
273

FIG. 19

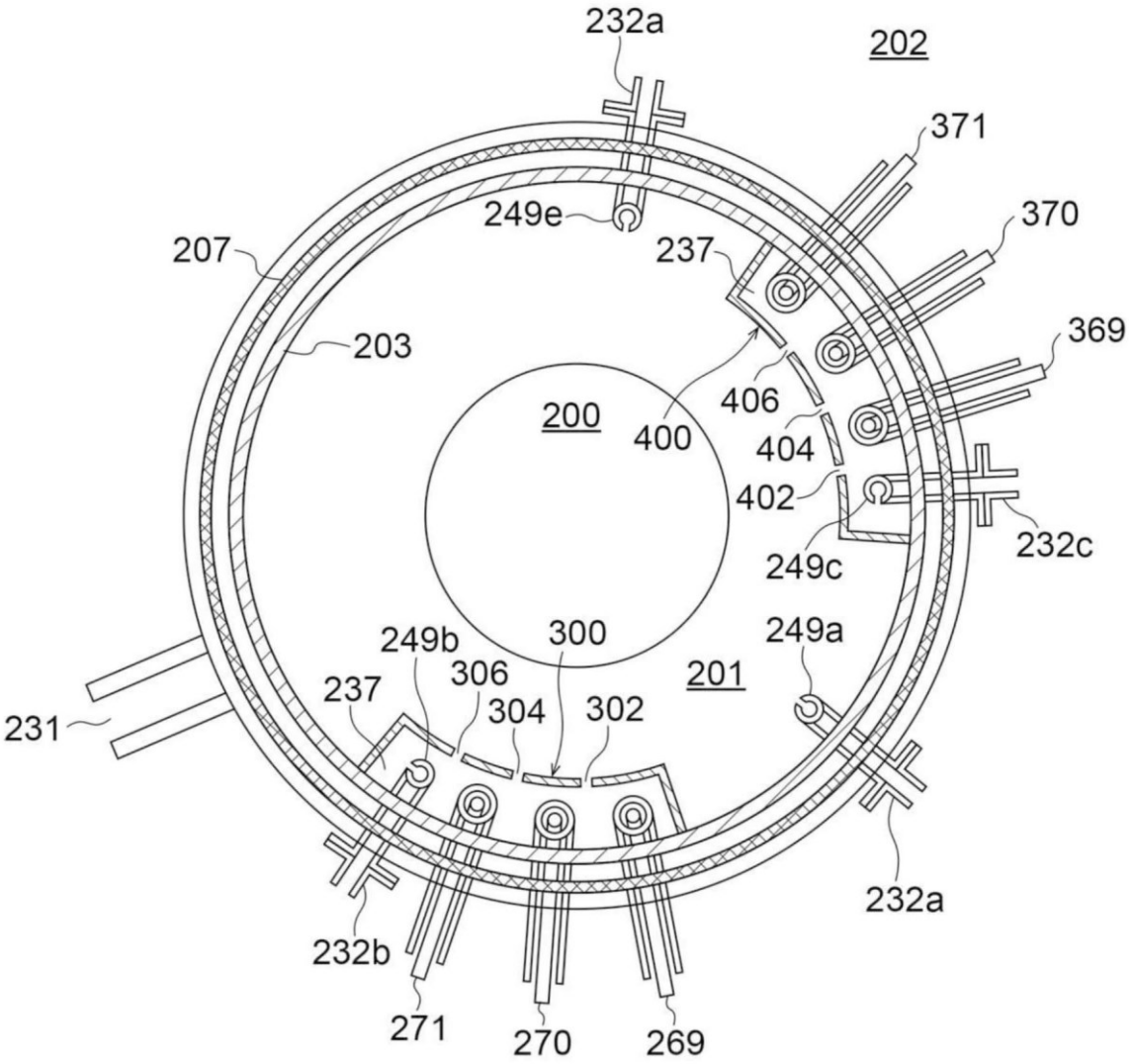
232a
202
371
249e
370
207
237
369
203
406
200
400
404
402
232c
249c
249b
300
249a
306
201
237
304
302
231
232a
232b
271
270
269

FIG. 20

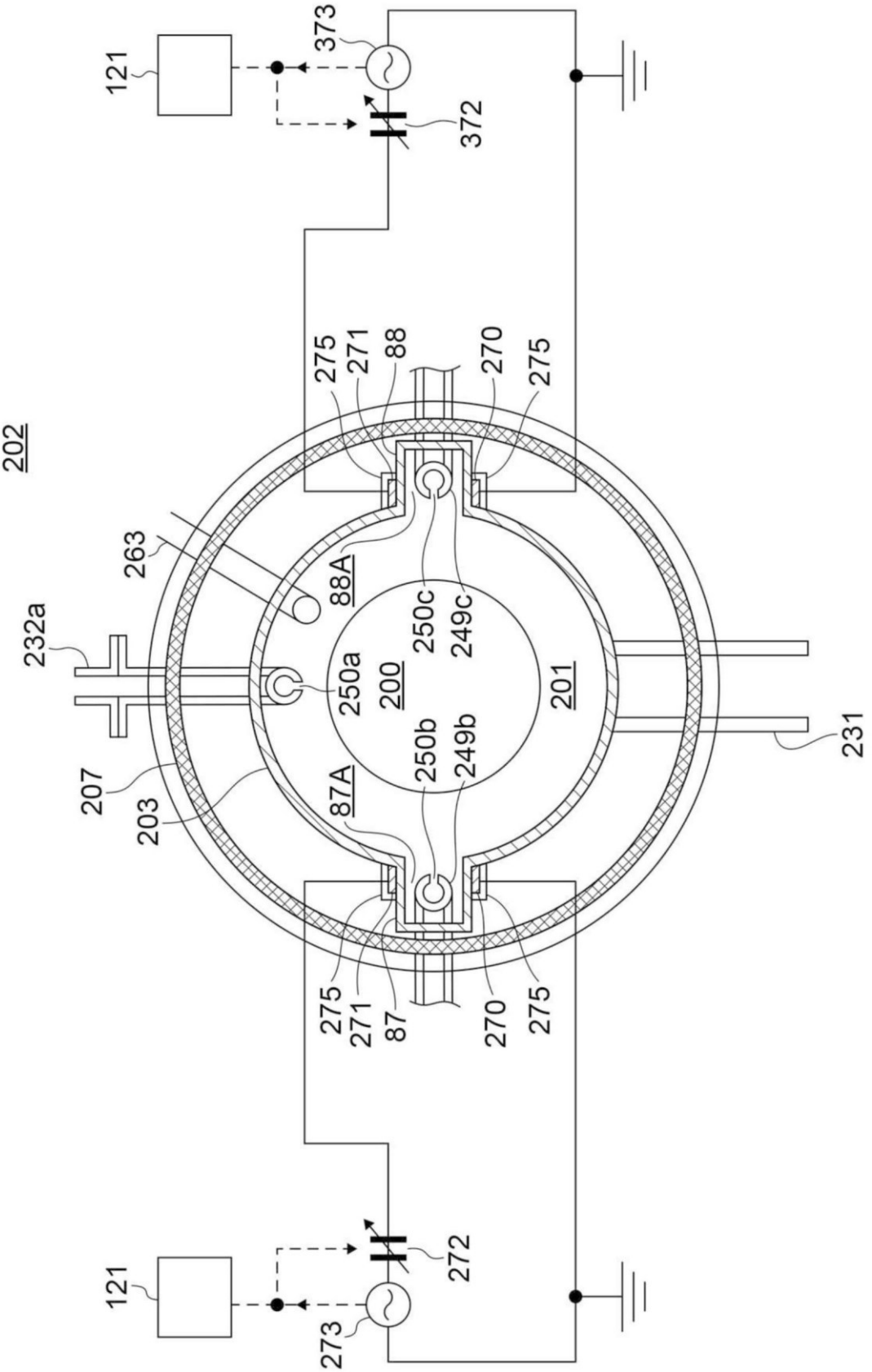
202
121
373
372
275
271
88
270
275
263
88A
232a
250c
249c
250a
200
201
231
207
203
250b
249b
87A
275
271
87
270
275
121
273
272