FIG. 1

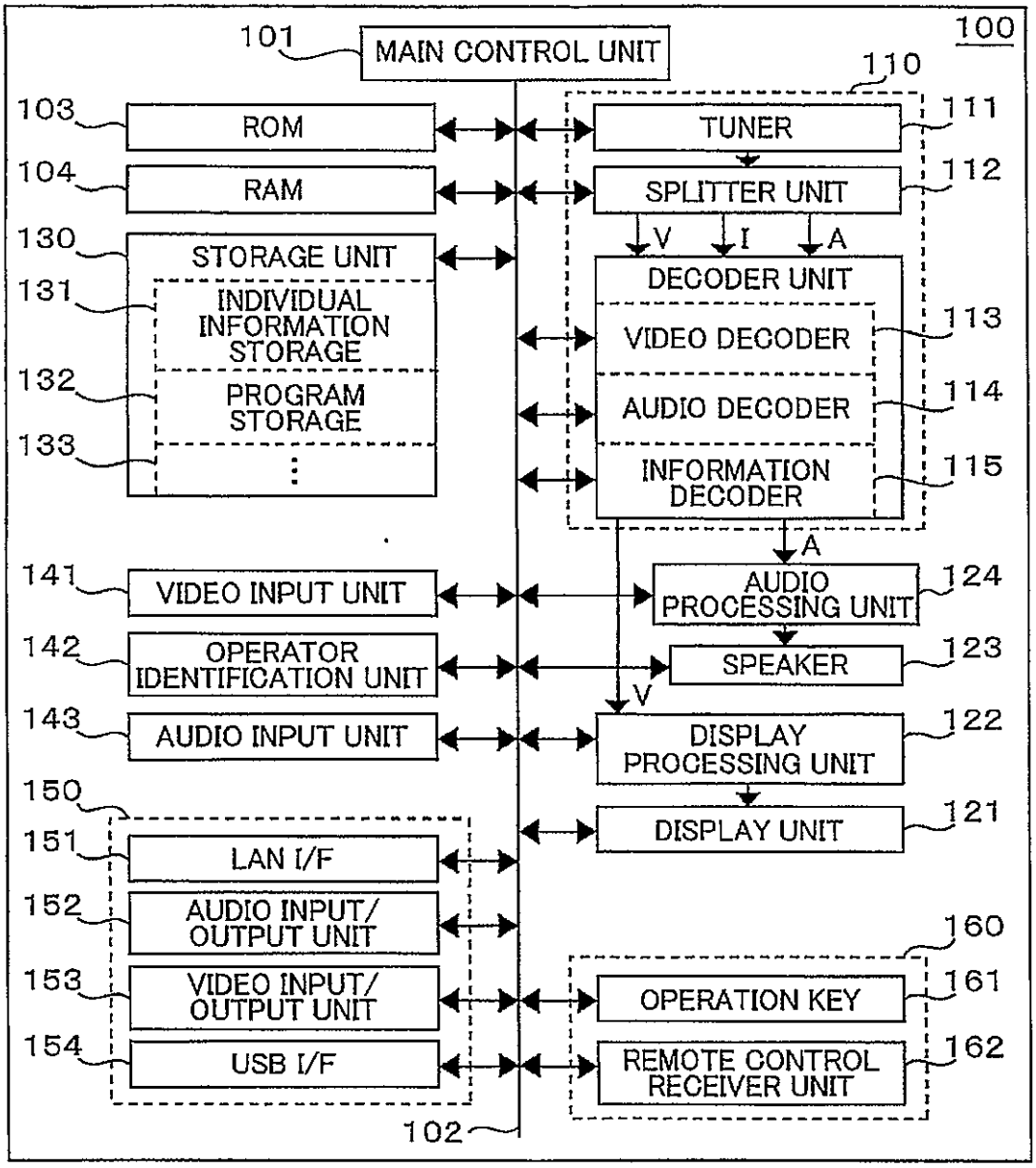
100
101
MAIN CONTROL UNIT
110
103
ROM
111
TUNER
104
RAM
112
SPLITTER UNIT
V
I
A
130
STORAGE UNIT
DECODER UNIT
131
INDIVIDUAL INFORMATION STORAGE
VIDEO DECODER
113
132
PROGRAM STORAGE
AUDIO DECODER
114
133
INFORMATION DECODER
115
A
141
VIDEO INPUT UNIT
AUDIO PROCESSING UNIT
124
142
OPERATOR IDENTIFICATION UNIT
SPEAKER
123
V
143
AUDIO INPUT UNIT
DISPLAY PROCESSING UNIT
122
150
DISPLAY UNIT
121
151
LAN I/F
152
AUDIO INPUT/ OUTPUT UNIT
160
153
VIDEO INPUT/ OUTPUT UNIT
OPERATION KEY
161
154
USB I/F
REMOTE CONTROL RECEIVER UNIT
162
102

FIG. 2

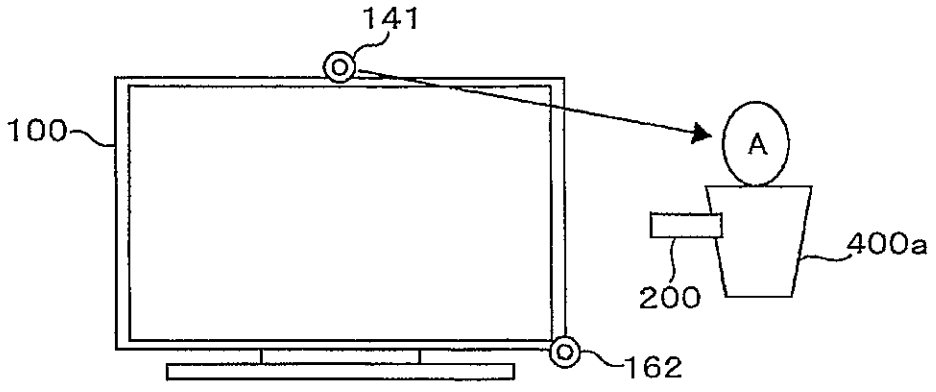
141
100
A
400a
200
162

FIG. 3

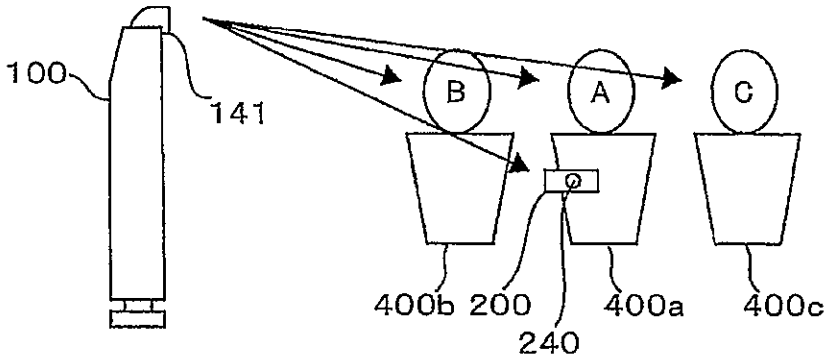

FIG. 4

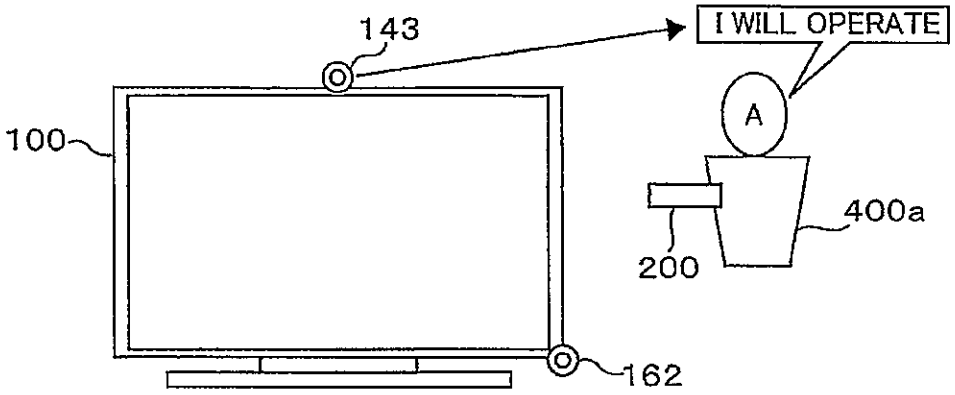

FIG. 5

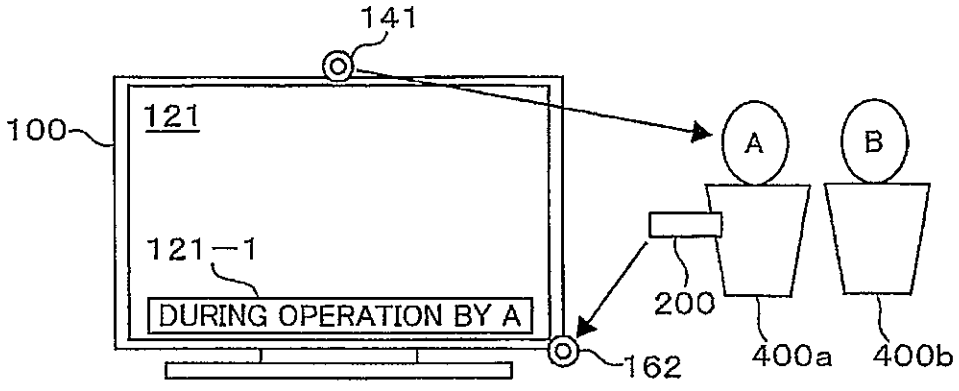

FIG. 6

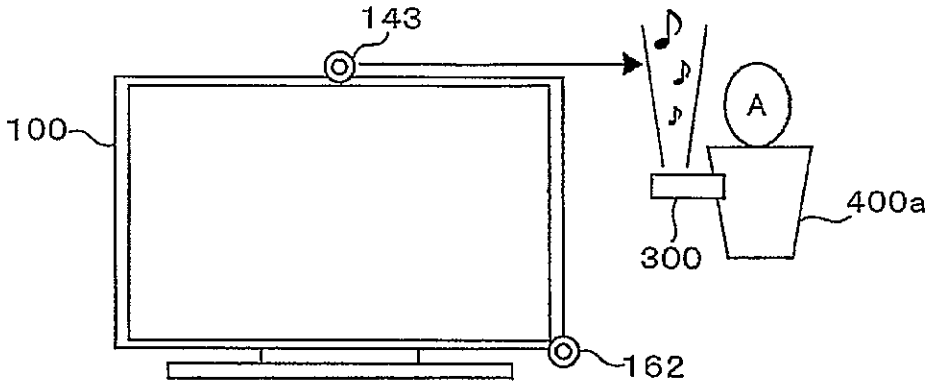
143
100
A
400a
300
162

FIG. 7

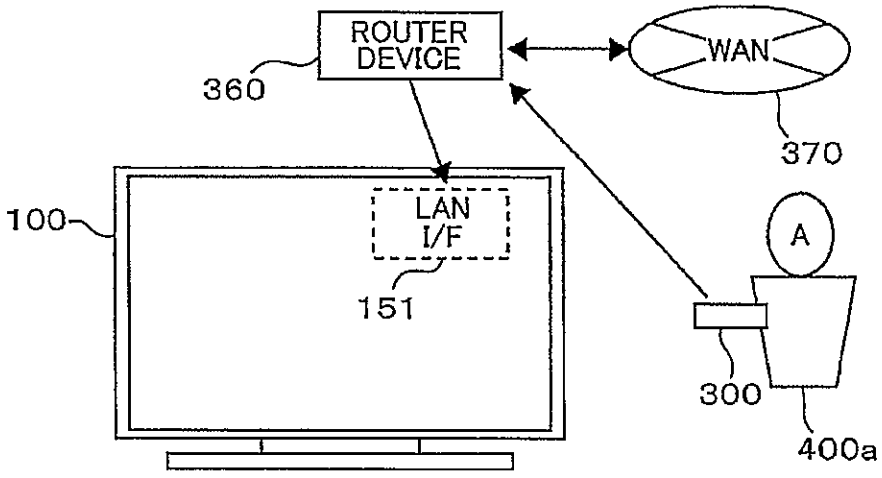
ROUTER DEVICE
360
WAN
370
100
LAN I/F
151
A
300
400a

FIG. 8

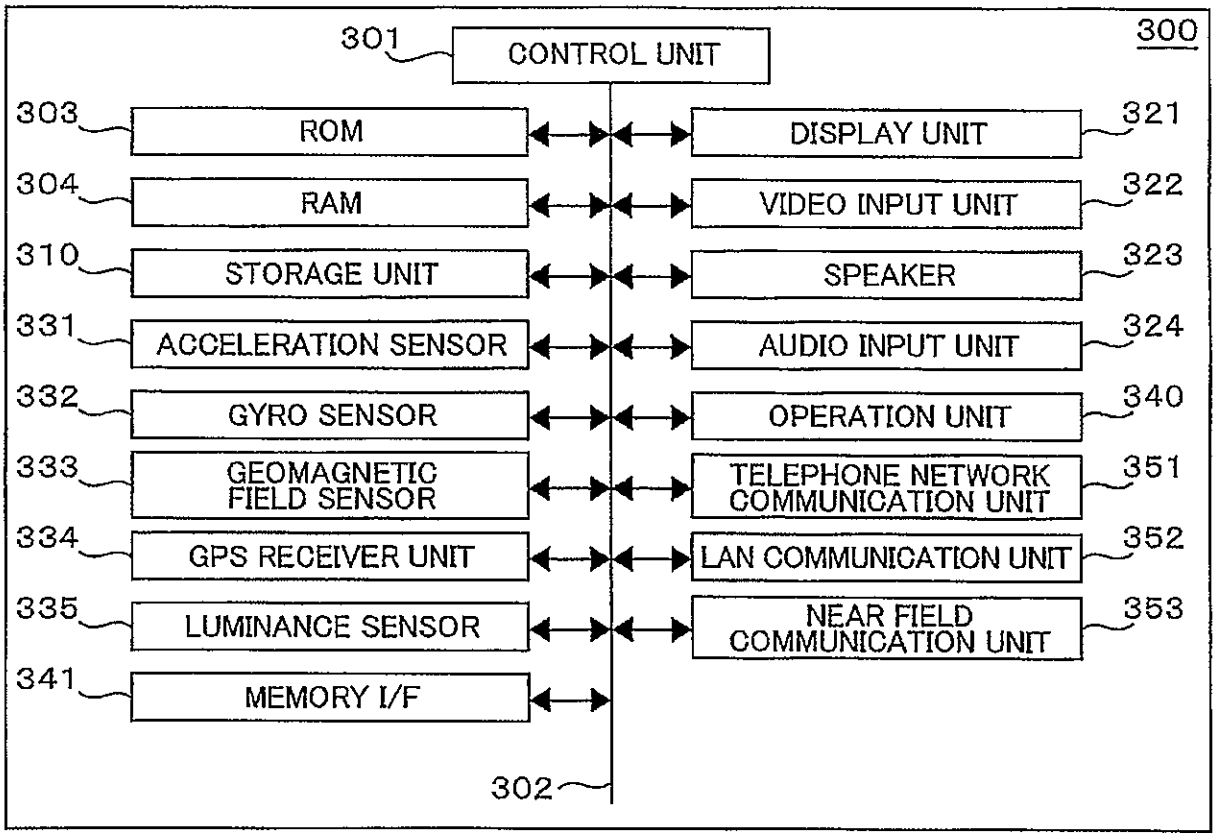
300
301
CONTROL UNIT
303
ROM
304
RAM
310
STORAGE UNIT
331
ACCELERATION SENSOR
332
GYRO SENSOR
333
GEOMAGNETIC FIELD SENSOR
334
GPS RECEIVER UNIT
335
LUMINANCE SENSOR
341
MEMORY I/F
302
321
DISPLAY UNIT
322
VIDEO INPUT UNIT
323
SPEAKER
324
AUDIO INPUT UNIT
340
OPERATION UNIT
351
TELEPHONE NETWORK COMMUNICATION UNIT
352
LAN COMMUNICATION UNIT
353
NEAR FIELD COMMUNICATION UNIT

FIG. 9

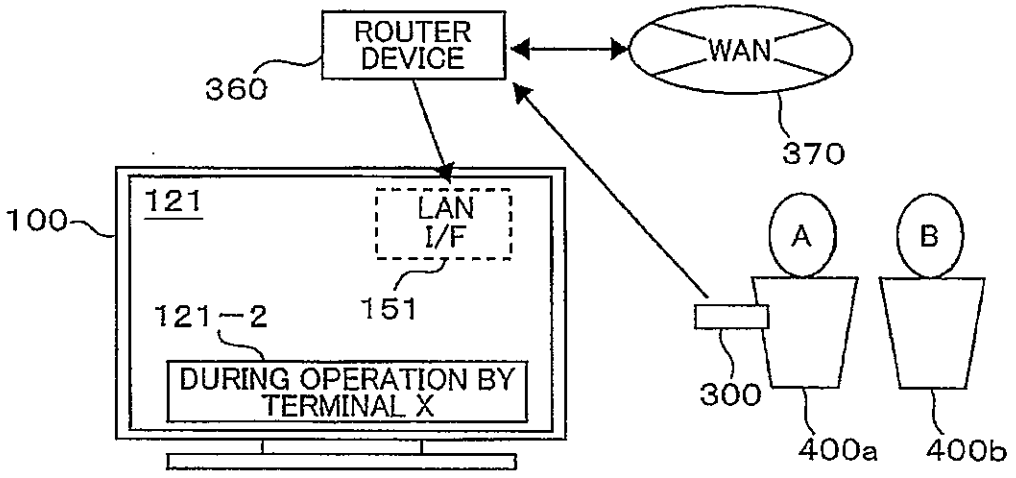
ROUTER DEVICE
360
WAN
370
100
121
LAN I/F
151
121-2
DURING OPERATION BY TERMINAL X
A
B
300
400a
400b

FIG. 10

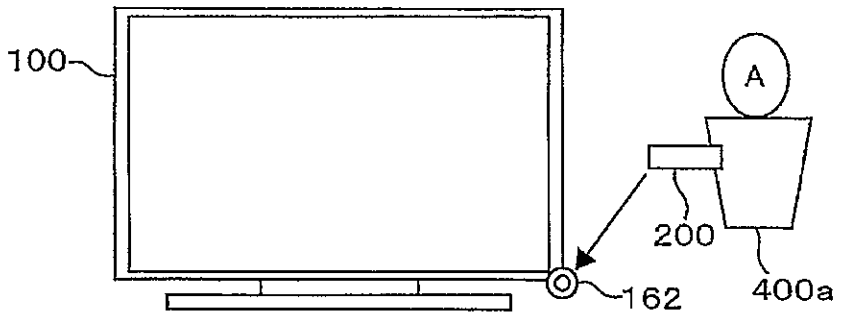
100
A
200
162
400a

FIG. 11

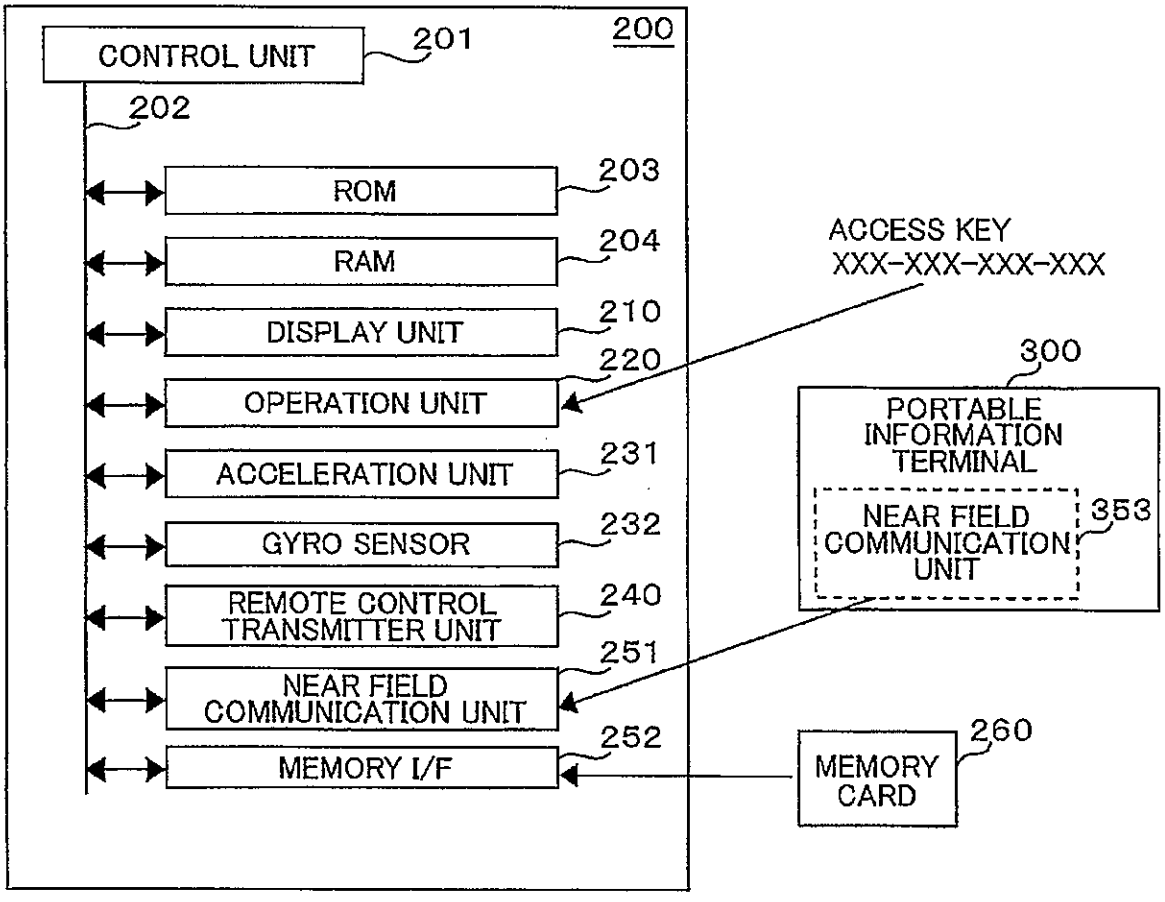
CONTROL UNIT
201
200
202
ROM
203
RAM
204
DISPLAY UNIT
210
OPERATION UNIT
220
ACCELERATION UNIT
231
GYRO SENSOR
232
REMOTE CONTROL TRANSMITTER UNIT
240
NEAR FIELD COMMUNICATION UNIT
251
MEMORY I/F
252
ACCESS KEY
XXX-XXX-XXX-XXX
300
PORTABLE INFORMATION TERMINAL
NEAR FIELD COMMUNICATION UNIT
353
MEMORY CARD
260

FIG. 12

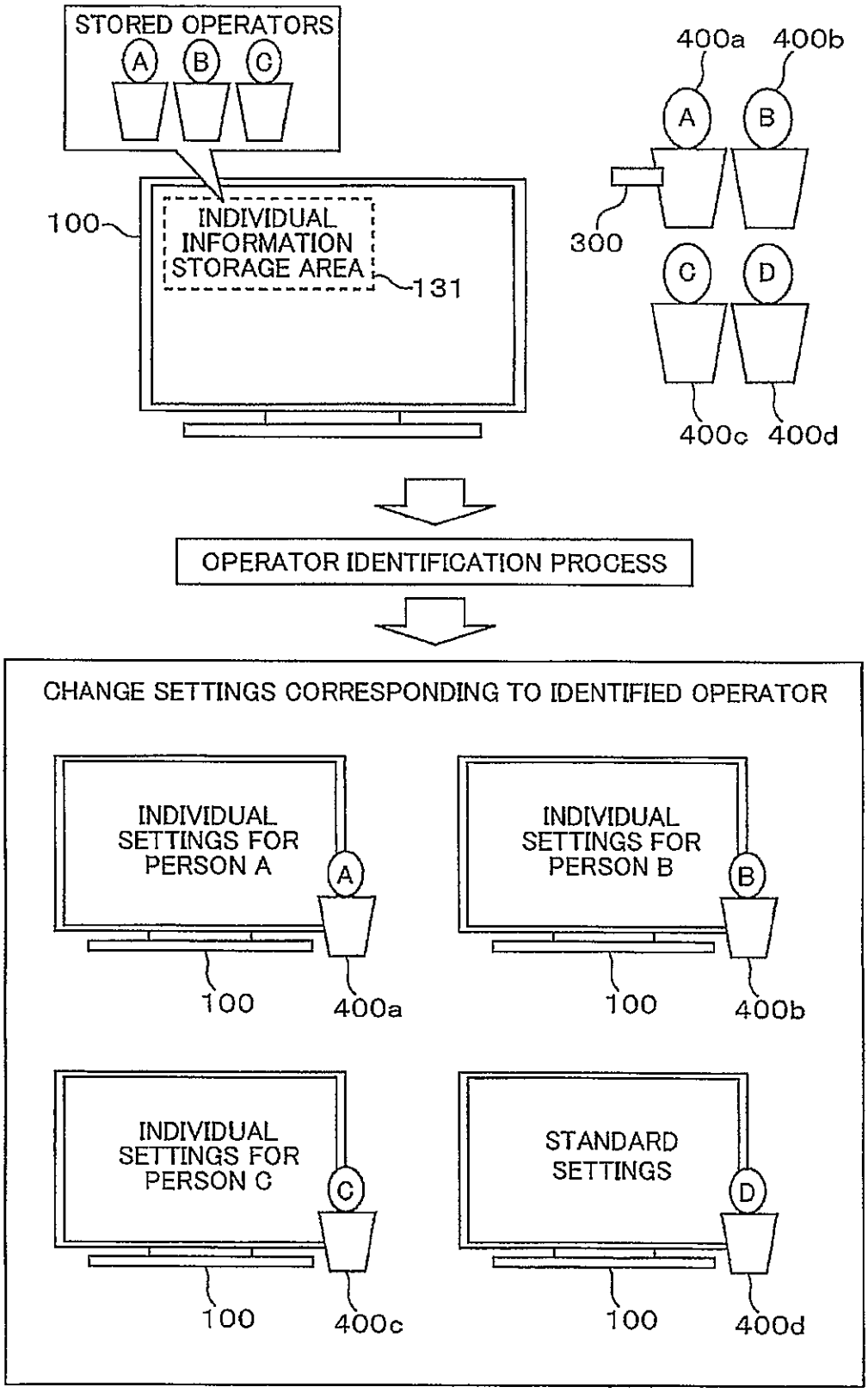
STORED OPERATORS
A
B
C
100
INDIVIDUAL INFORMATION STORAGE AREA
131
400a
400b
A
B
300
C
D
400c
400d
OPERATOR IDENTIFICATION PROCESS
CHANGE SETTINGS CORRESPONDING TO IDENTIFIED OPERATOR
INDIVIDUAL SETTINGS FOR PERSON A
A
100
400a
INDIVIDUAL SETTINGS FOR PERSON B
B
100
400b
INDIVIDUAL SETTINGS FOR PERSON C
C
100
400c
STANDARD SETTINGS
D
100
400d

FIG. 13

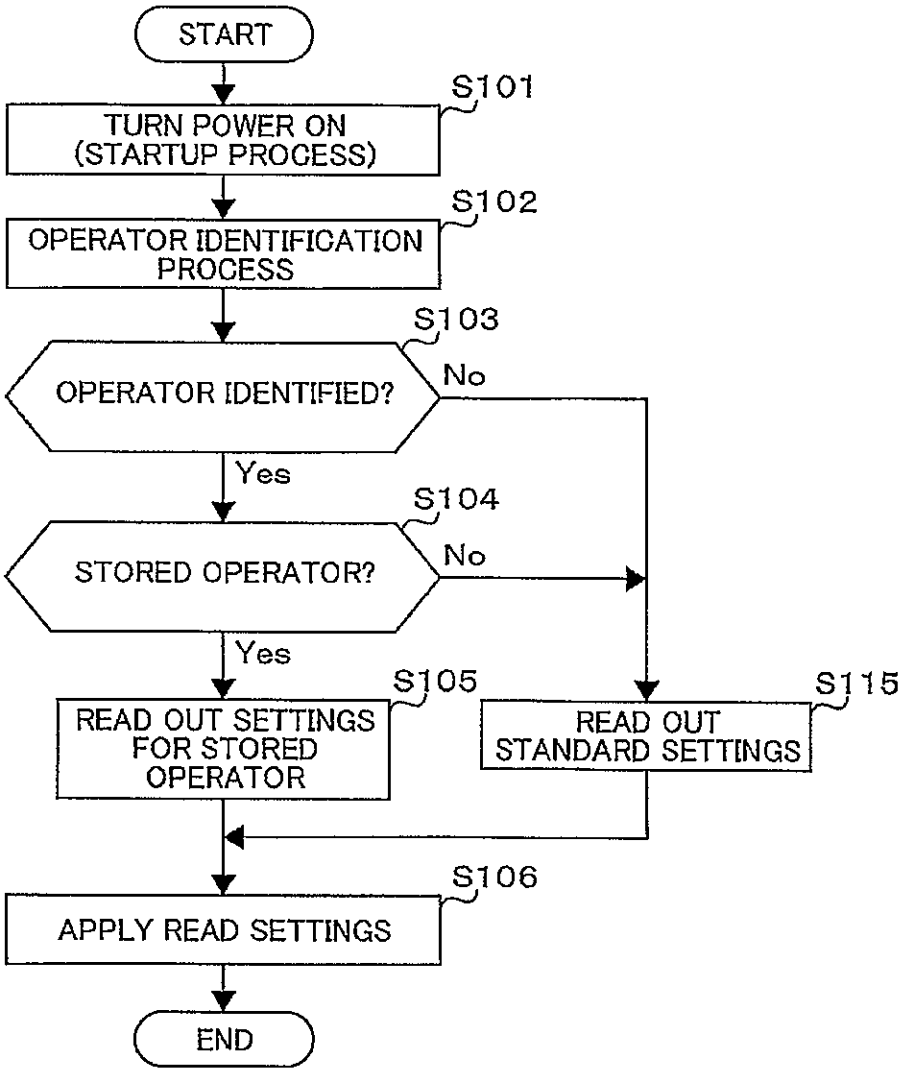
START
S101
TURN POWER ON (STARTUP PROCESS)
S102
OPERATOR IDENTIFICATION PROCESS
S103
OPERATOR IDENTIFIED?
No
Yes
S104
STORED OPERATOR?
No
Yes
S105
READ OUT SETTINGS FOR STORED OPERATOR
S115
READ OUT STANDARD SETTINGS
S106
APPLY READ SETTINGS
END

FIG. 14

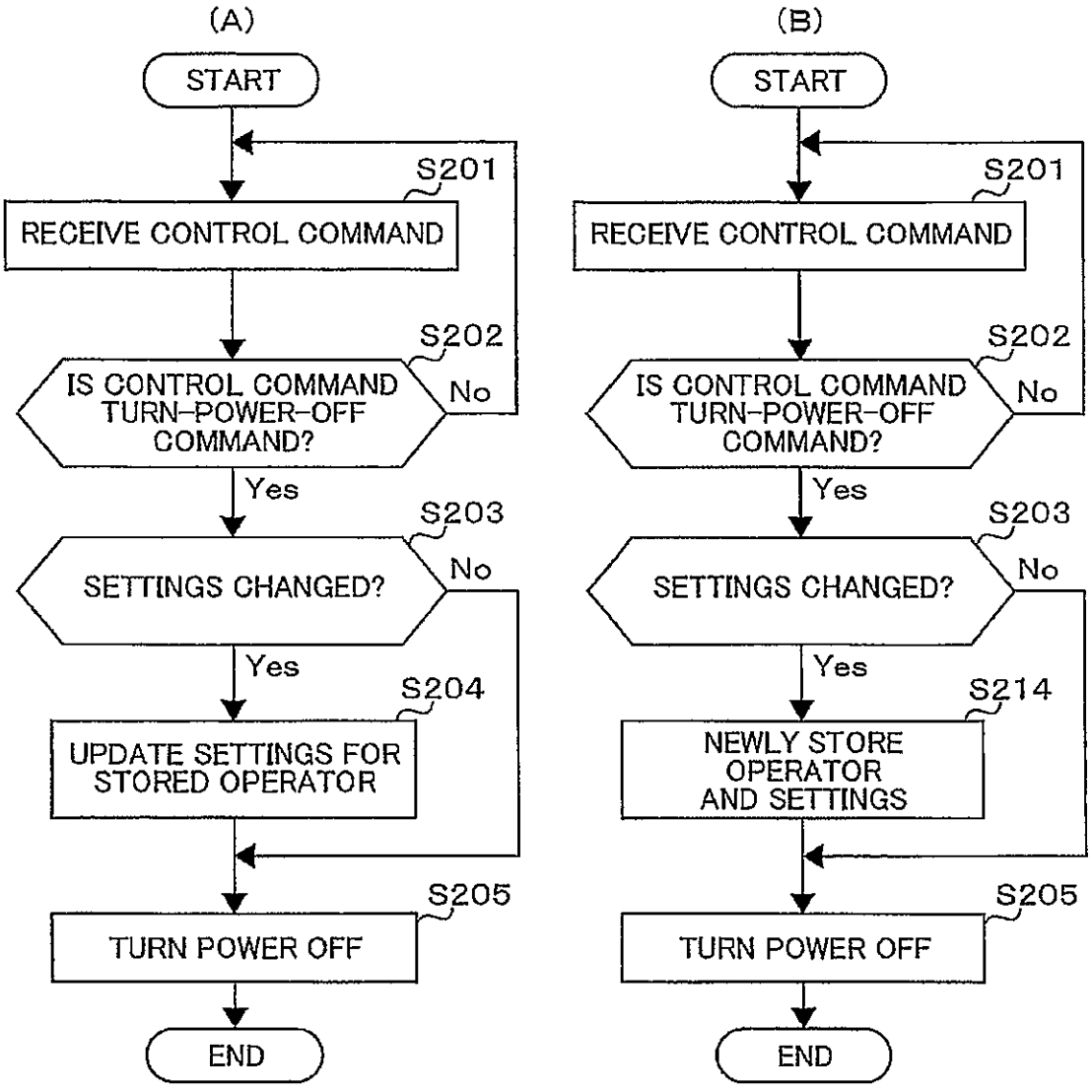
(A)
START
S201
RECEIVE CONTROL COMMAND
S202
IS CONTROL COMMAND TURN-POWER-OFF COMMAND?
No
Yes
S203
SETTINGS CHANGED?
No
Yes
S204
UPDATE SETTINGS FOR STORED OPERATOR
S205
TURN POWER OFF
END
(B)
START
S201
RECEIVE CONTROL COMMAND
S202
IS CONTROL COMMAND TURN-POWER-OFF COMMAND?
No
Yes
S203
SETTINGS CHANGED?
No
Yes
S214
NEWLY STORE OPERATOR AND SETTINGS
S205
TURN POWER OFF
END

FIG. 15

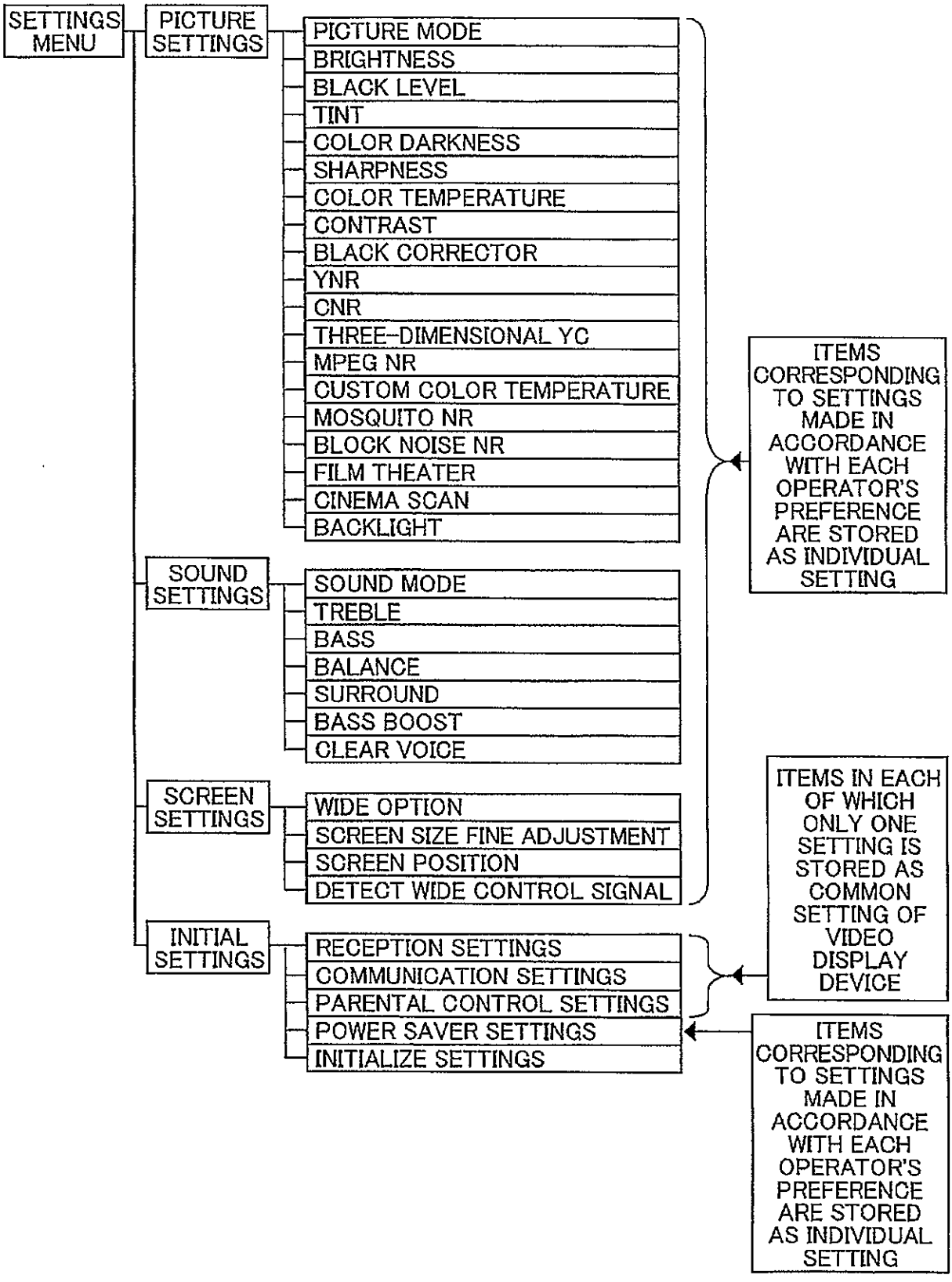
SETTINGS MENU
PICTURE SETTINGS
PICTURE MODE
BRIGHTNESS
BLACK LEVEL
TINT
COLOR DARKNESS
SHARPNESS
COLOR TEMPERATURE
CONTRAST
BLACK CORRECTOR
YNR
CNR
THREE-DIMENSIONAL YC
MPEG NR
CUSTOM COLOR TEMPERATURE
MOSQUITO NR
BLOCK NOISE NR
FILM THEATER
CINEMA SCAN
BACKLIGHT
SOUND SETTINGS
SOUND MODE
TREBLE
BASS
BALANCE
SURROUND
BASS BOOST
CLEAR VOICE
SCREEN SETTINGS
WIDE OPTION
SCREEN SIZE FINE ADJUSTMENT
SCREEN POSITION
DETECT WIDE CONTROL SIGNAL
INITIAL SETTINGS
RECEPTION SETTINGS
COMMUNICATION SETTINGS
PARENTAL CONTROL SETTINGS
POWER SAVER SETTINGS
INITIALIZE SETTINGS
ITEMS CORRESPONDING TO SETTINGS MADE IN ACCORDANCE WITH EACH OPERATOR'S PREFERENCE ARE STORED AS INDIVIDUAL SETTING
ITEMS IN EACH OF WHICH ONLY ONE SETTING IS STORED AS COMMON SETTING OF VIDEO DISPLAY DEVICE
ITEMS CORRESPONDING TO SETTINGS MADE IN ACCORDANCE WITH EACH OPERATOR'S PREFERENCE ARE STORED AS INDIVIDUAL SETTING

FIG. 16

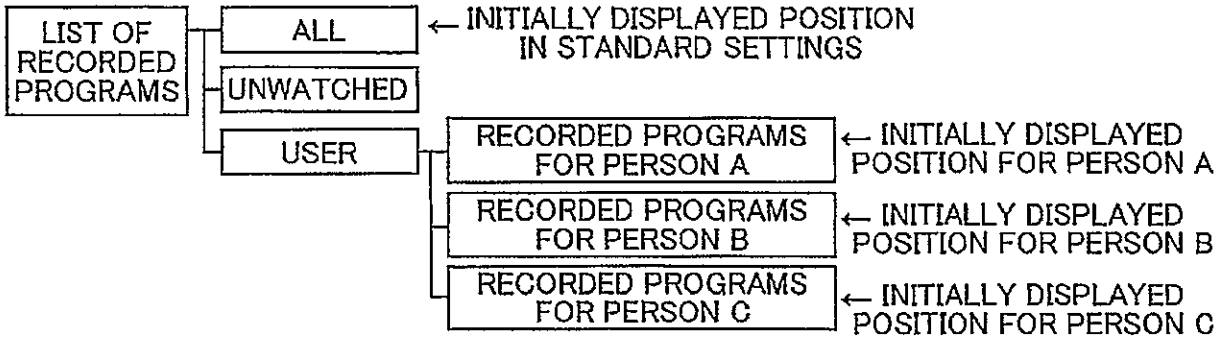
LIST OF RECORDED PROGRAMS
ALL
← INITIALLY DISPLAYED POSITION IN STANDARD SETTINGS
UNWATCHED
USER
RECORDED PROGRAMS FOR PERSON A
← INITIALLY DISPLAYED POSITION FOR PERSON A
RECORDED PROGRAMS FOR PERSON B
← INITIALLY DISPLAYED POSITION FOR PERSON B
RECORDED PROGRAMS FOR PERSON C
← INITIALLY DISPLAYED POSITION FOR PERSON C

FIG. 17

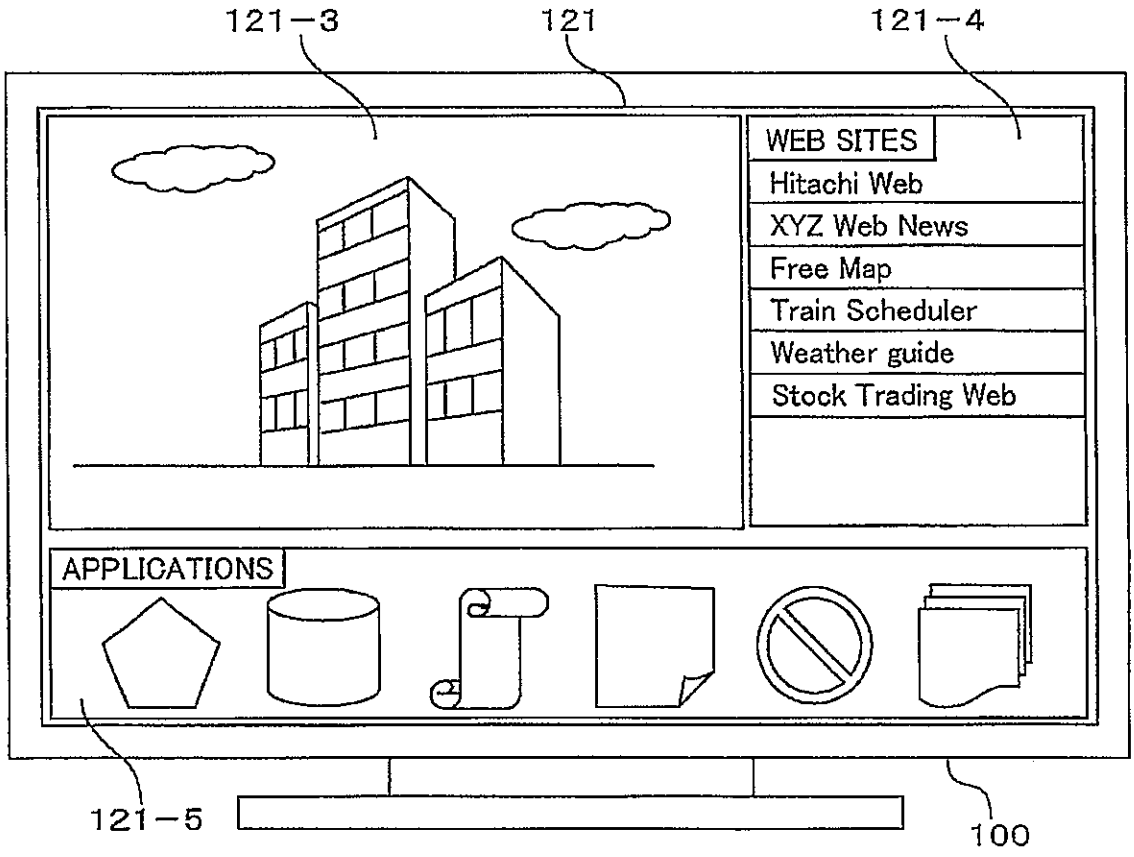
121−3
121
121−4
WEB SITES
Hitachi Web
XYZ Web News
Free Map
Train Scheduler
Weather guide
Stock Trading Web
APPLICATIONS
121−5
100