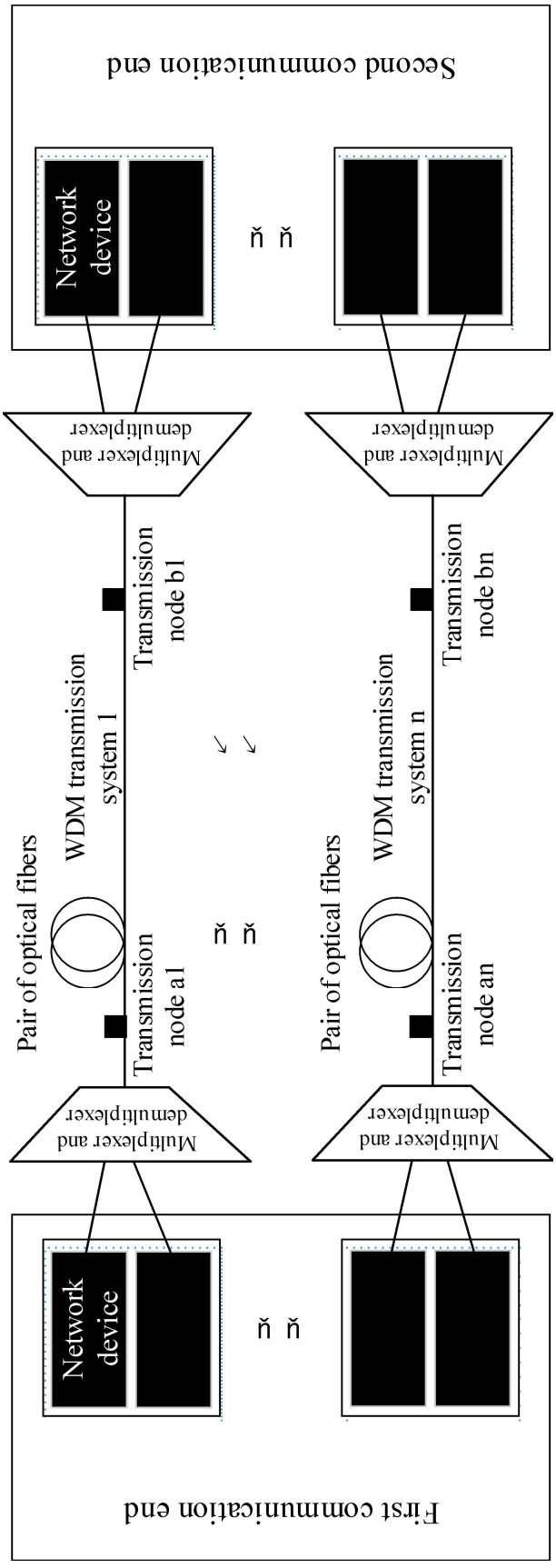
First communication end
Second communication end
Network device
Network device
Multiplexer and demultiplexer
Multiplexer and demultiplexer
Multiplexer and demultiplexer
Multiplexer and demultiplexer
Transmission node a1
Transmission node an
Transmission node b1
Transmission node bn
Pair of optical fibers
Pair of optical fibers
WDM transmission system 1
WDM transmission system n

FIG. 1

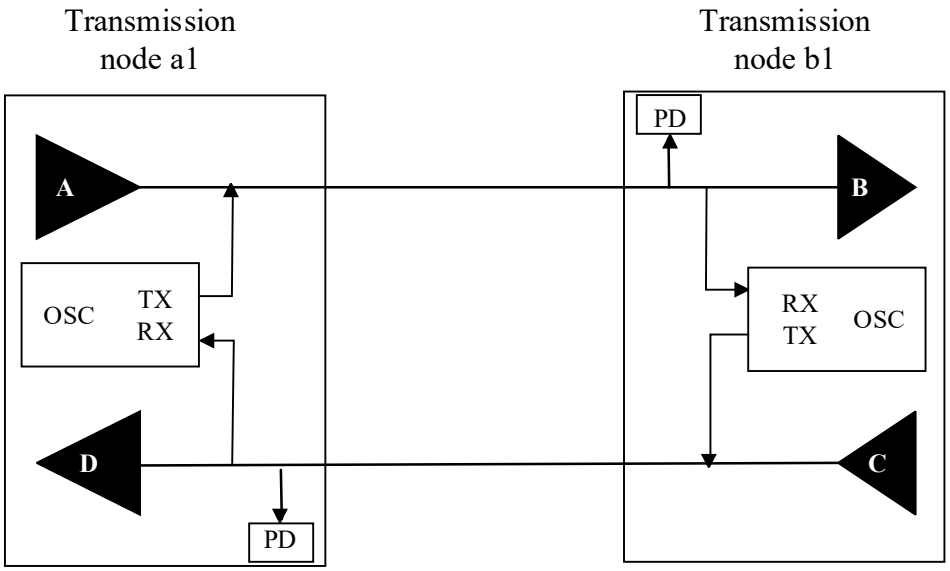
Transmission
node a1
Transmission
node b1
PD
A
B
OSC
TX
RX
RX
TX
OSC
D
C
PD

FIG. 2

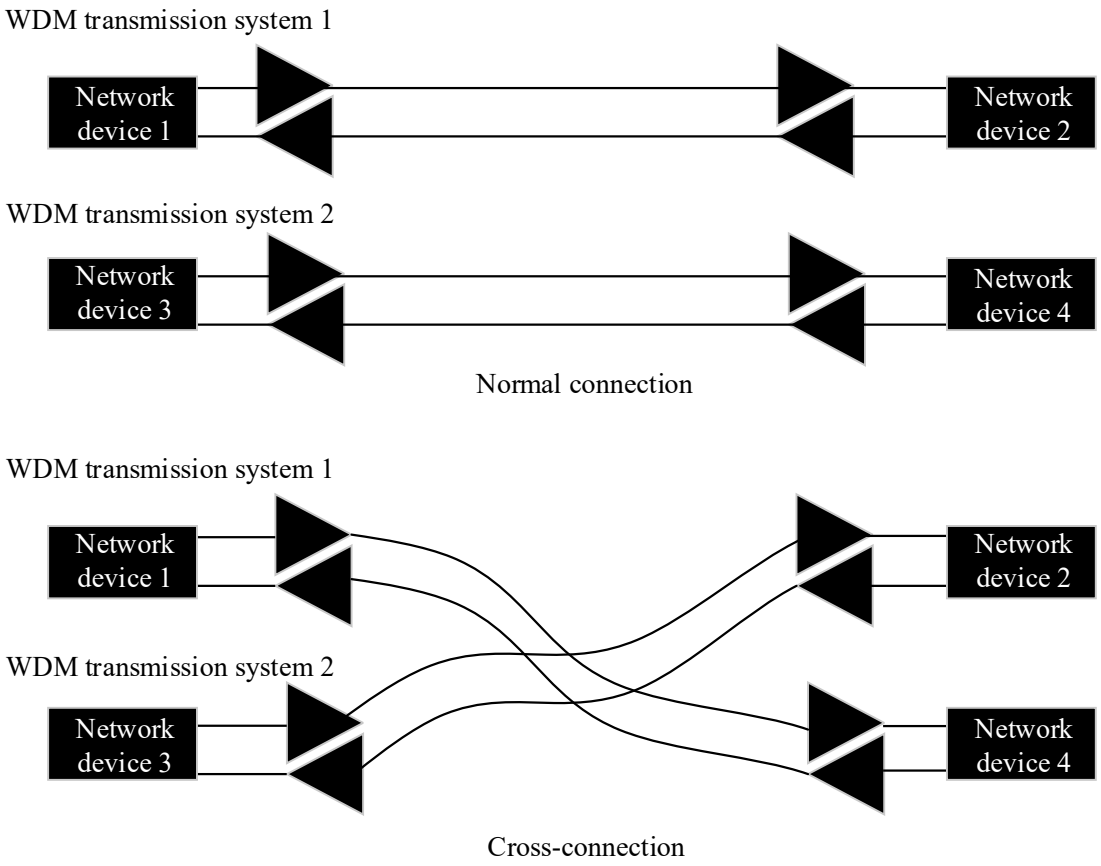
WDM transmission system 1
Network device 1
Network device 2
WDM transmission system 2
Network device 3
Network device 4
Normal connection
WDM transmission system 1
Network device 1
Network device 2
WDM transmission system 2
Network device 3
Network device 4
Cross-connection

FIG. 3

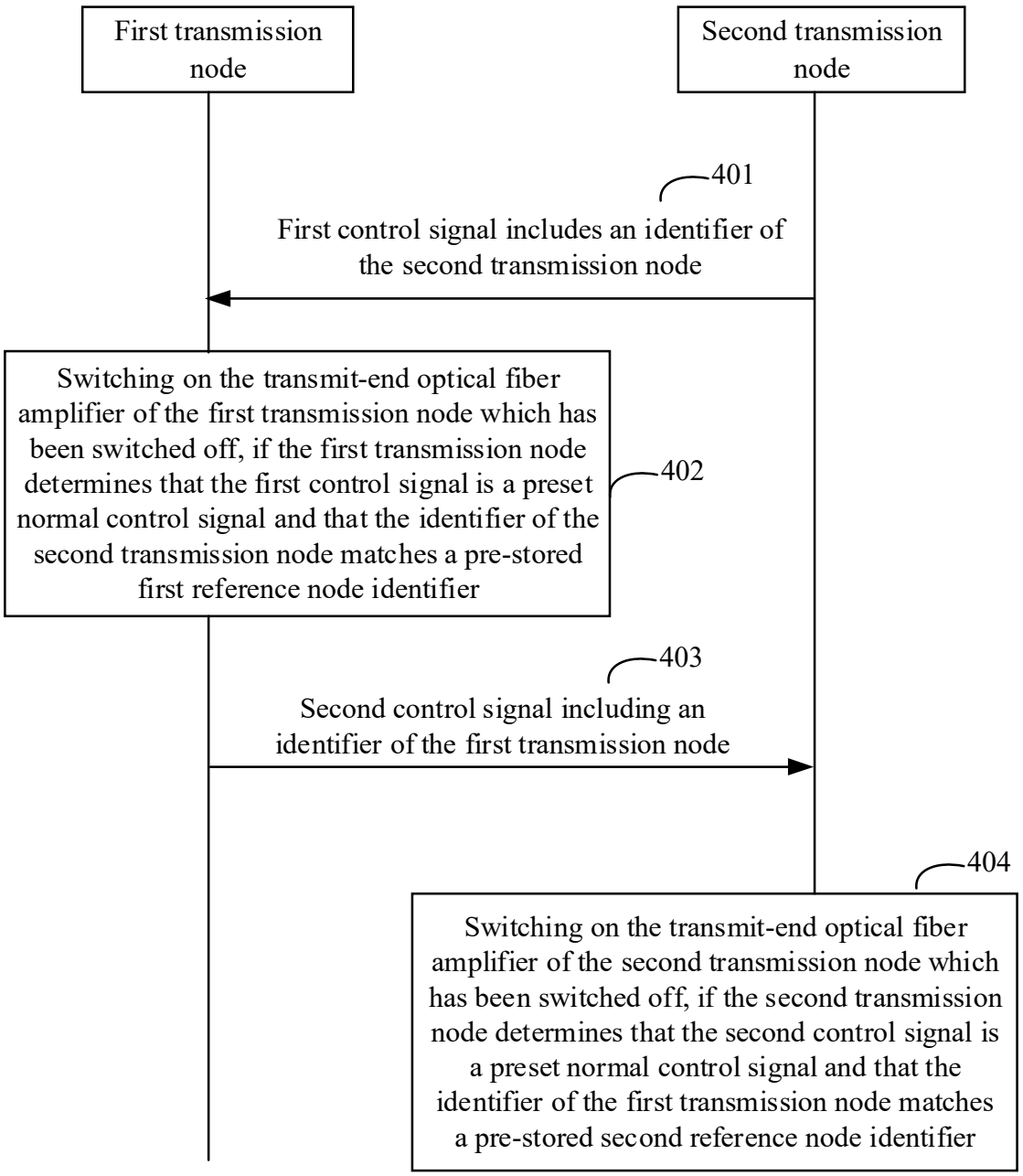
First transmission node
Second transmission node
401
First control signal includes an identifier of the second transmission node
Switching on the transmit-end optical fiber amplifier of the first transmission node which has been switched off, if the first transmission node determines that the first control signal is a preset normal control signal and that the identifier of the second transmission node matches a pre-stored first reference node identifier
402
403
Second control signal including an identifier of the first transmission node
404
Switching on the transmit-end optical fiber amplifier of the second transmission node which has been switched off, if the second transmission node determines that the second control signal is a preset normal control signal and that the identifier of the first transmission node matches a pre-stored second reference node identifier

FIG. 4

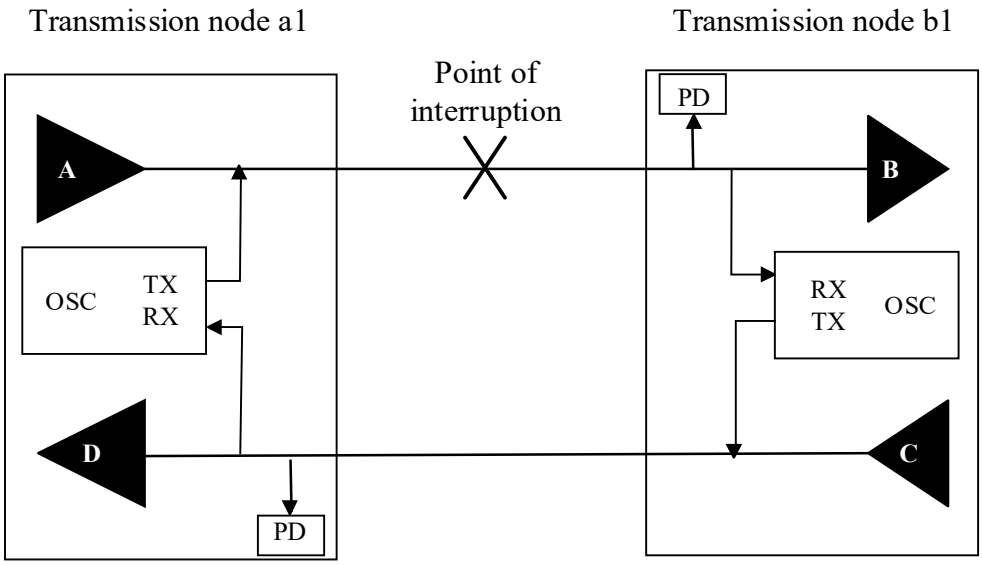
Transmission node a1
Transmission node b1
Point of interruption
PD
A
B
OSC
TX
RX
RX
TX
OSC
D
C
PD

FIG. 5

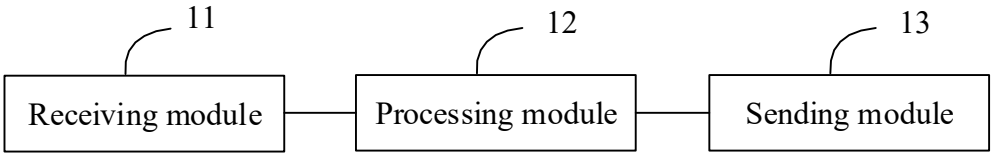
11
12
13
Receiving module
Processing module
Sending module

FIG. 6

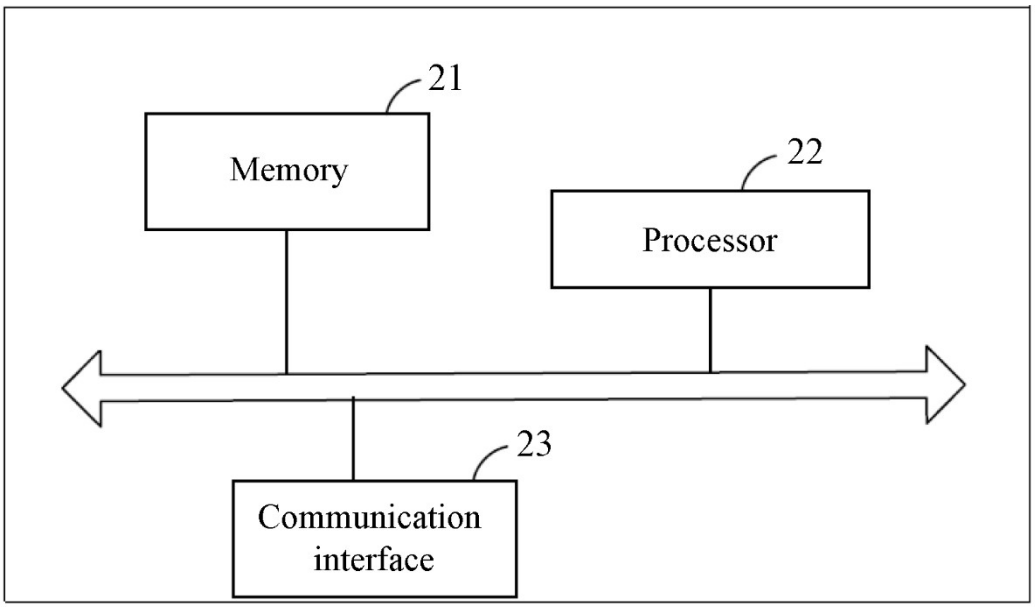

FIG. 7