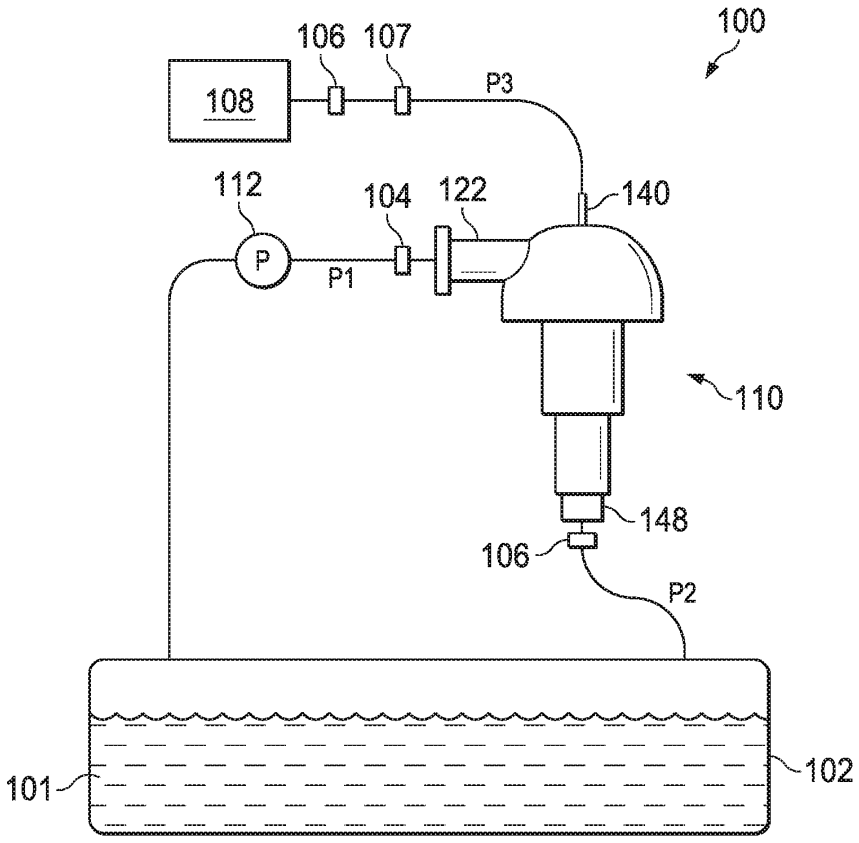

Fig. 1

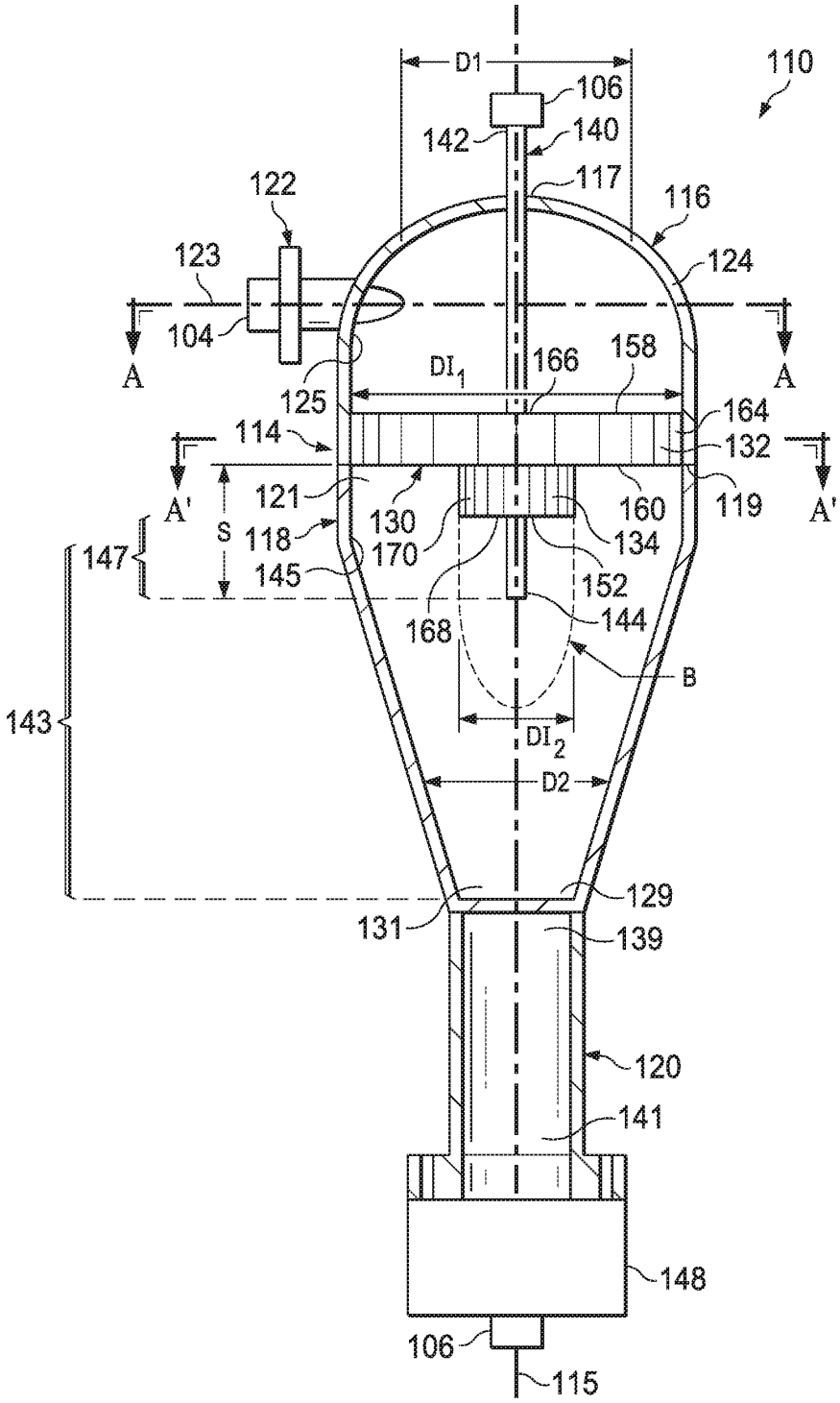
D1
110
106
142
140
117
116
122
123
124
104
A
A
DI1
166
158
125
164
114
132
A'
A'
121
130
160
119
S
118
134
147
170
145
152
168
144
B
143
DI2
D2
129
131
139
120
141
148
106
115

Fig. 2A

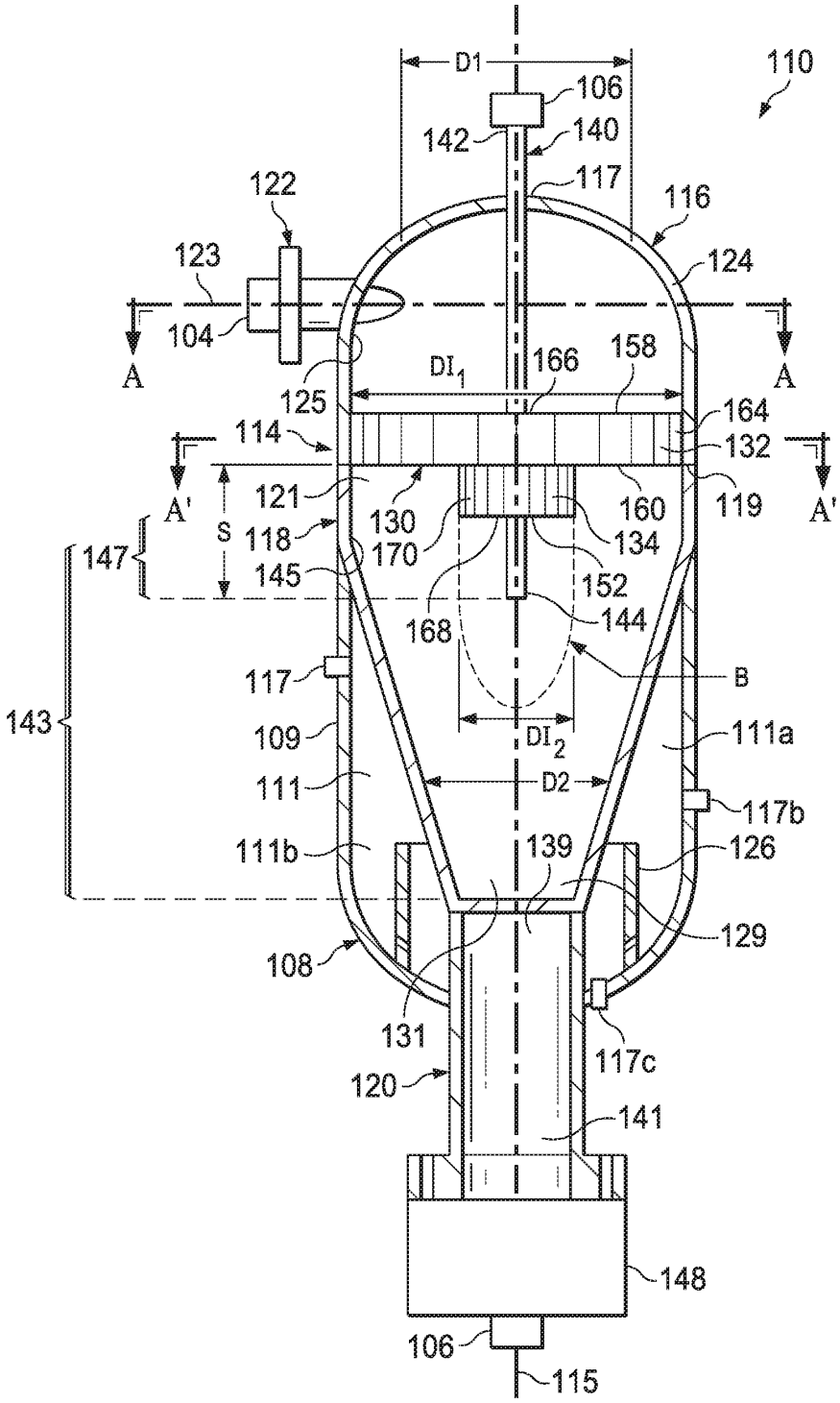
D1
110
106
142
140
117
122
116
123
124
104
A
A
DI1
166
158
125
164
114
132
A'
A'
121
130
160
119
S
118
134
147
170
145
152
168
144
117
B
143
109
DI2
111a
111
D2
117b
111b
139
126
129
108
131
117c
120
141
148
106
115

Fig. 2B

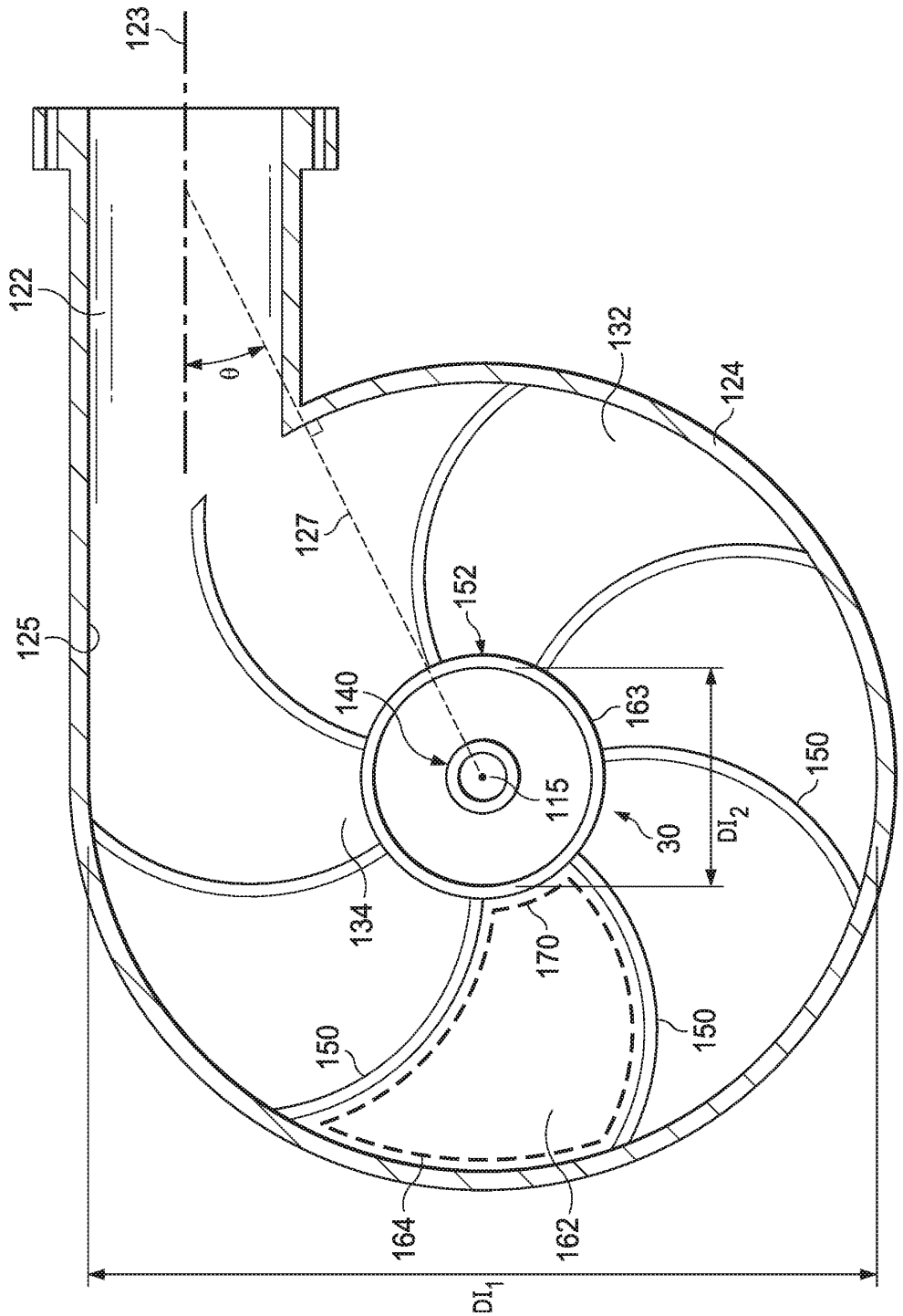
123
122
θ
132
124
127
152
125
140
163
150
115
30
DI2
134
170
150
150
164
162
DI1

Fig. 3A

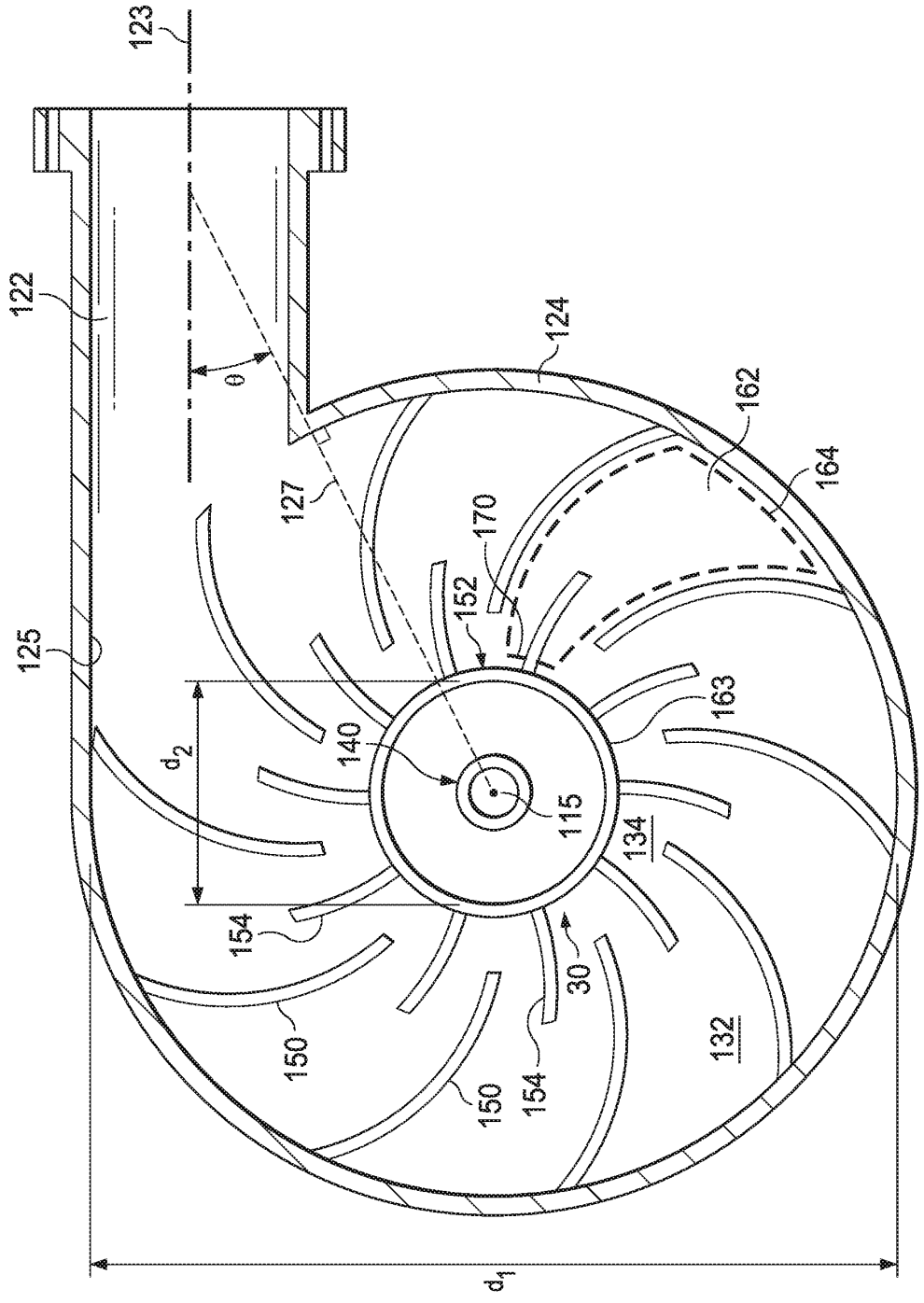
123
122
θ
124
162
164
127
170
152
125
163
140
d_2
115
134
154
30
150
154
150
132
d_1

Fig. 3B

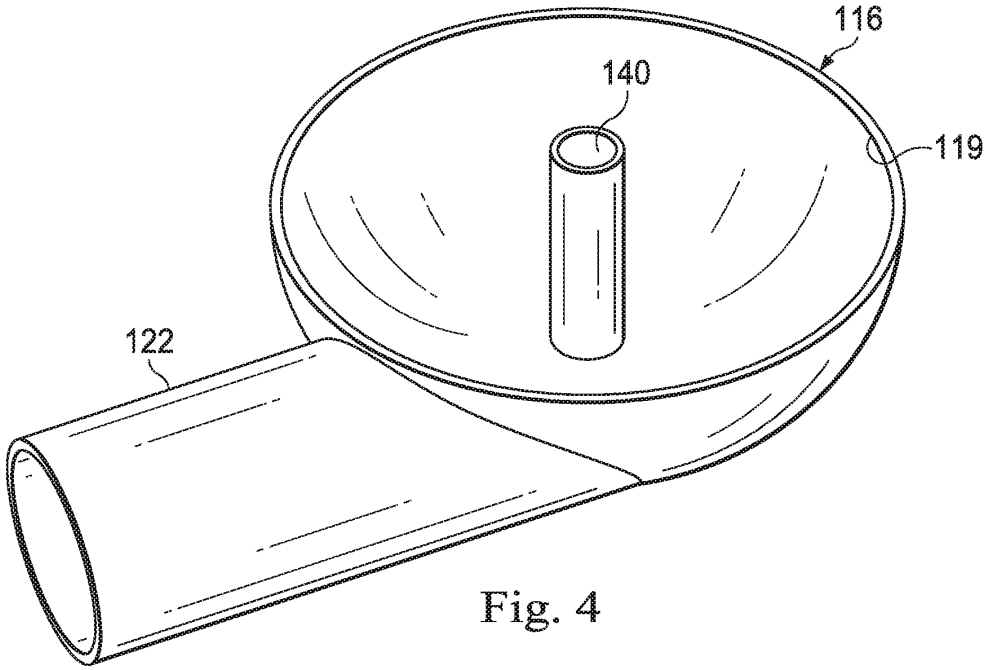
116
140
119
122

Fig. 4

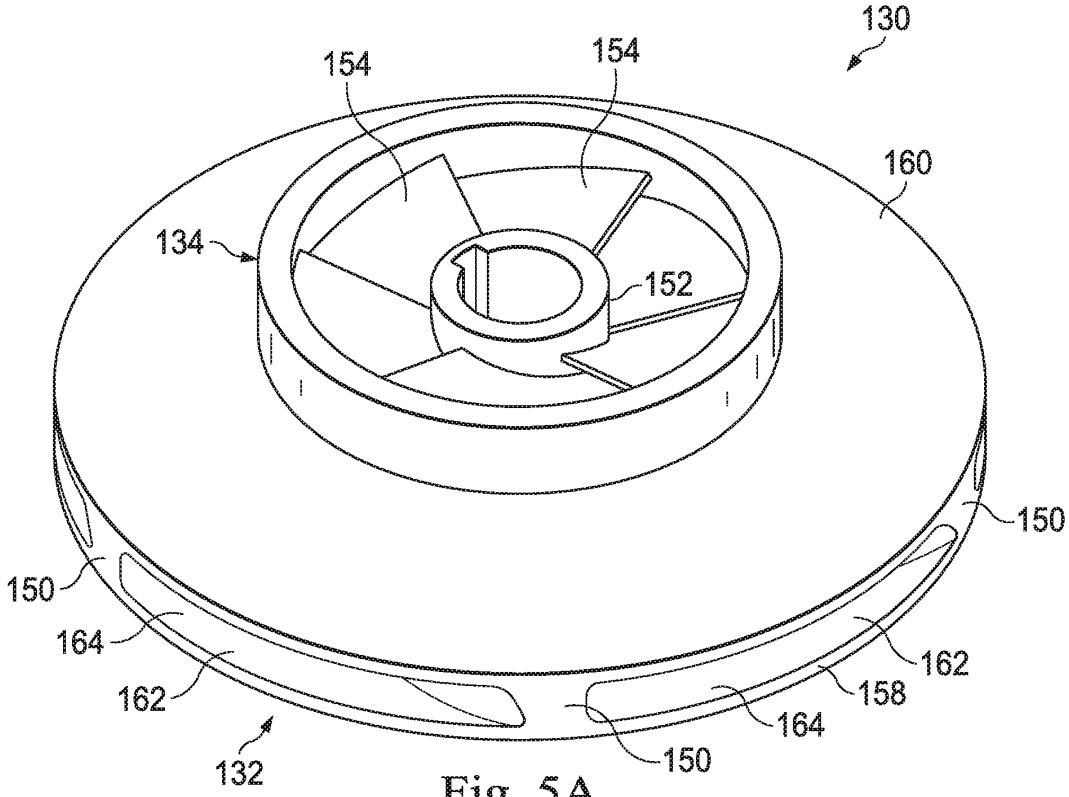
130
154
154
160
134
152
150
150
164
162
162
158
164
150
132

Fig. 5A

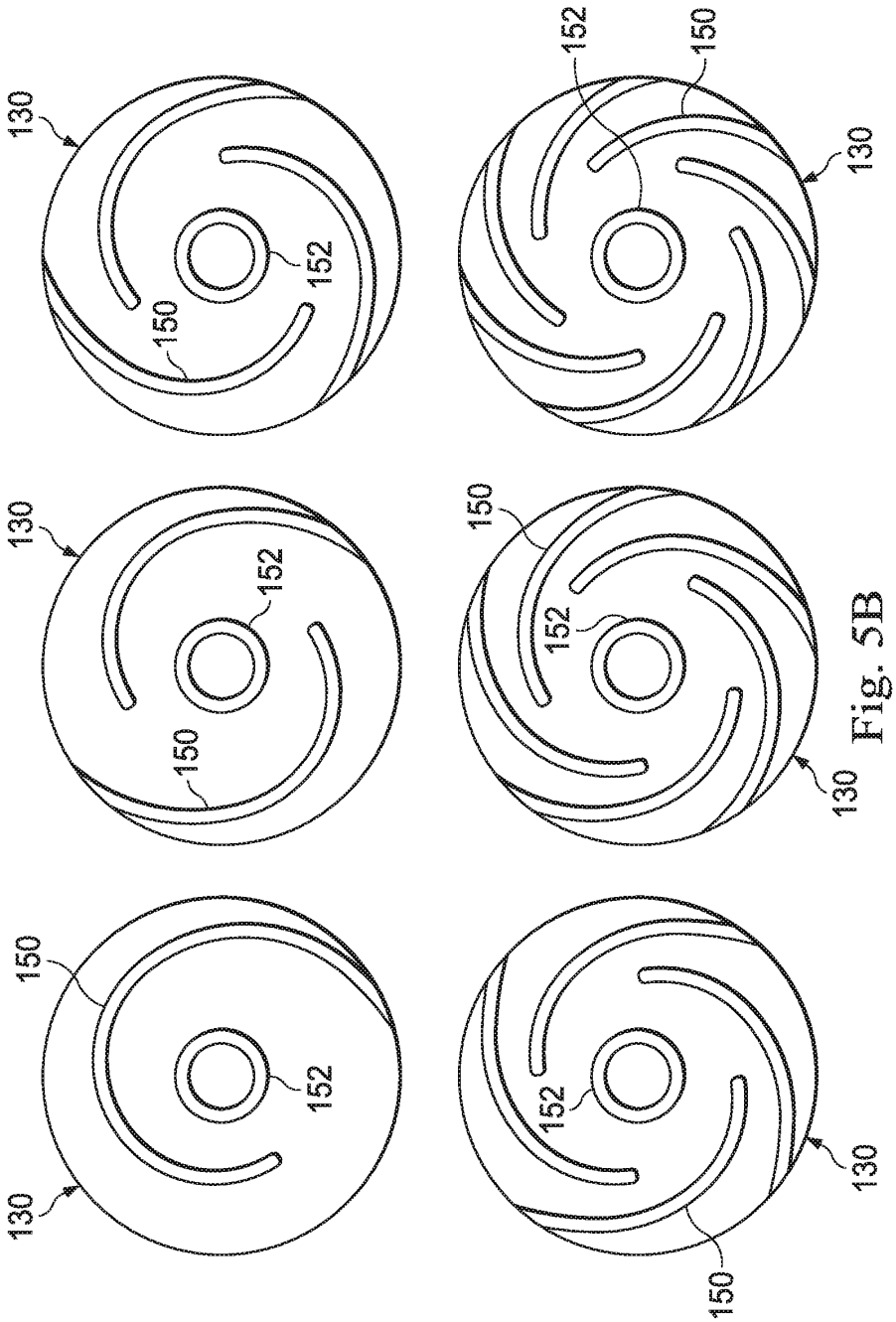
130
152
150
130
152
150
130
152
150
150
152
130
150
152
130
152
150
130

Fig. 5B

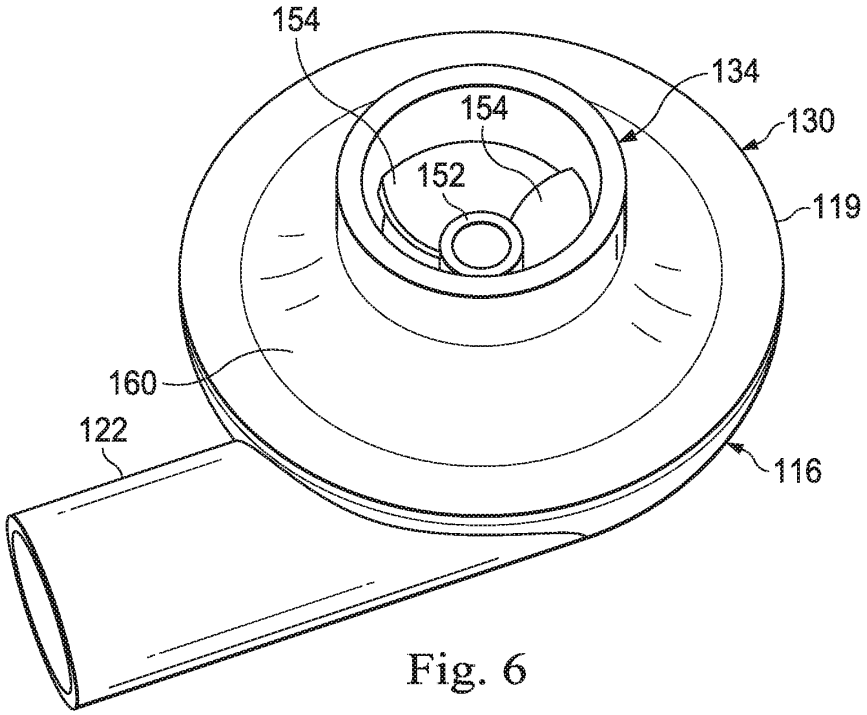

Fig. 6

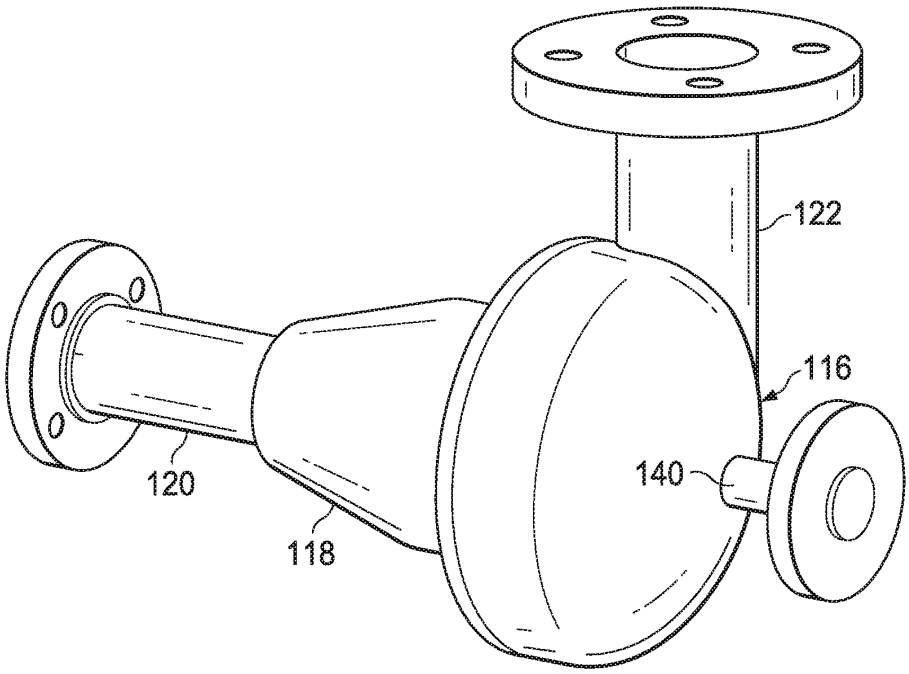

Fig. 7

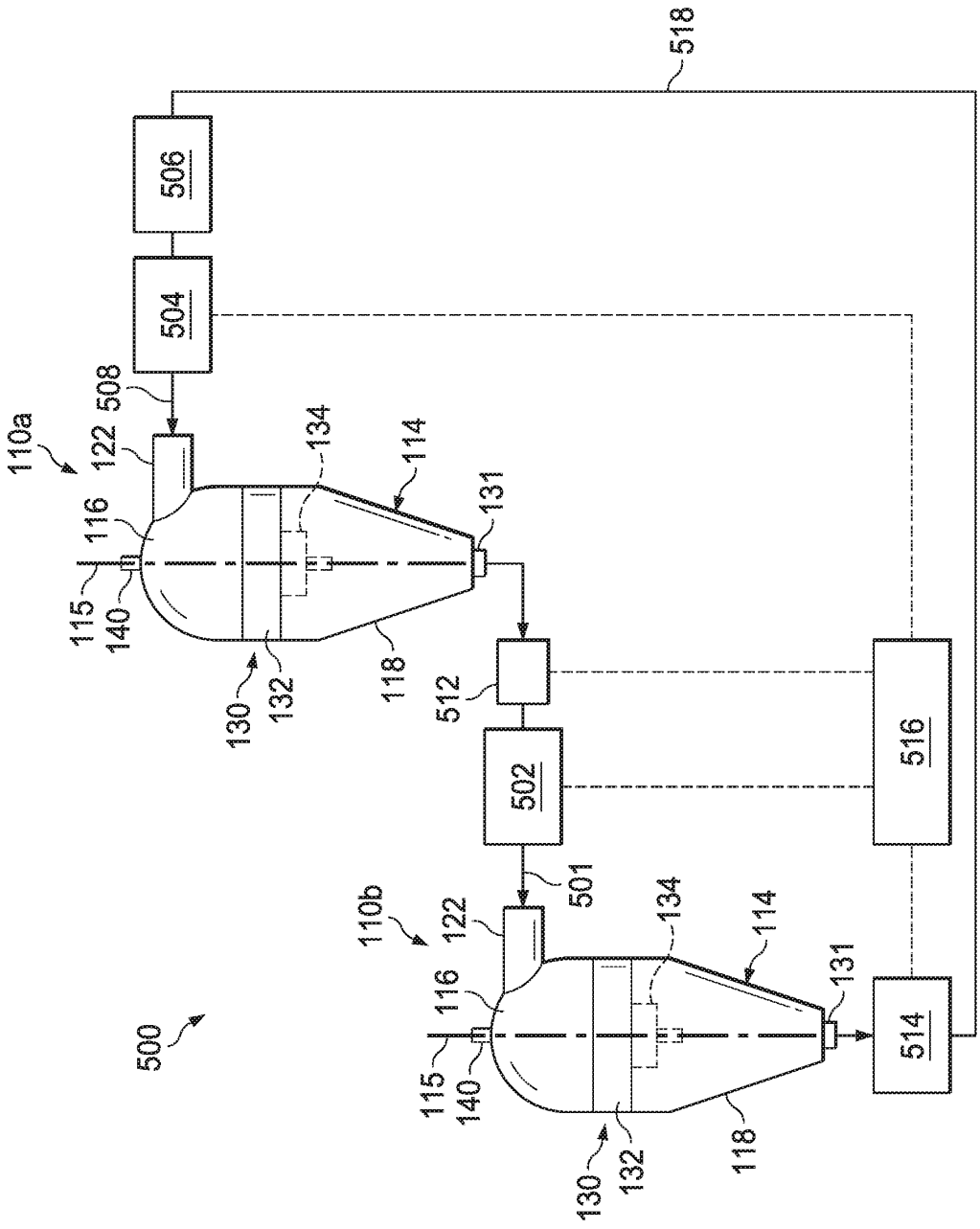
518
506
504
508
110a
122
134
114
116
131
115
140
130
132
118
512
502
516
501
110b
514
500

Fig. 8

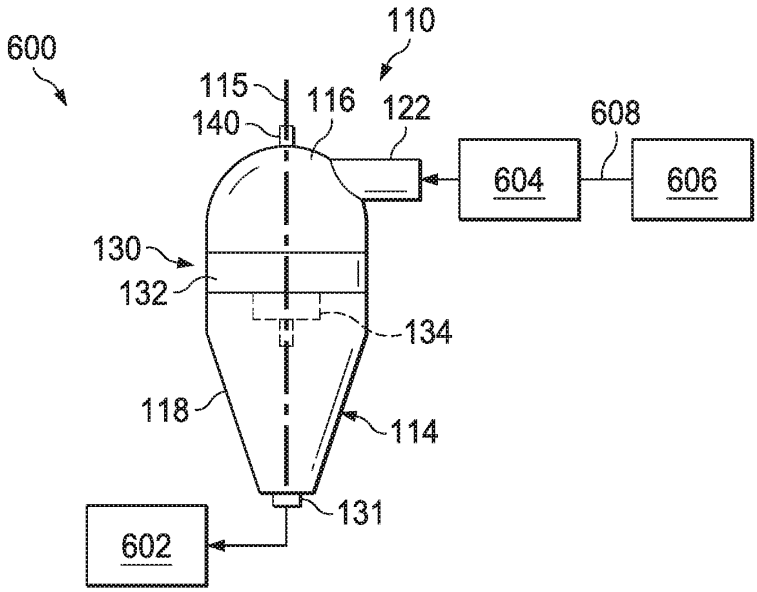
600
110
115
116
122
140
608
604
606
130
132
134
118
114
131
602

Fig. 9

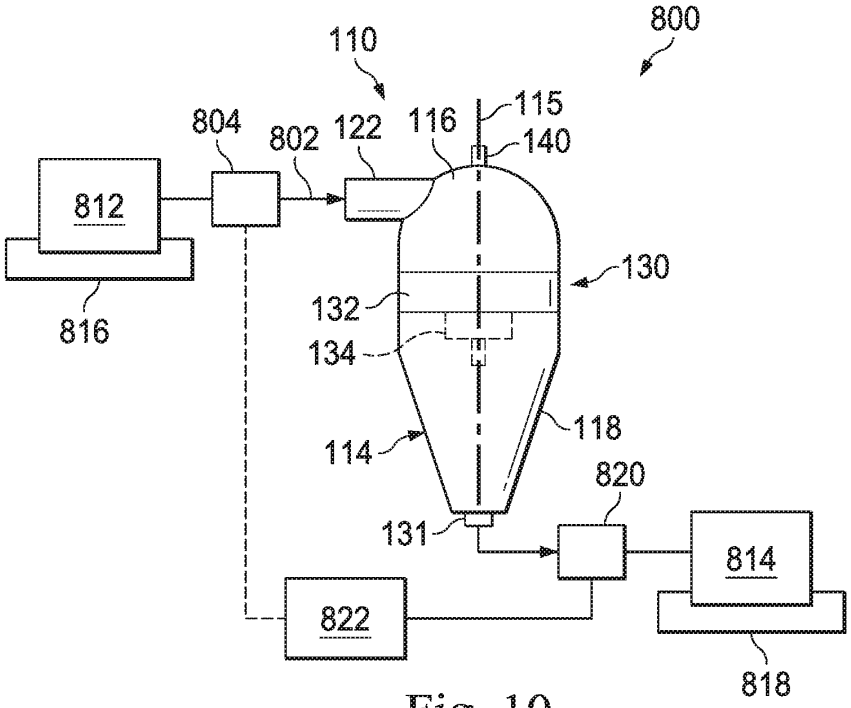
800
110
804
802
122
116
115
140
812
130
132
134
816
118
114
820
131
814
822
818

Fig. 10

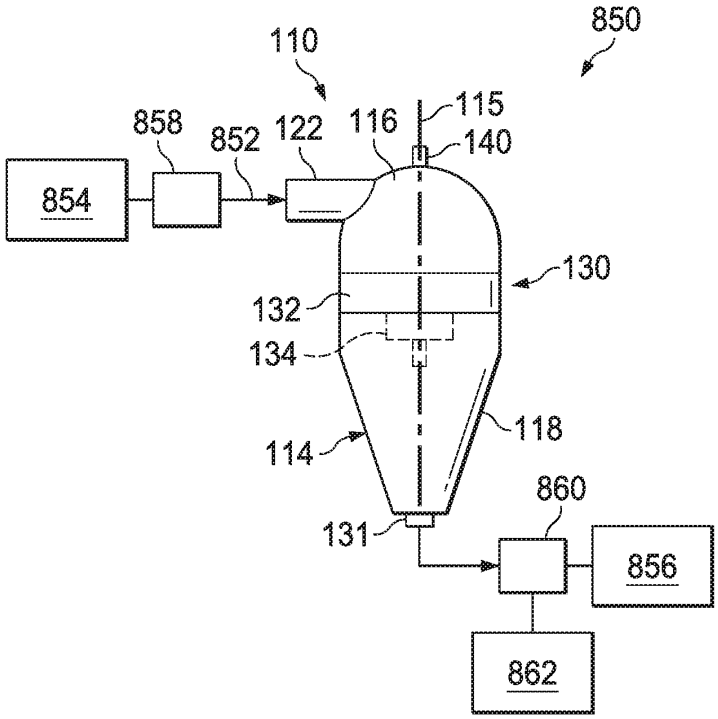
850
110
858
852
122
116
115
140
854
130
132
134
118
114
860
131
856
862

Fig. 11

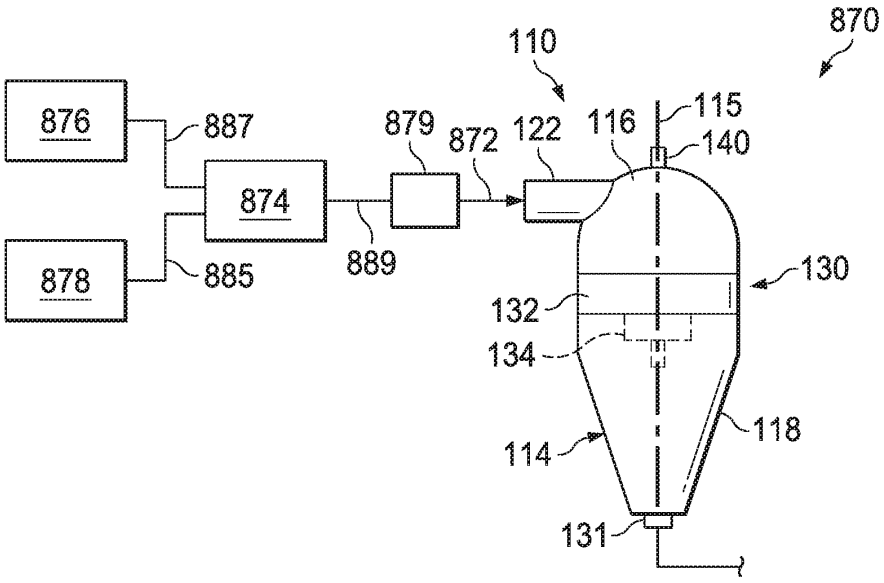
870
110
876
887
879
872
122
116
115
140
874
878
885
889
130
132
134
118
114
131

Fig. 12

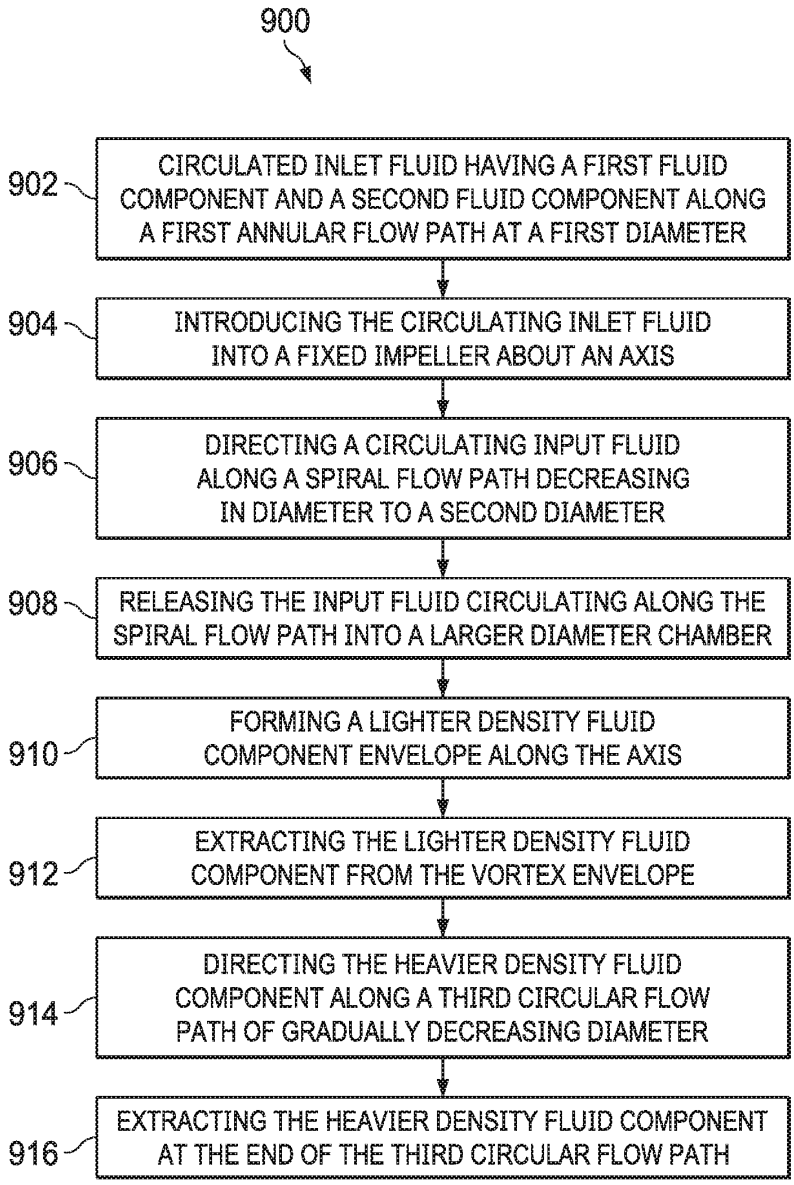
900
902
CIRCULATED INLET FLUID HAVING A FIRST FLUID COMPONENT AND A SECOND FLUID COMPONENT ALONG A FIRST ANNULAR FLOW PATH AT A FIRST DIAMETER
904
INTRODUCING THE CIRCULATING INLET FLUID INTO A FIXED IMPELLER ABOUT AN AXIS
906
DIRECTING A CIRCULATING INPUT FLUID ALONG A SPIRAL FLOW PATH DECREASING IN DIAMETER TO A SECOND DIAMETER
908
RELEASING THE INPUT FLUID CIRCULATING ALONG THE SPIRAL FLOW PATH INTO A LARGER DIAMETER CHAMBER
910
FORMING A LIGHTER DENSITY FLUID COMPONENT ENVELOPE ALONG THE AXIS
912
EXTRACTING THE LIGHTER DENSITY FLUID COMPONENT FROM THE VORTEX ENVELOPE
914
DIRECTING THE HEAVIER DENSITY FLUID COMPONENT ALONG A THIRD CIRCULAR FLOW PATH OF GRADUALLY DECREASING DIAMETER
916
EXTRACTING THE HEAVIER DENSITY FLUID COMPONENT AT THE END OF THE THIRD CIRCULAR FLOW PATH

Fig. 13