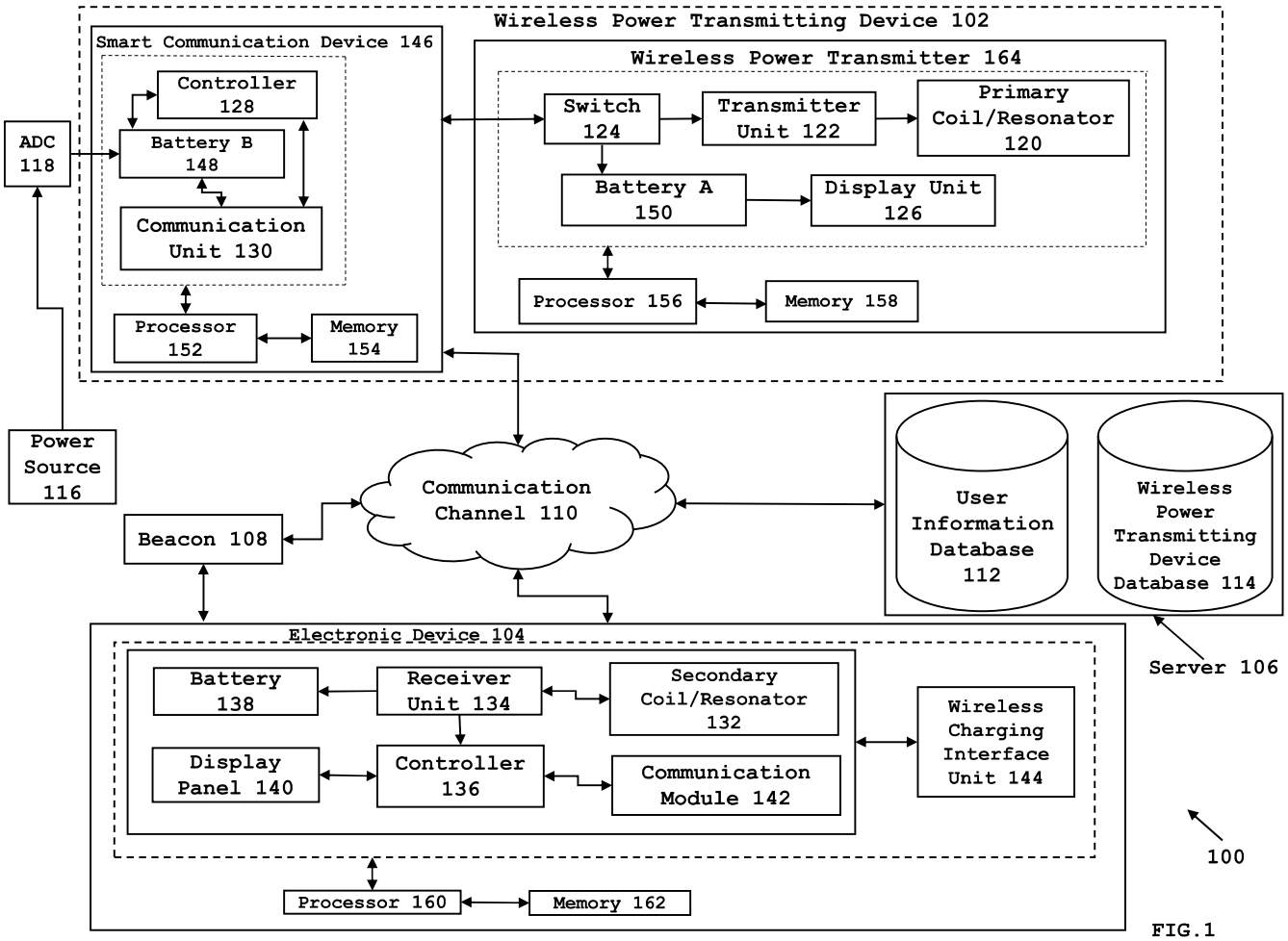
Wireless Power Transmitting Device 102
Smart Communication Device 146
Controller 128
Battery B 148
Communication Unit 130
Processor 152
Memory 154
ADC 118
Wireless Power Transmitter 164
Switch 124
Transmitter Unit 122
Primary Coil/Resonator 120
Battery A 150
Display Unit 126
Processor 156
Memory 158
Power Source 116
Communication Channel 110
Beacon 108
User Information Database 112
Wireless Power Transmitting Device Database 114
Server 106
Electronic Device 104
Battery 138
Receiver Unit 134
Secondary Coil/Resonator 132
Display Panel 140
Controller 136
Communication Module 142
Wireless Charging Interface Unit 144
Processor 160
Memory 162
100

FIG.1

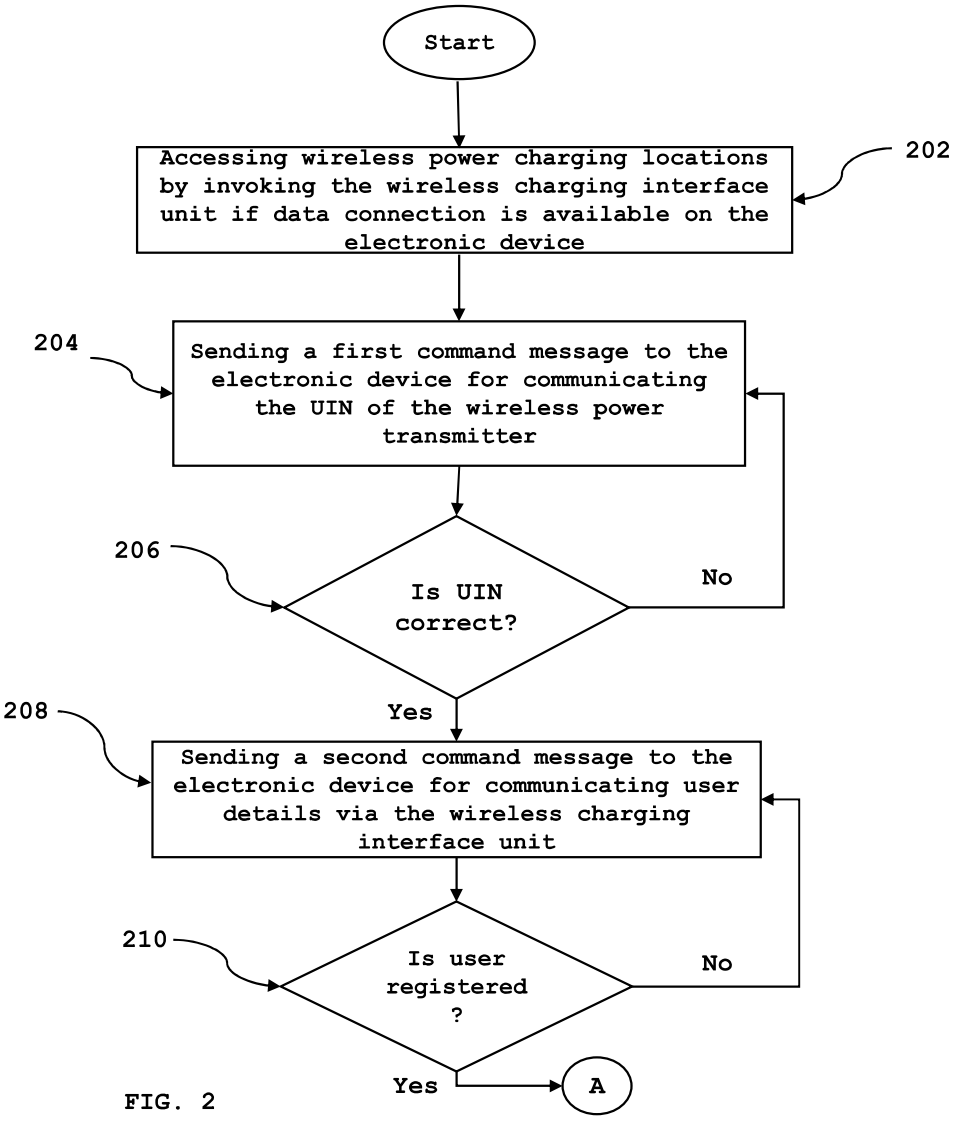
Start
Accessing wireless power charging locations by invoking the wireless charging interface unit if data connection is available on the electronic device
202
204
Sending a first command message to the electronic device for communicating the UIN of the wireless power transmitter
206
Is UIN correct?
No
Yes
208
Sending a second command message to the electronic device for communicating user details via the wireless charging interface unit
210
Is user registered ?
No
Yes
A

FIG. 2

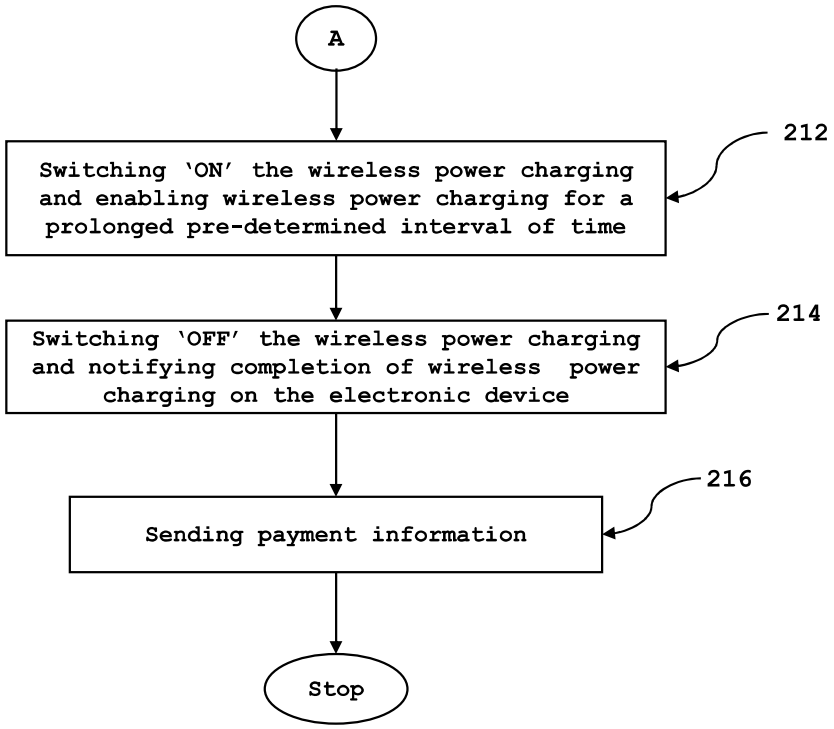
A
Switching 'ON' the wireless power charging and enabling wireless power charging for a prolonged pre-determined interval of time
212
Switching 'OFF' the wireless power charging and notifying completion of wireless power charging on the electronic device
214
Sending payment information
216
Stop

FIG. 2A

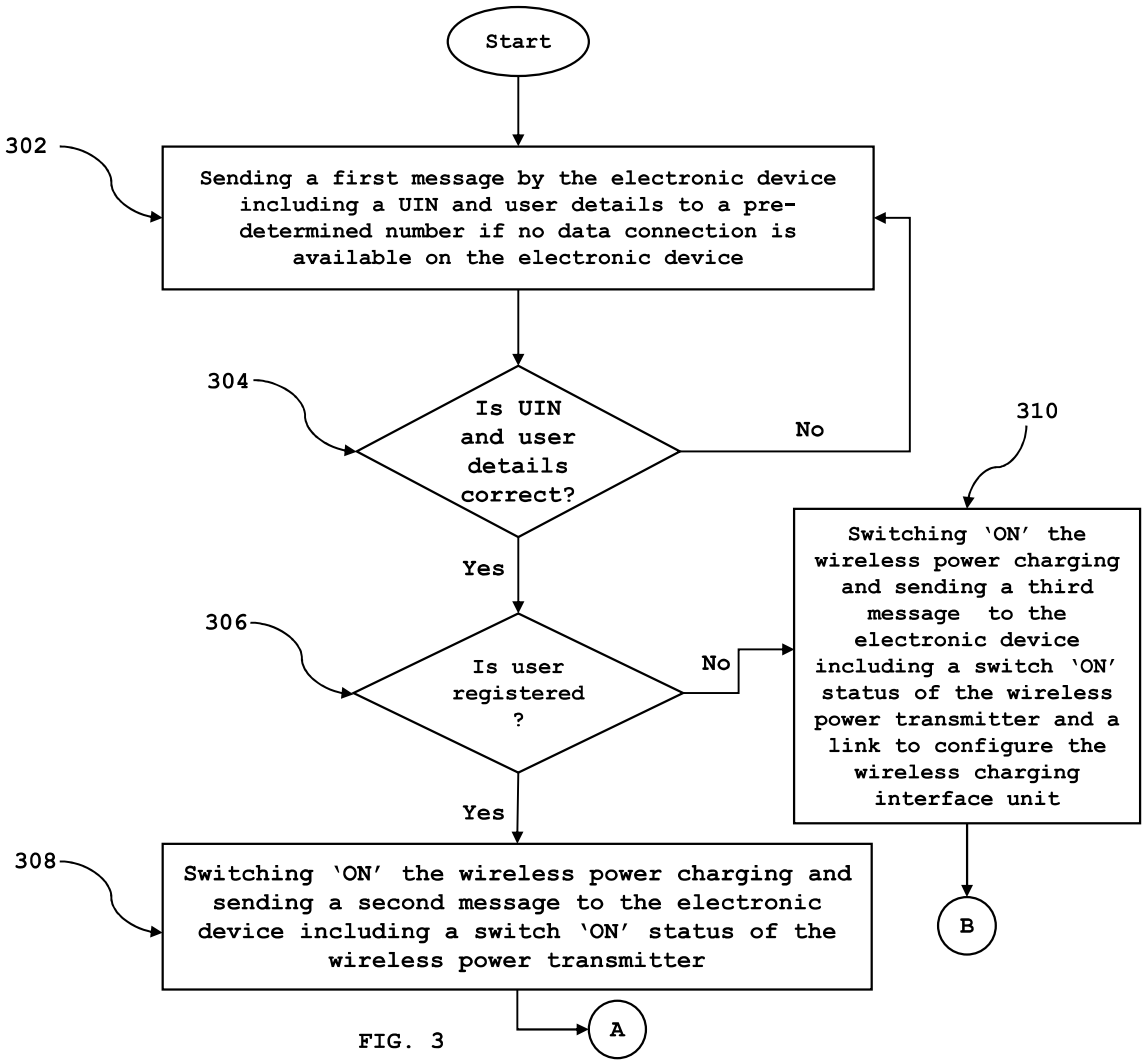
Start
302
Sending a first message by the electronic device including a UIN and user details to a pre-determined number if no data connection is available on the electronic device
304
Is UIN and user details correct?
No
Yes
310
Switching 'ON' the wireless power charging and sending a third message to the electronic device including a switch 'ON' status of the wireless power transmitter and a link to configure the wireless charging interface unit
306
Is user registered ?
No
Yes
308
Switching 'ON' the wireless power charging and sending a second message to the electronic device including a switch 'ON' status of the wireless power transmitter
A
B

FIG. 3

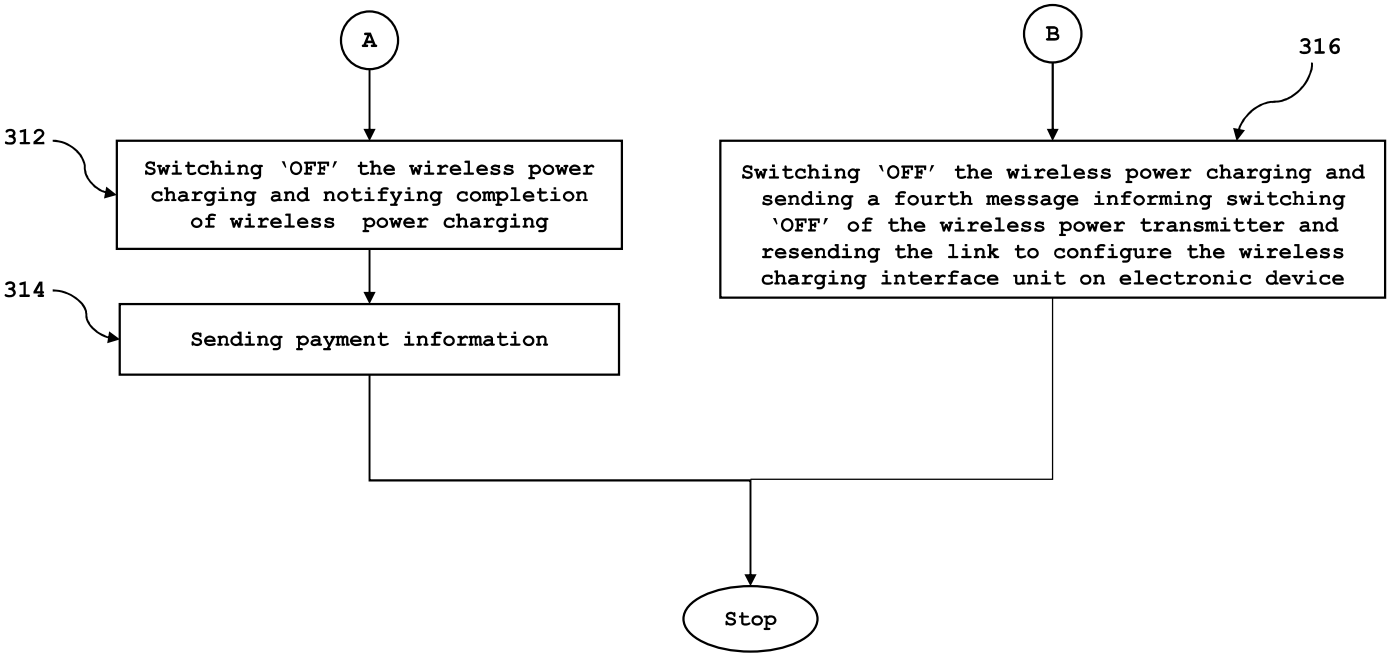
A
B
316
312
Switching 'OFF' the wireless power charging and notifying completion of wireless power charging
Switching 'OFF' the wireless power charging and sending a fourth message informing switching 'OFF' of the wireless power transmitter and resending the link to configure the wireless charging interface unit on electronic device
314
Sending payment information
Stop

FIG. 3A

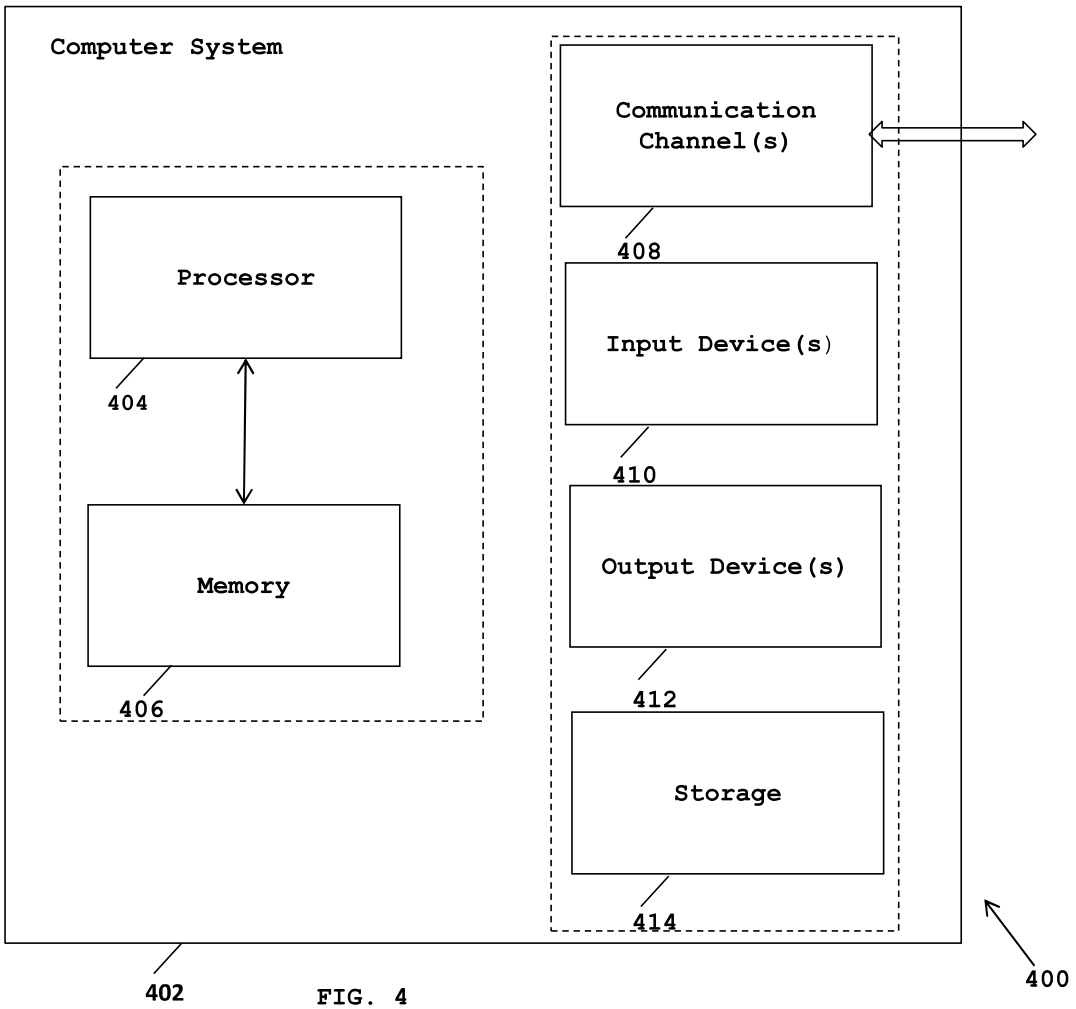
Computer System
Communication Channel(s)
Processor
404
Memory
406
408
Input Device(s)
410
Output Device(s)
412
Storage
414
402
400

FIG. 4