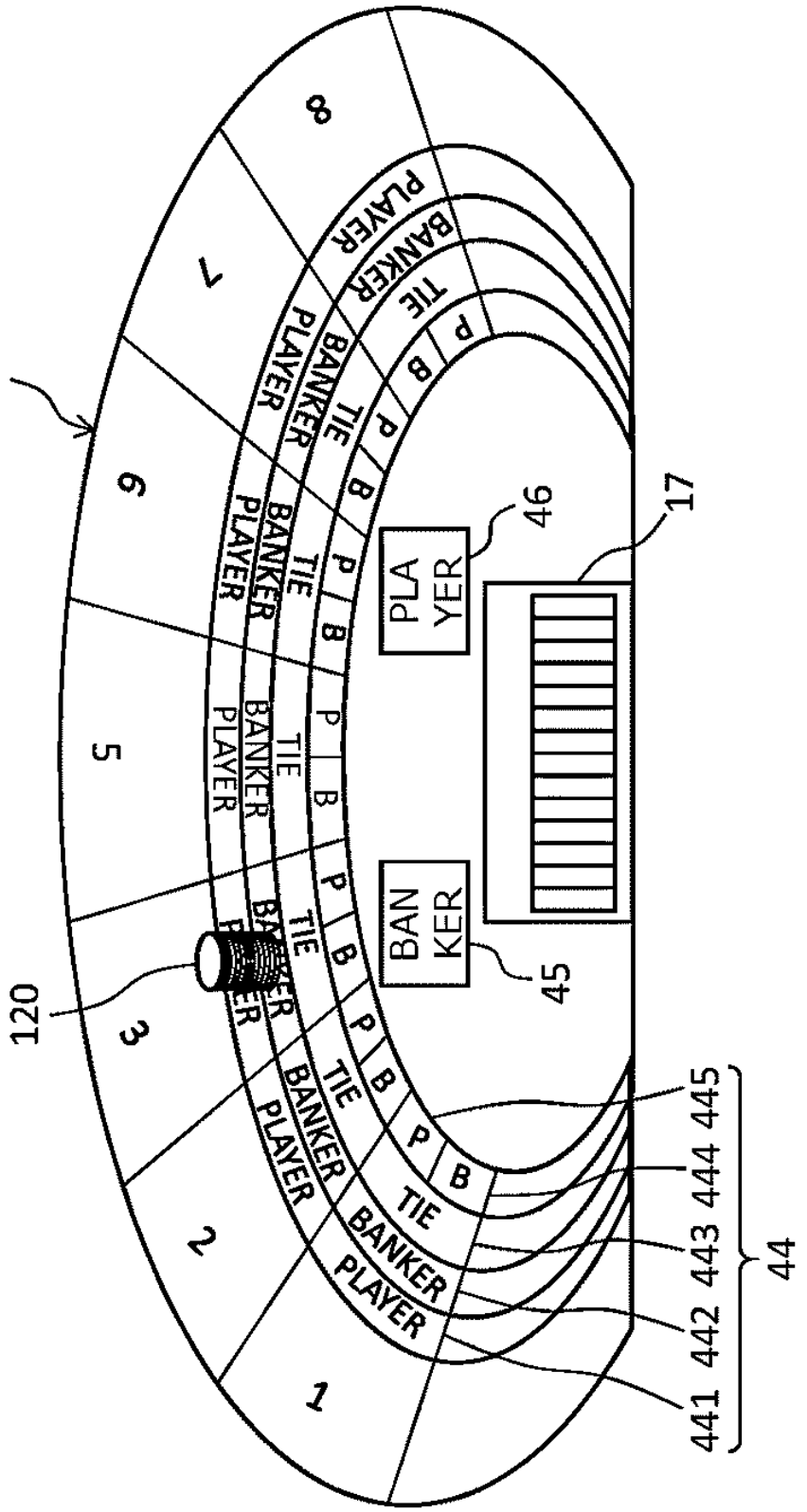
4
8
7
6
5
3
2
1
PLAYER
BANKER
TIE
P
B
PLA
YER
BAN
KER
46
45
17
120
441
442
443
444
445
44

Fig. 1

Fig. 2

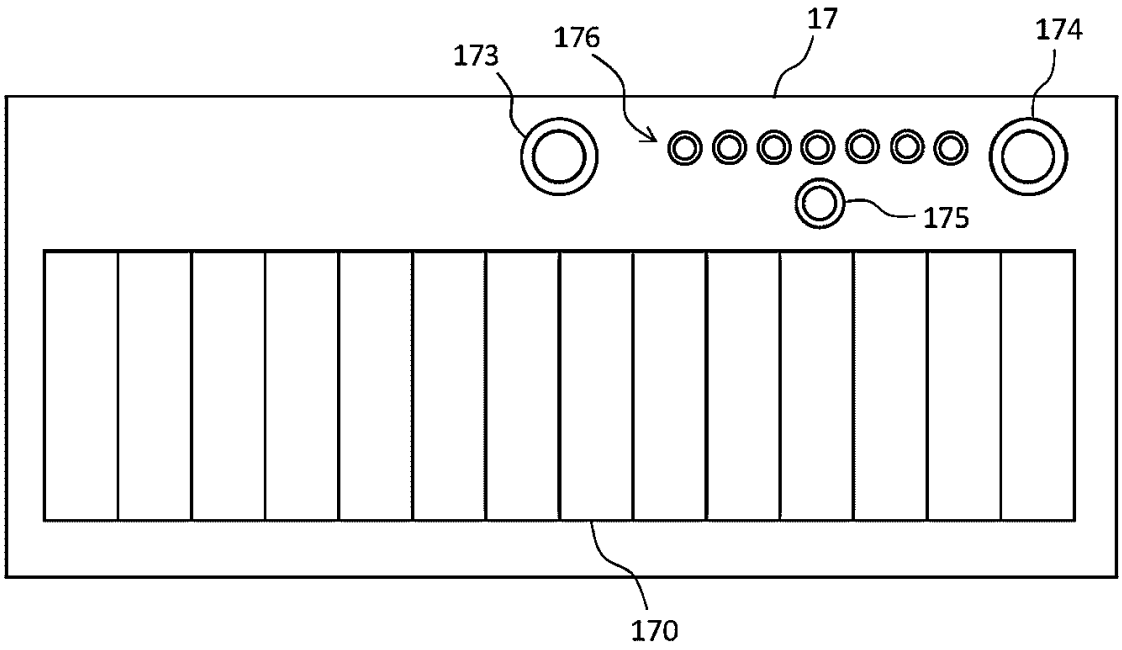

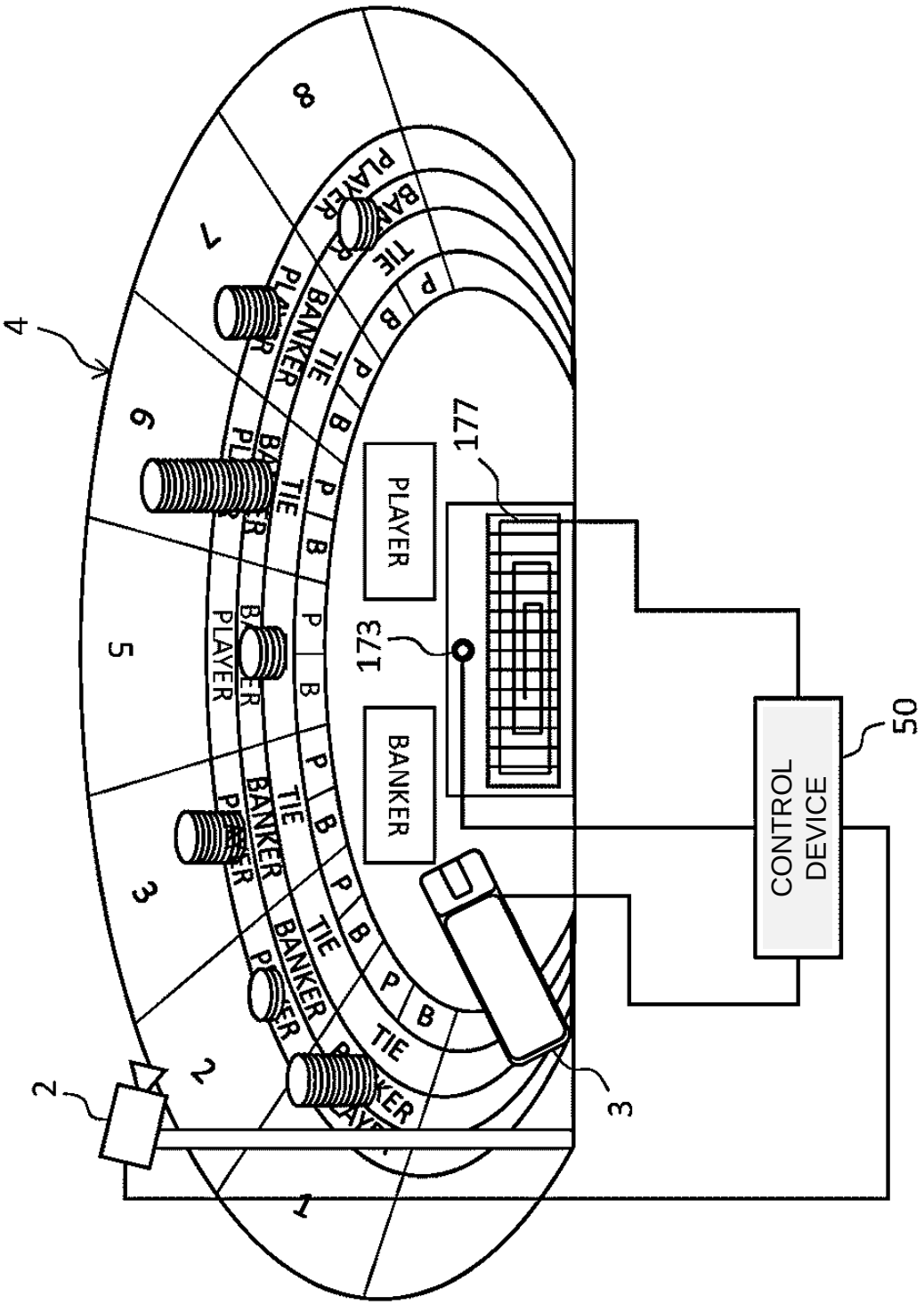

Fig. 3

Fig. 4

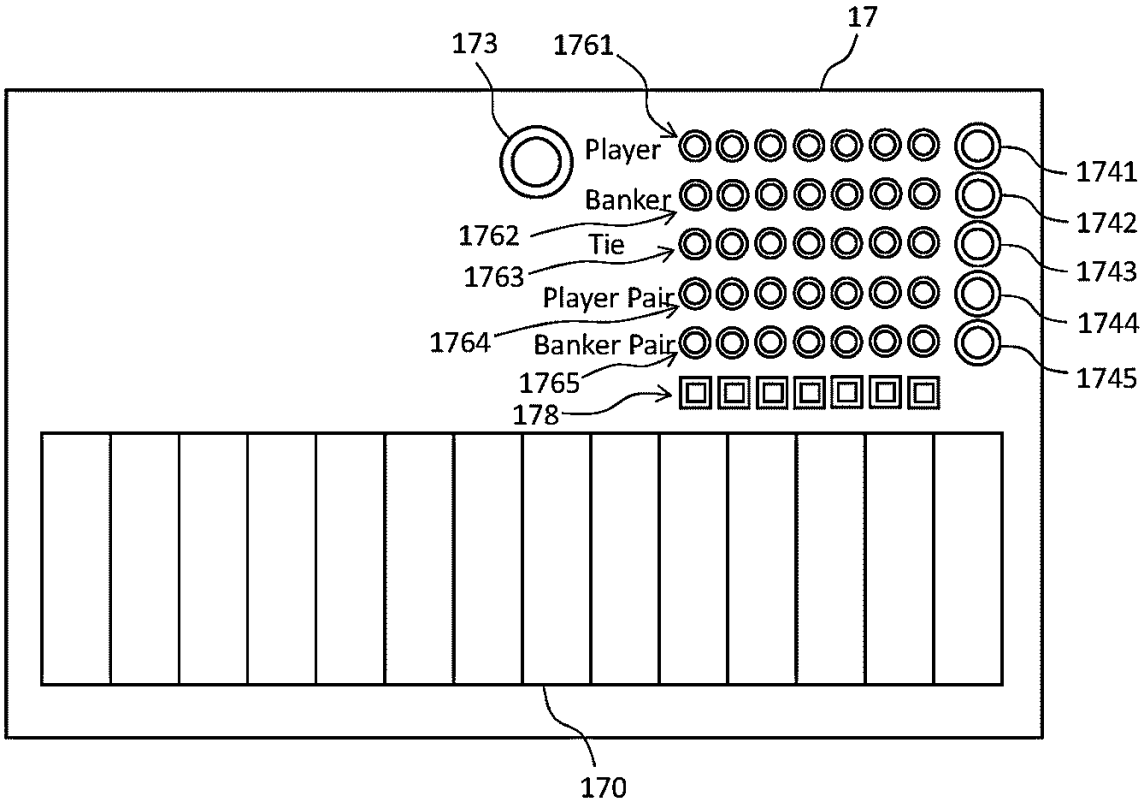
17
173
1761
Player
Banker
1762
Tie
1763
Player Pair
1764
Banker Pair
1765
178
1741
1742
1743
1744
1745
170

Fig. 5

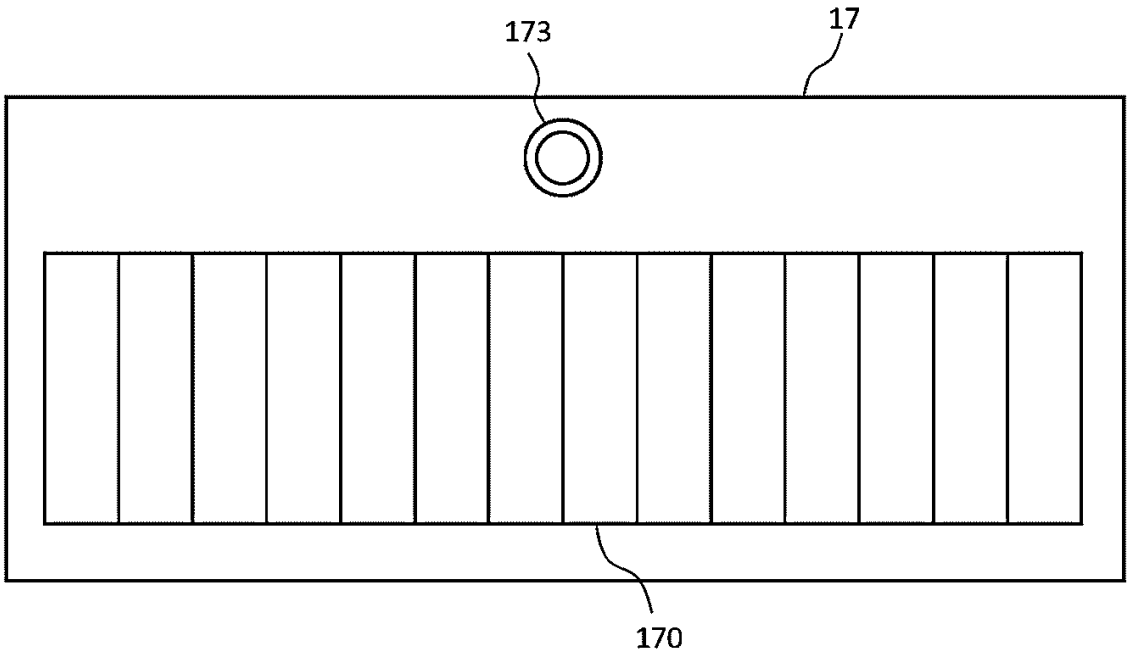

Fig. 6

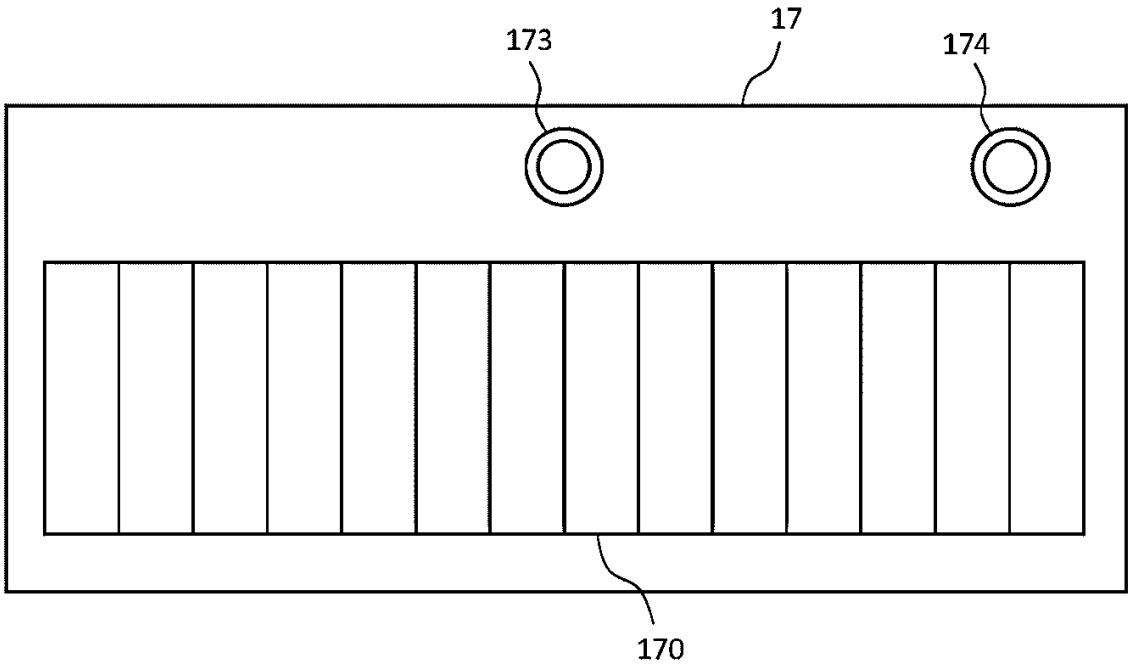

Fig. 7

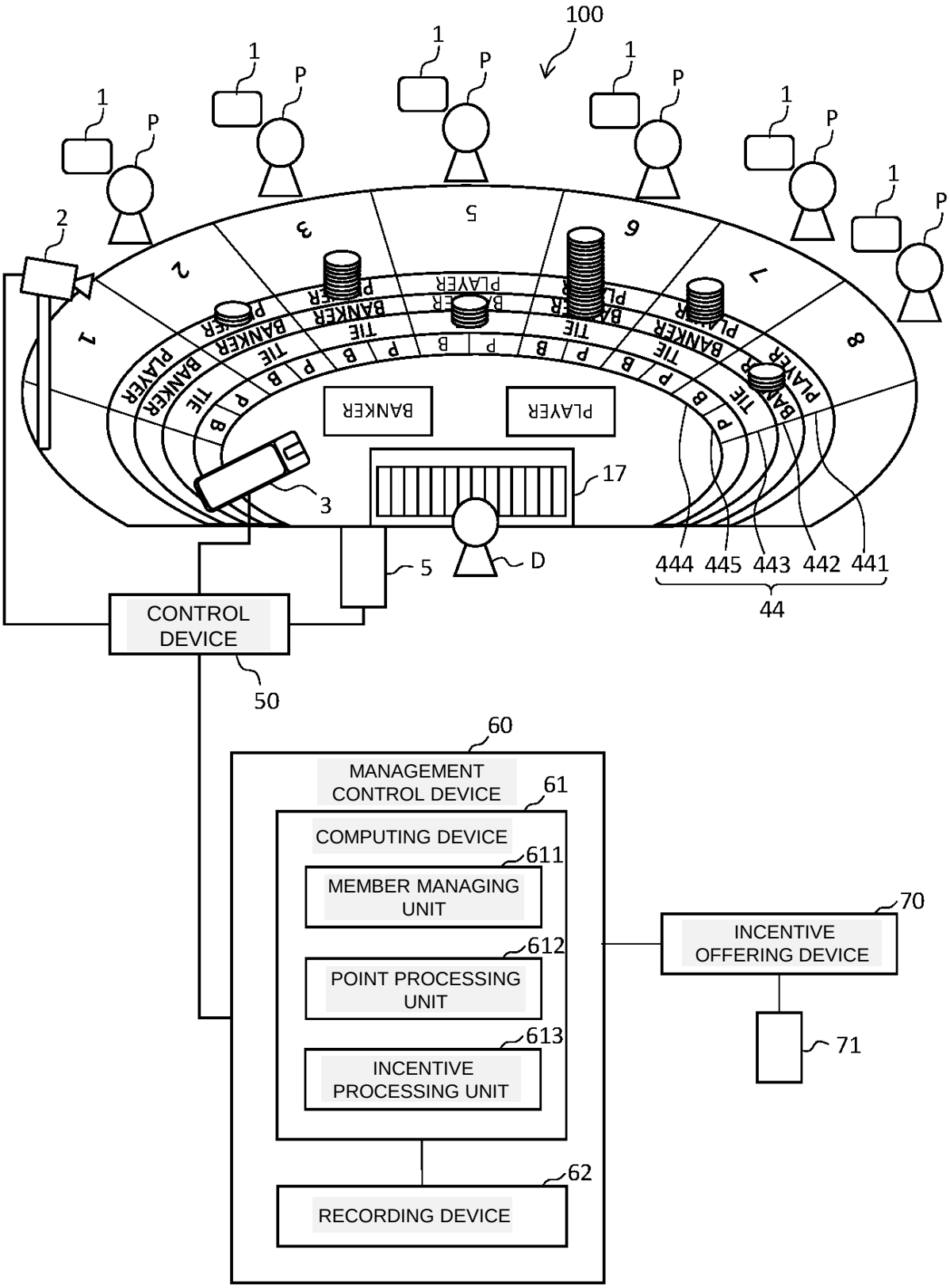
100
1
P
2
3
5
6
7
8
BANKER
PLAYER
TIE
B
P
17
3
5
D
444
445
443
442
441
44
CONTROL DEVICE
50
60
MANAGEMENT CONTROL DEVICE
61
COMPUTING DEVICE
611
MEMBER MANAGING UNIT
612
POINT PROCESSING UNIT
613
INCENTIVE PROCESSING UNIT
62
RECORDING DEVICE
70
INCENTIVE OFFERING DEVICE
71

Fig. 8

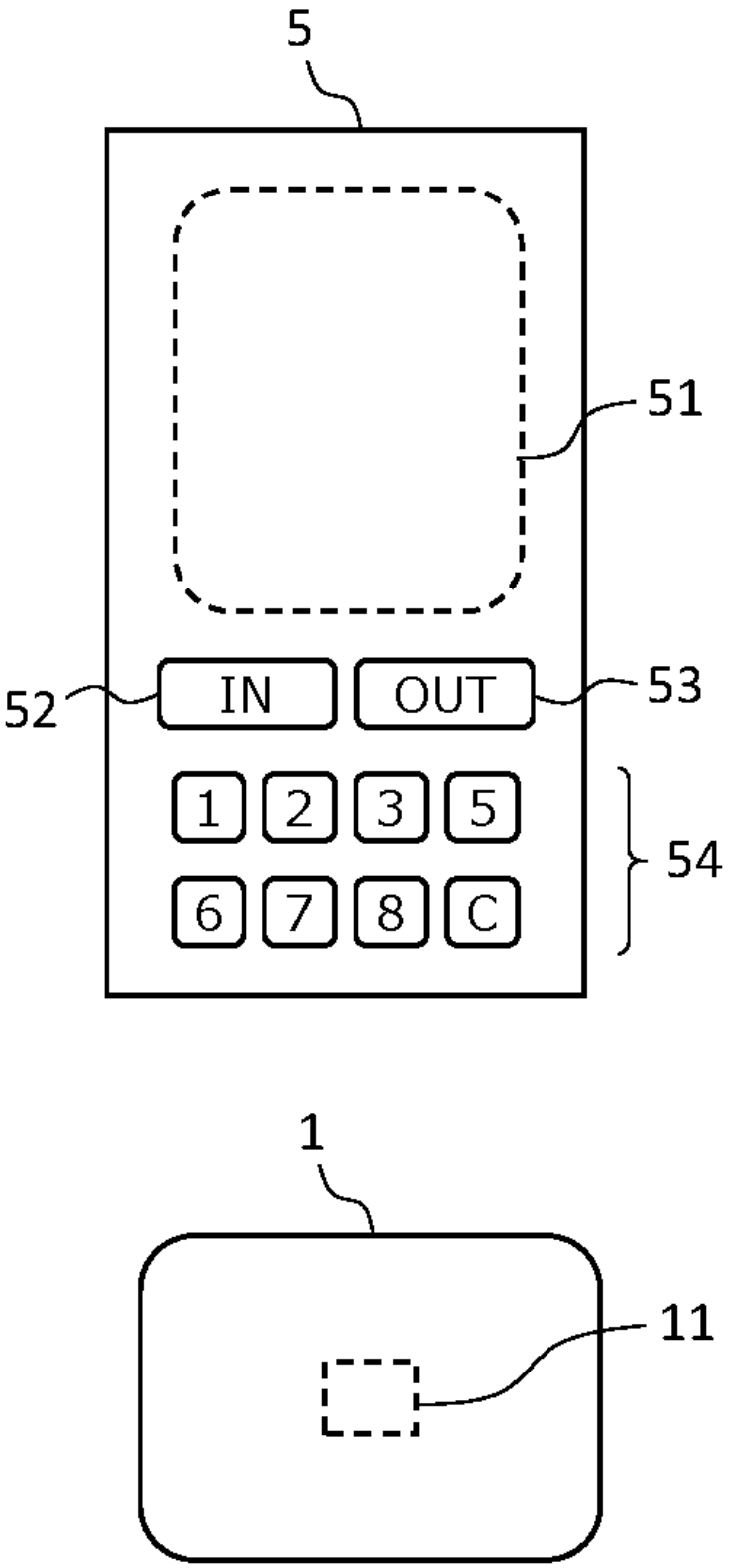

Fig. 9

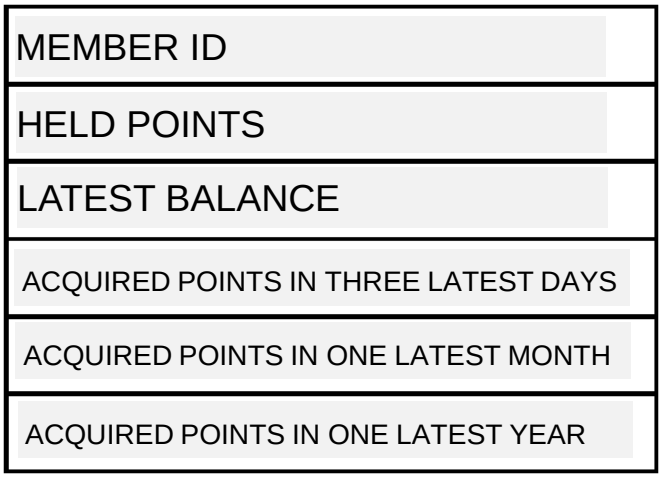
MEMBER ID
HELD POINTS
LATEST BALANCE
ACQUIRED POINTS IN THREE LATEST DAYS
ACQUIRED POINTS IN ONE LATEST MONTH
ACQUIRED POINTS IN ONE LATEST YEAR

Fig. 10

MEMBER INFORMATION
MEMBER ID
HELD POINTS
LATEST BALANCE
ACQUIRED POINTS IN THREE LATEST DAYS
ACQUIRED POINTS IN ONE LATEST MONTH
ACQUIRED POINTS IN ONE LATEST YEAR
PLAY RESULT (START TIME: END TIME: BET AMOUNT: BALANCE)
PLAY RESULT (START TIME: END TIME: BET AMOUNT: BALANCE)
PLAY RESULT (START TIME: END TIME: BET AMOUNT: BALANCE)
• • •

Fig. 11

NUMBER OF CONSUMPTION POINTS: INCENTIVE: OFFERING CONDITION
NUMBER OF CONSUMPTION POINTS: INCENTIVE: OFFERING CONDITION
NUMBER OF CONSUMPTION POINTS: INCENTIVE: OFFERING CONDITION
• • •

Fig. 12

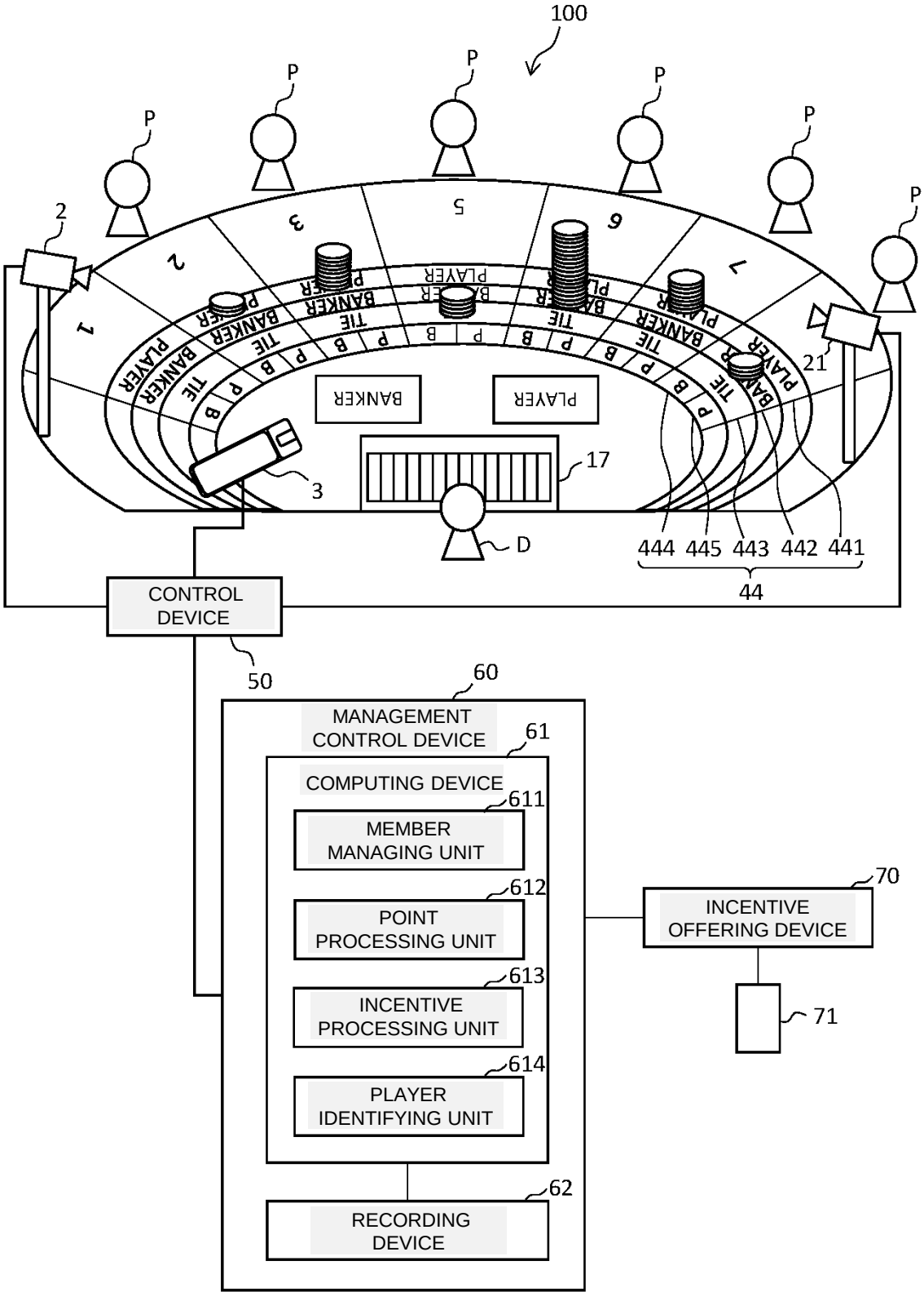
100
P
2
1
3
5
6
7
21
BANKER
PLAYER
TIE
B
P
17
3
D
444
445
443
442
441
44
CONTROL DEVICE
50
60
MANAGEMENT CONTROL DEVICE
61
COMPUTING DEVICE
611
MEMBER MANAGING UNIT
612
POINT PROCESSING UNIT
613
INCENTIVE PROCESSING UNIT
614
PLAYER IDENTIFYING UNIT
62
RECORDING DEVICE
70
INCENTIVE OFFERING DEVICE
71

Fig. 13

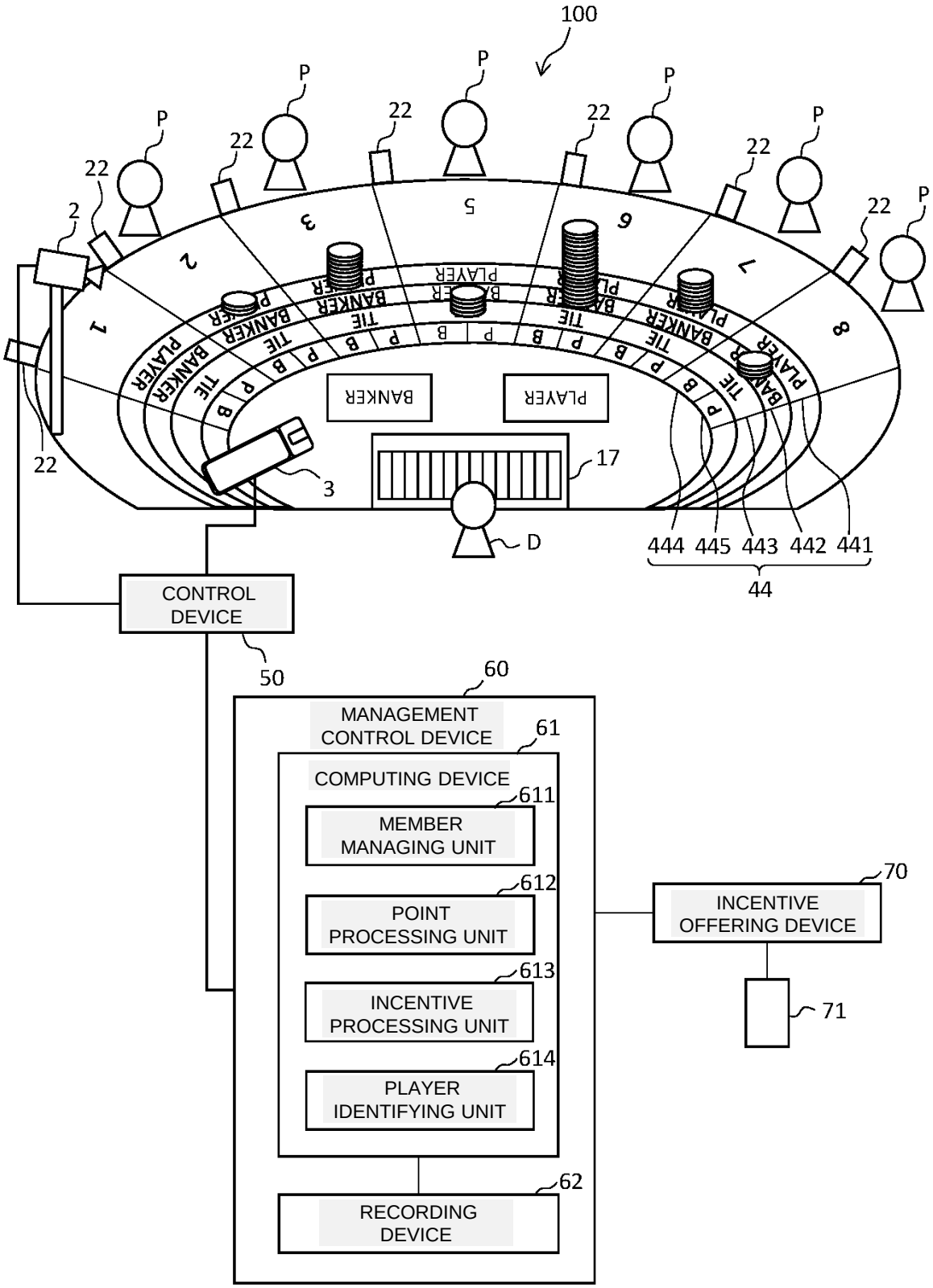
100
P
22
2
1
3
5
6
7
8
BANKER
PLAYER
TIE
P
B
17
3
D
444
445
443
442
441
44
CONTROL DEVICE
50
60
MANAGEMENT CONTROL DEVICE
61
COMPUTING DEVICE
611
MEMBER MANAGING UNIT
612
POINT PROCESSING UNIT
613
INCENTIVE PROCESSING UNIT
614
PLAYER IDENTIFYING UNIT
62
RECORDING DEVICE
70
INCENTIVE OFFERING DEVICE
71