(12) INTERNATIONAL APPLICATION PUBLISHED UNDER THE PATENT COOPERATION TREATY (PCT)

(19) World Intellectual Property Organization
International Bureau

(43) International Publication Date
27 November 2014 (27.11.2014)

WIPO | PCT

(10) International Publication Number
WO 2014/190357 A1

(51) International Patent Classification:
B01L 3/00 (2006.01)

(21) International Application Number:
PCT/US2014/039623

(22) International Filing Date:
27 May 2014 (27.05.2014)

(25) Filing Language: English

(26) Publication Language: English

(30) Priority Data:
61/827,477 24 May 2013 (24.05.2013) US

(71) Applicant: **LIFE TECHNOLOGIES CORPORATION** [US/US]; c/o IP Docketing, 5791 Van Allen Way, Carlsbad, California 92008 (US).

(72) Inventors: **PALLAS, Michael**; 408 Oak Avenue, San Bruno, California 94066 (US). **FOSTER, Evan**; 852 N. Idaho Street, San Mateo, California 94401 (US). **FONSECA, Jorge**; 1717 Woodland Avenue, Apt. 215, East Palo Alto, California 94303 (US). **NURSE, James**; 4460 Entrada Drive, Pleasanton, California 94566 (US). **STRAUB, Theodore**; 2867 Hillside Drive, Burlingame, California 94010 (US).

(81) Designated States *(unless otherwise indicated, for every kind of national protection available)*: AE, AG, AL, AM, AO, AT, AU, AZ, BA, BB, BG, BH, BN, BR, BW, BY, BZ, CA, CH, CL, CN, CO, CR, CU, CZ, DE, DK, DM, DO, DZ, EC, EE, EG, ES, FI, GB, GD, GE, GH, GM, GT, HN, HR, HU, ID, IL, IN, IR, IS, JP, KE, KG, KN, KP, KR, KZ, LA, LC, LK, LR, LS, LT, LU, LY, MA, MD, ME, MG, MK, MN, MW, MX, MY, MZ, NA, NG, NI, NO, NZ, OM, PA, PE, PG, PH, PL, PT, QA, RO, RS, RU, RW, SA, SC, SD, SE, SG, SK, SL, SM, ST, SV, SY, TH, TJ, TM, TN, TR, TT, TZ, UA, UG, US, UZ, VC, VN, ZA, ZM, ZW.

(84) Designated States *(unless otherwise indicated, for every kind of regional protection available)*: ARIPO (BW, GH, GM, KE, LR, LS, MW, MZ, NA, RW, SD, SL, SZ, TZ, UG, ZM, ZW), Eurasian (AM, AZ, BY, KG, KZ, RU, TJ, TM), European (AL, AT, BE, BG, CH, CY, CZ, DE, DK, EE, ES, FI, FR, GB, GR, HR, HU, IE, IS, IT, LT, LU, LV, MC, MK, MT, NL, NO, PL, PT, RO, RS, SE, SI, SK, SM, TR), OAPI (BF, BJ, CF, CG, CI, CM, GA, GN, GQ, GW, KM, ML, MR, NE, SN, TD, TG).

Declarations under Rule 4.17:

— *of inventorship (Rule 4.17(iv))*

Published:

— *with international search report (Art. 21(3))*

— *before the expiration of the time limit for amending the claims and to be republished in the event of receipt of amendments (Rule 48.2(h))*

(54) **Title**: CASE AND CASE HOLDER FOR BIOLOGICAL SAMPLES AND CORRESPONDING METHOD OF USE

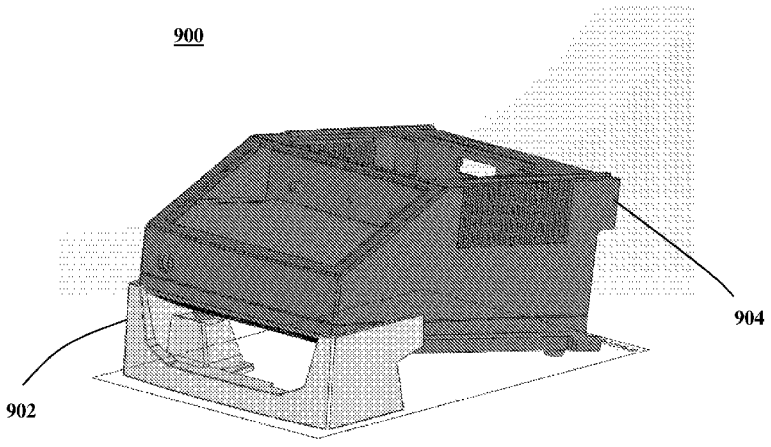

FIG. 31

(57) **Abstract**: A system for processing a plurality of biological samples contains a support and a temperature controller. The support is configured to hold a case that includes an inner chamber and a substrate located within the inner chamber, the substrate containing a plurality of isolated reaction sites containing one or more biological samples. The temperature controller is configured to maintain or control a temperature of at least one of the support, the case, or the one or more biological samples during an assay or reaction on the one or more biological samples. The support is also configured to maintain at least one of the surfaces of substrate at a positive angle relative to a horizontal plane during the assay or reaction.

WO 2014/190357 A1