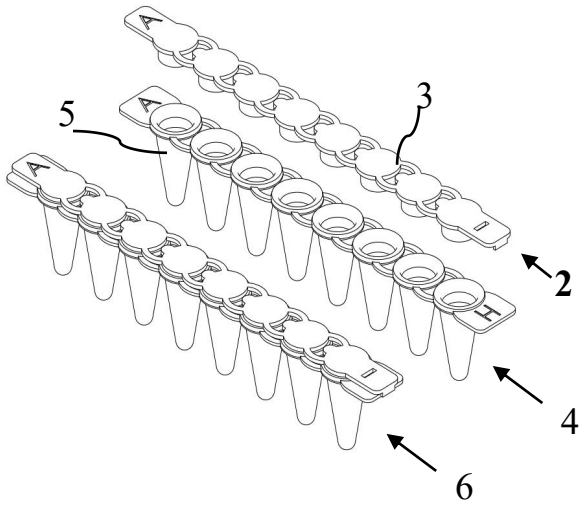

FIG 1(a)

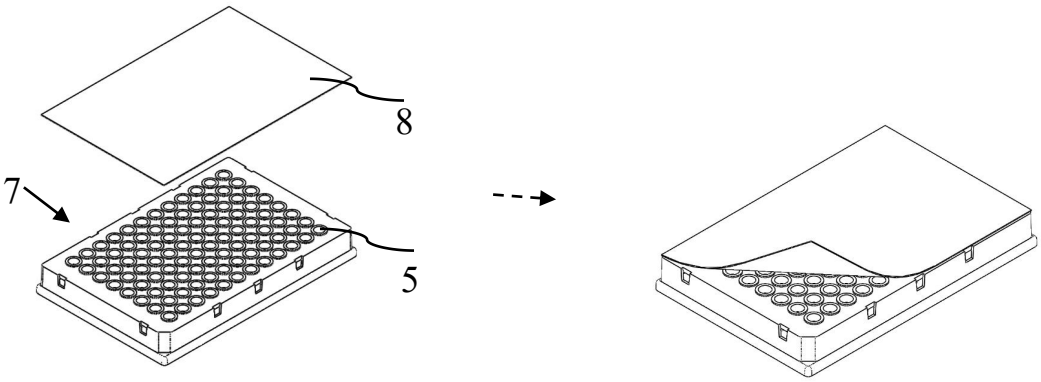

FIG 1(b)

FIG 1(c)

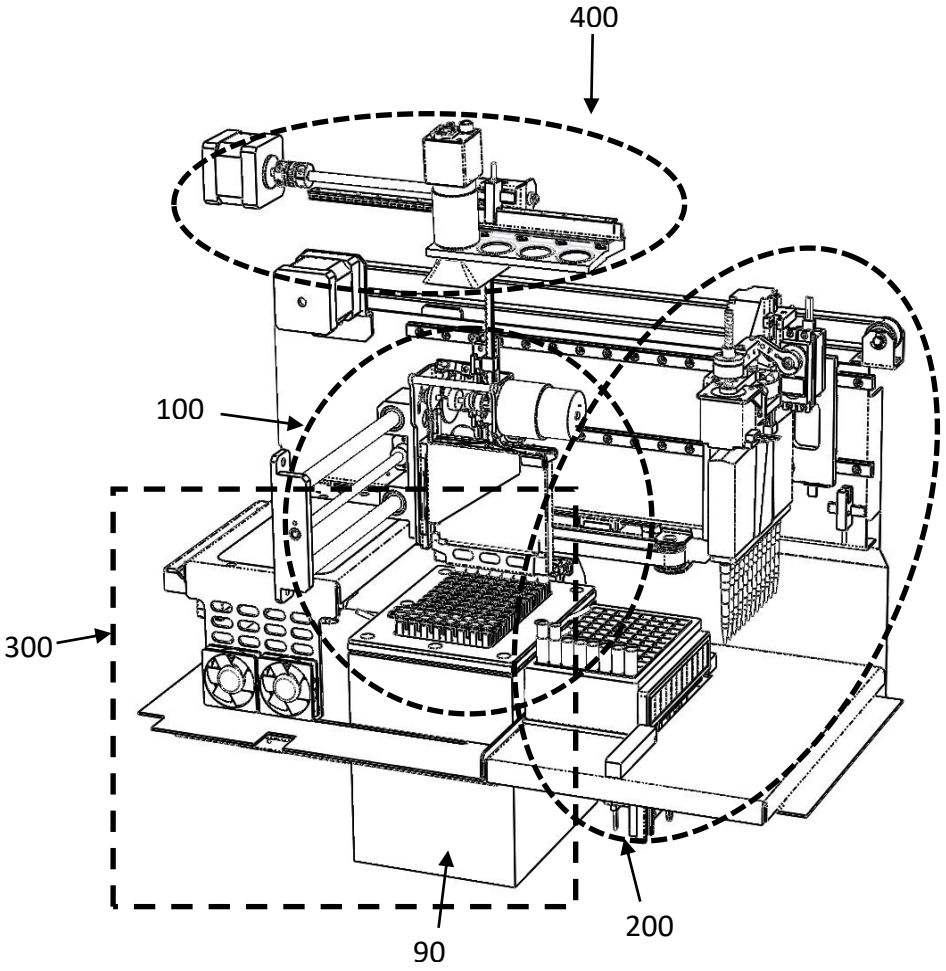

FIG 2

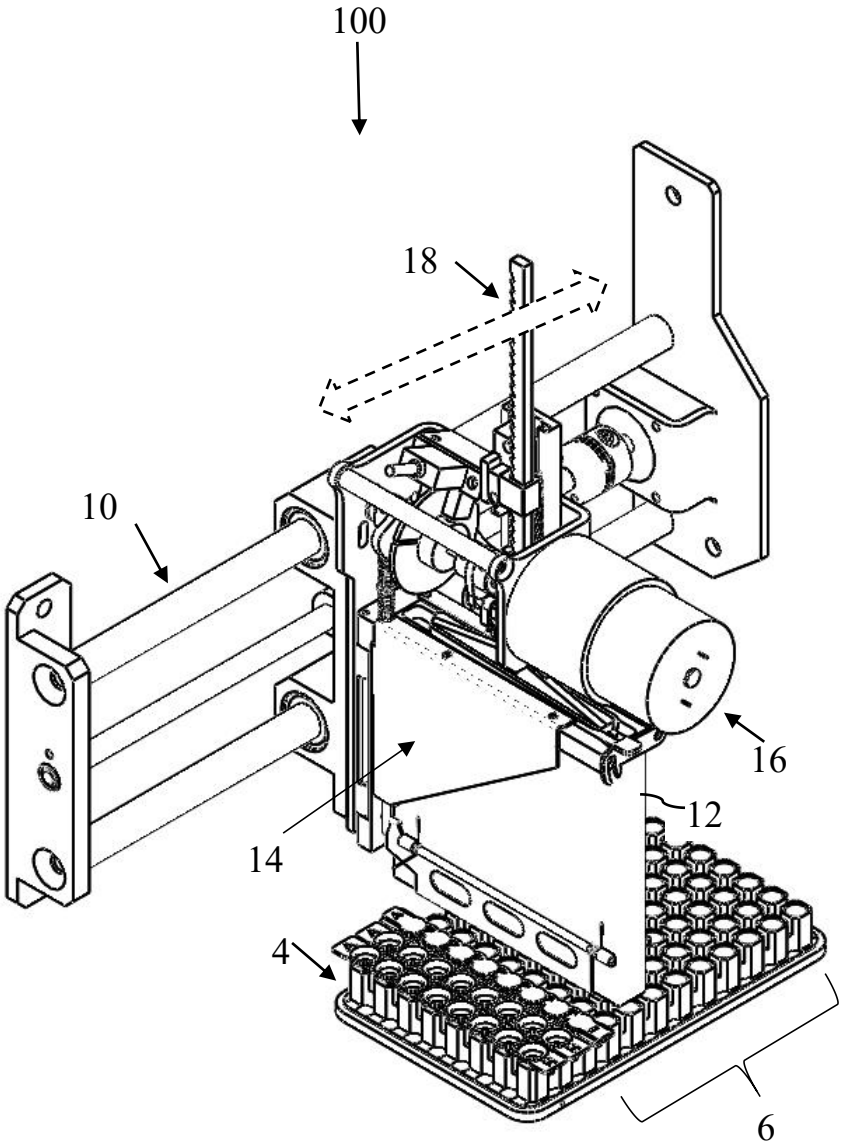

FIG 3(a)

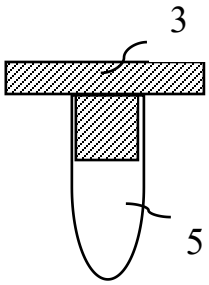

FIG 3(b)

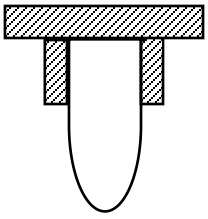

FIG 3(c)

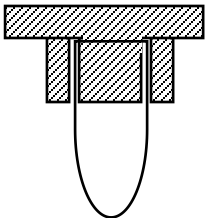

FIG 3(d)

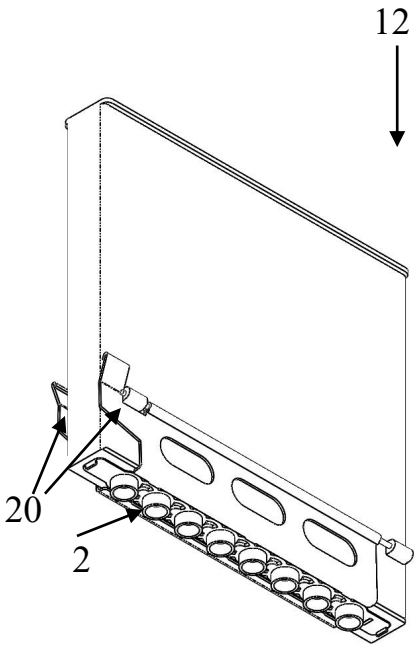

FIG 4

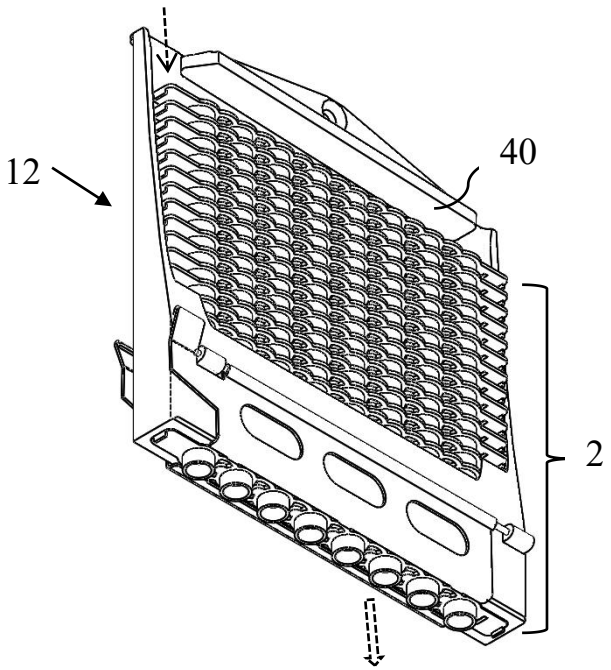

FIG 5

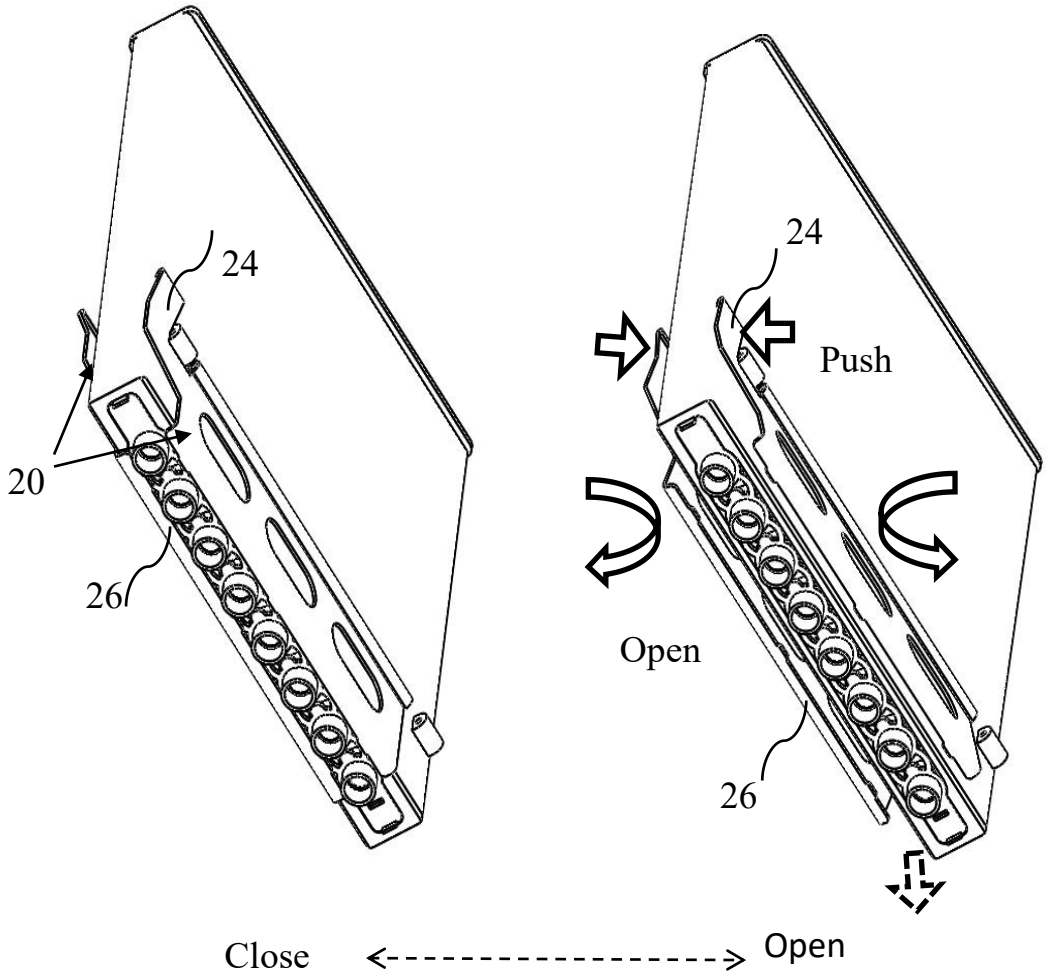

FIG 6

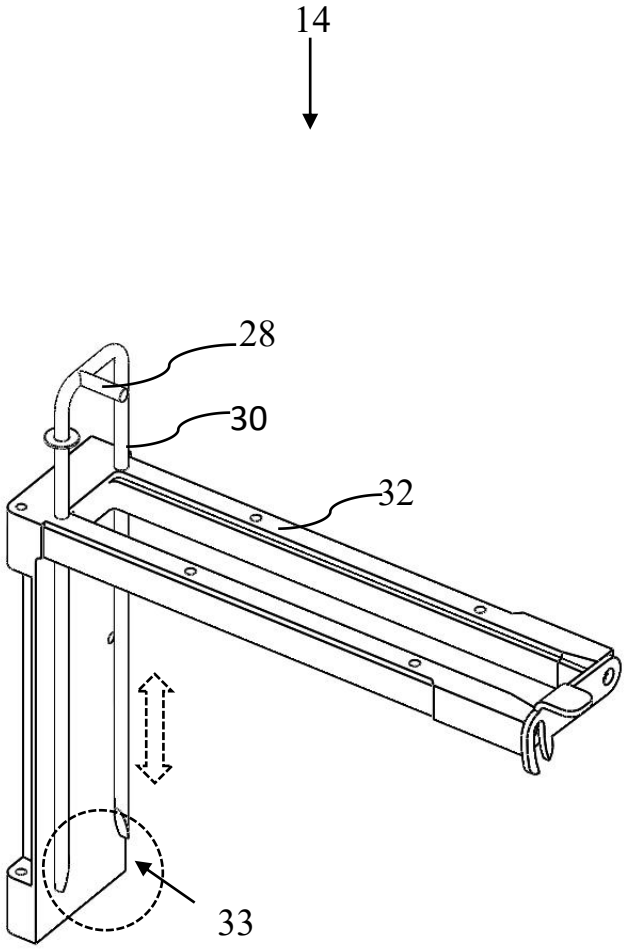

FIG 7

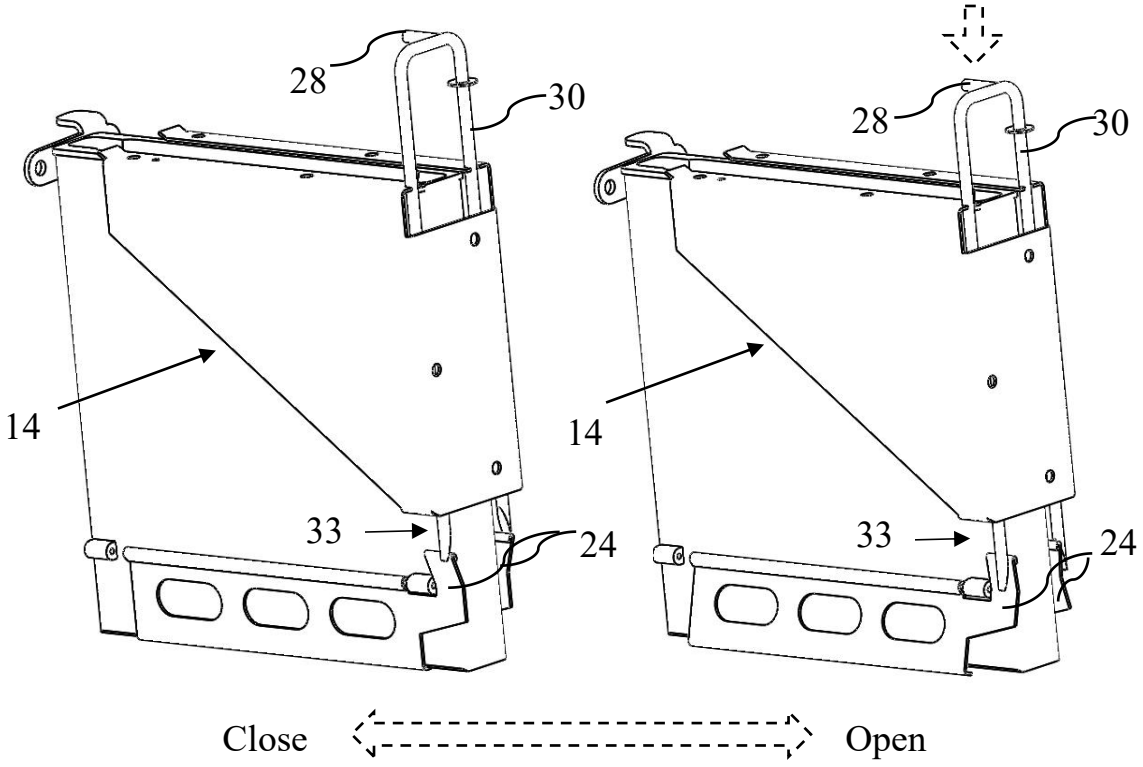

FIG 8

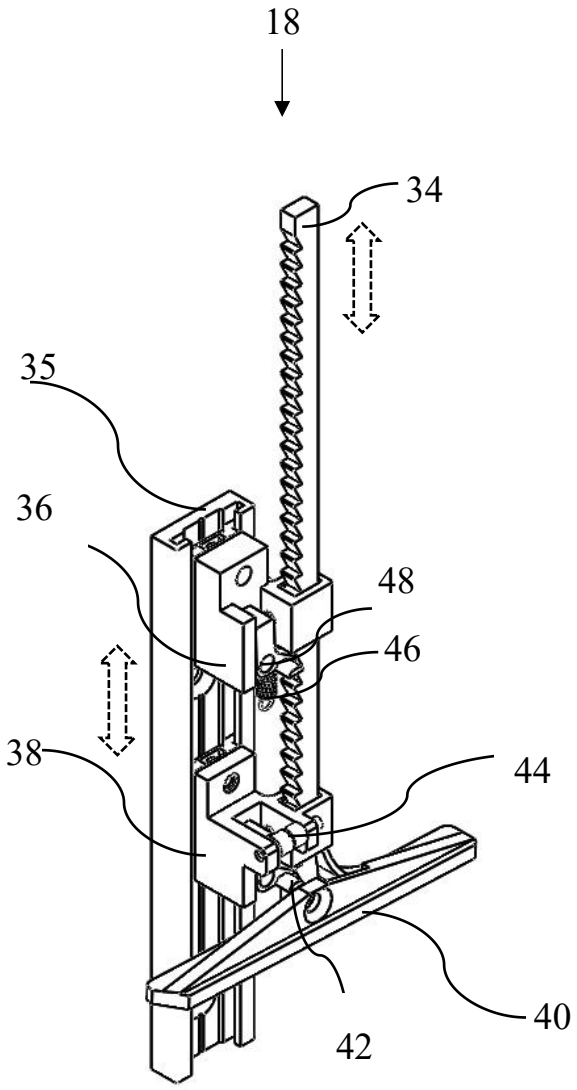

FIG 9

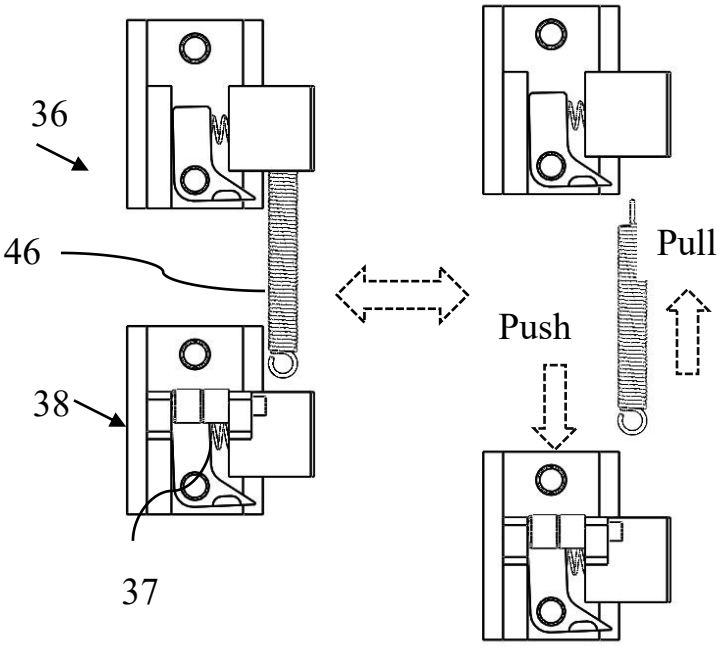

FIG 10

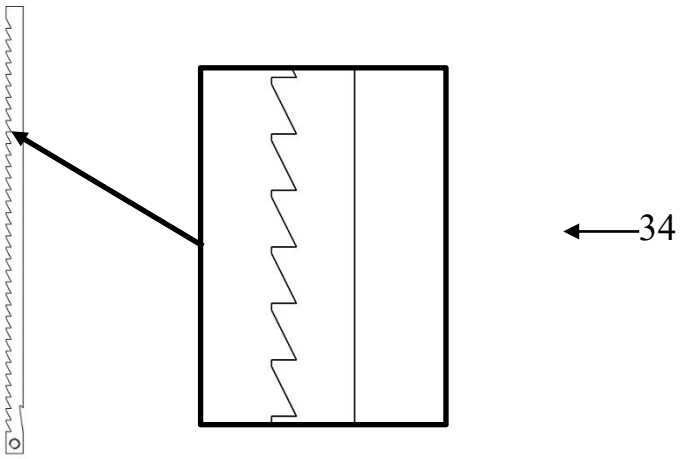

FIG 11

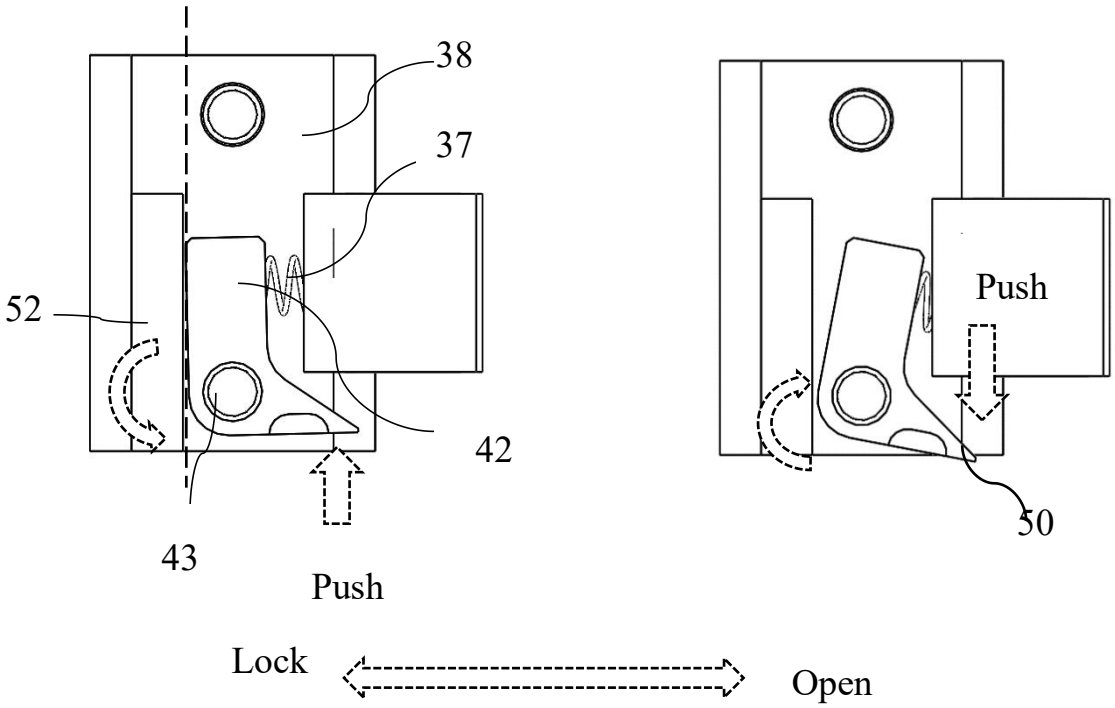

FIG 12

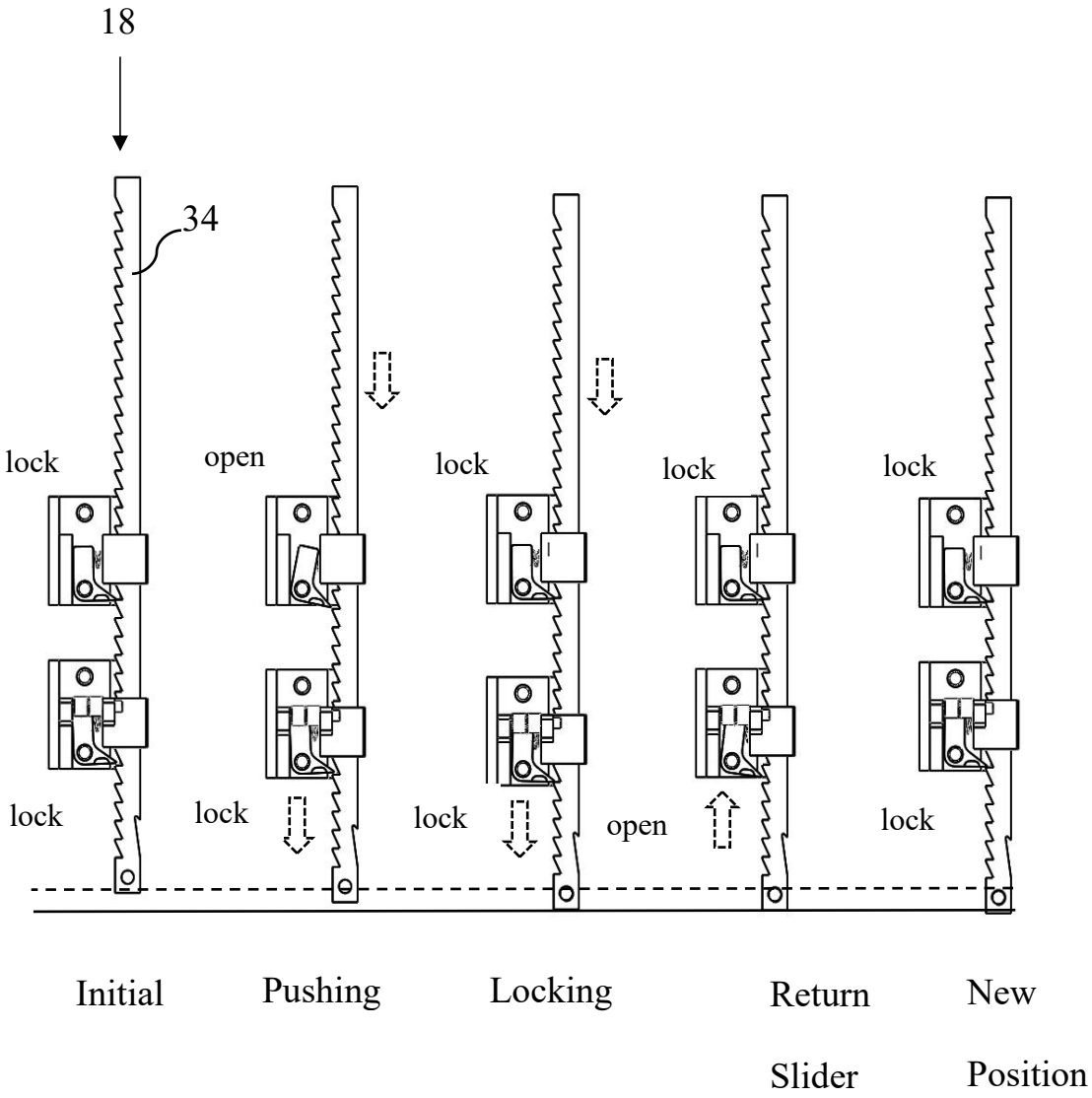
18
34
lock
open
lock
lock
lock
lock
lock
lock
open
lock
Initial
Pushing
Locking
Return Slider
New Position

FIG 13

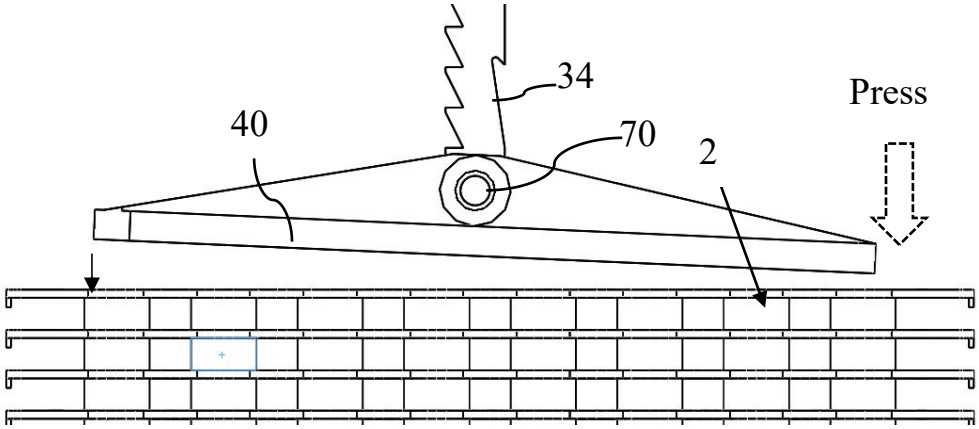

FIG 14(a)

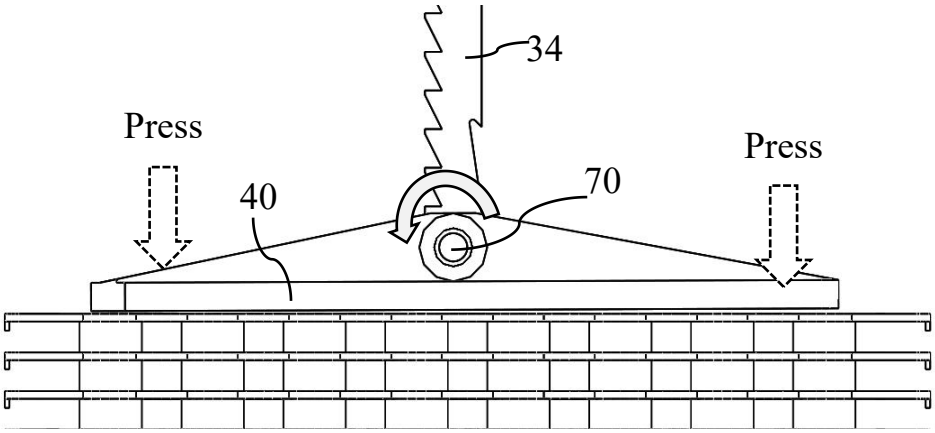

FIG 14(b)

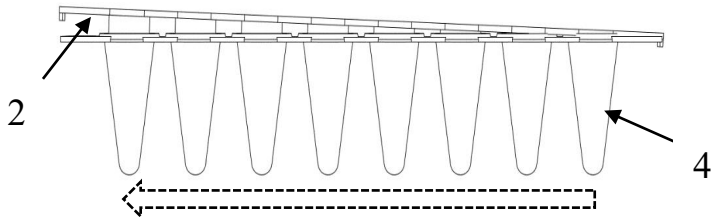

FIG 14(c)

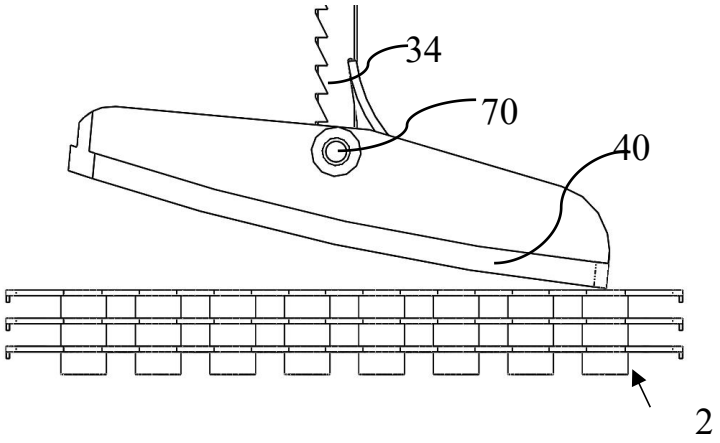

FIG 15(a)

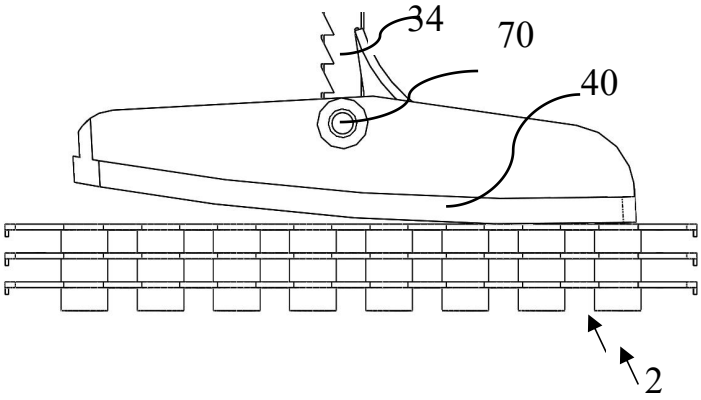

FIG 15(b)

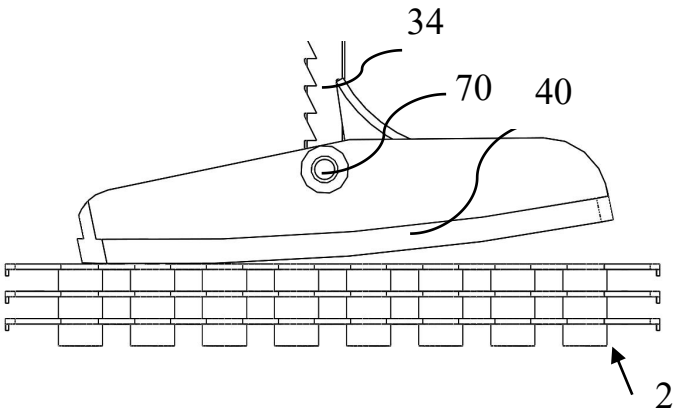

FIG 15(c)

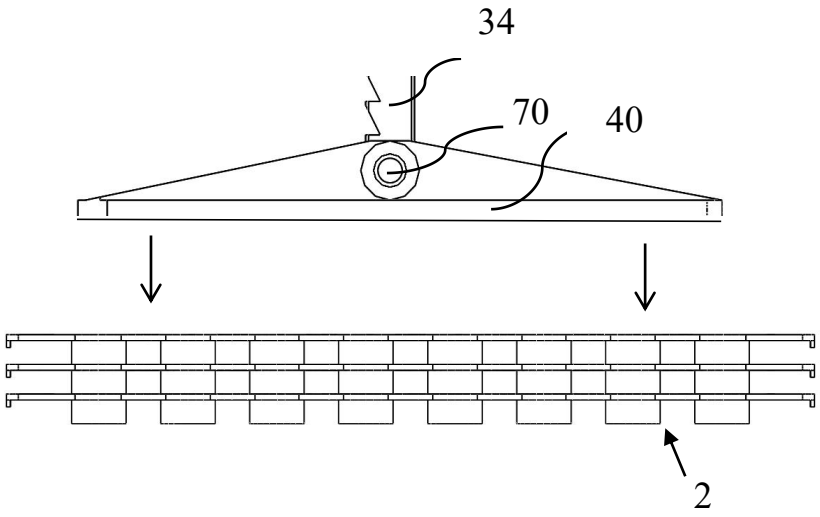

FIG 16(a)

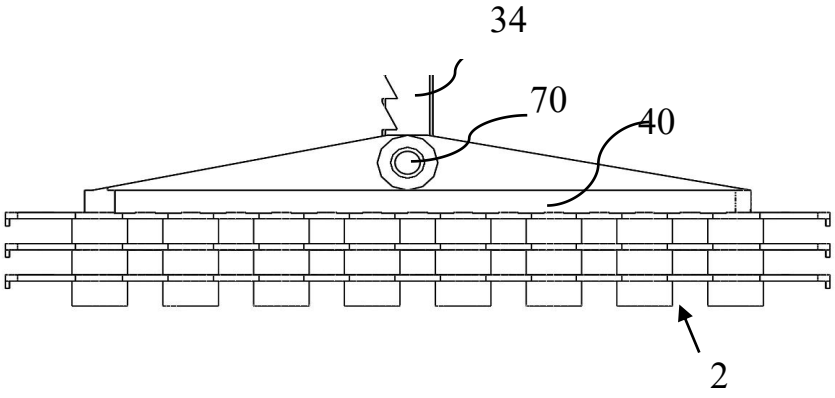

FIG 16(b)

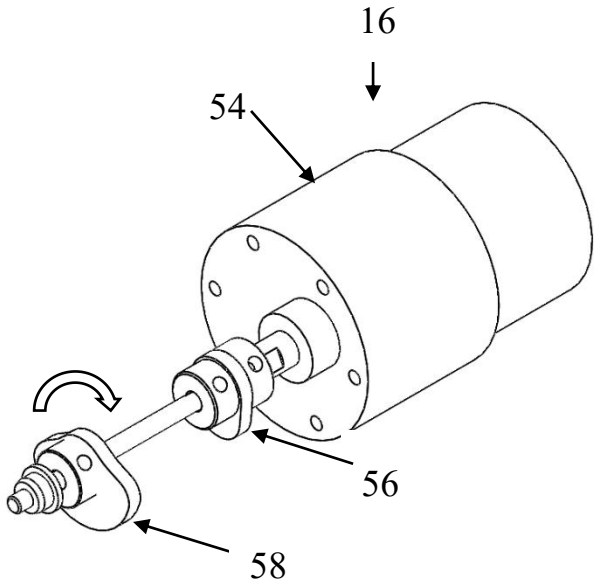
16
54
56
58

FIG 17

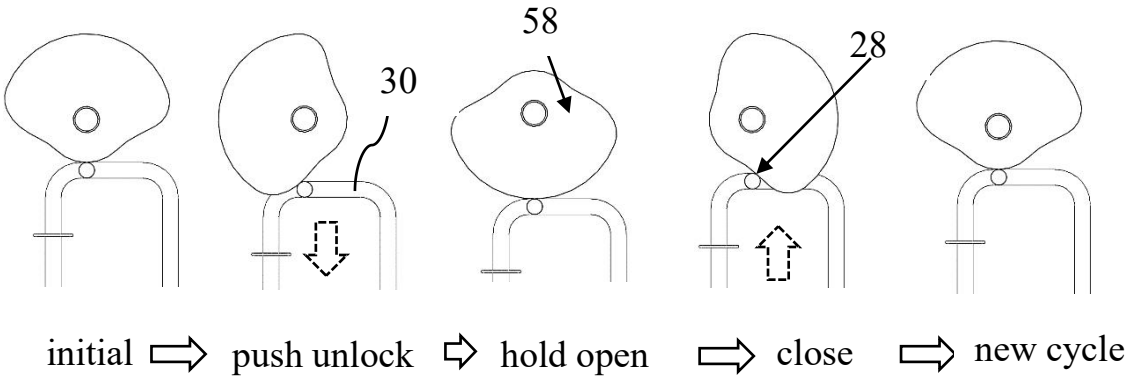
58
30
28
initial
push unlock
hold open
close
new cycle

FIG 18

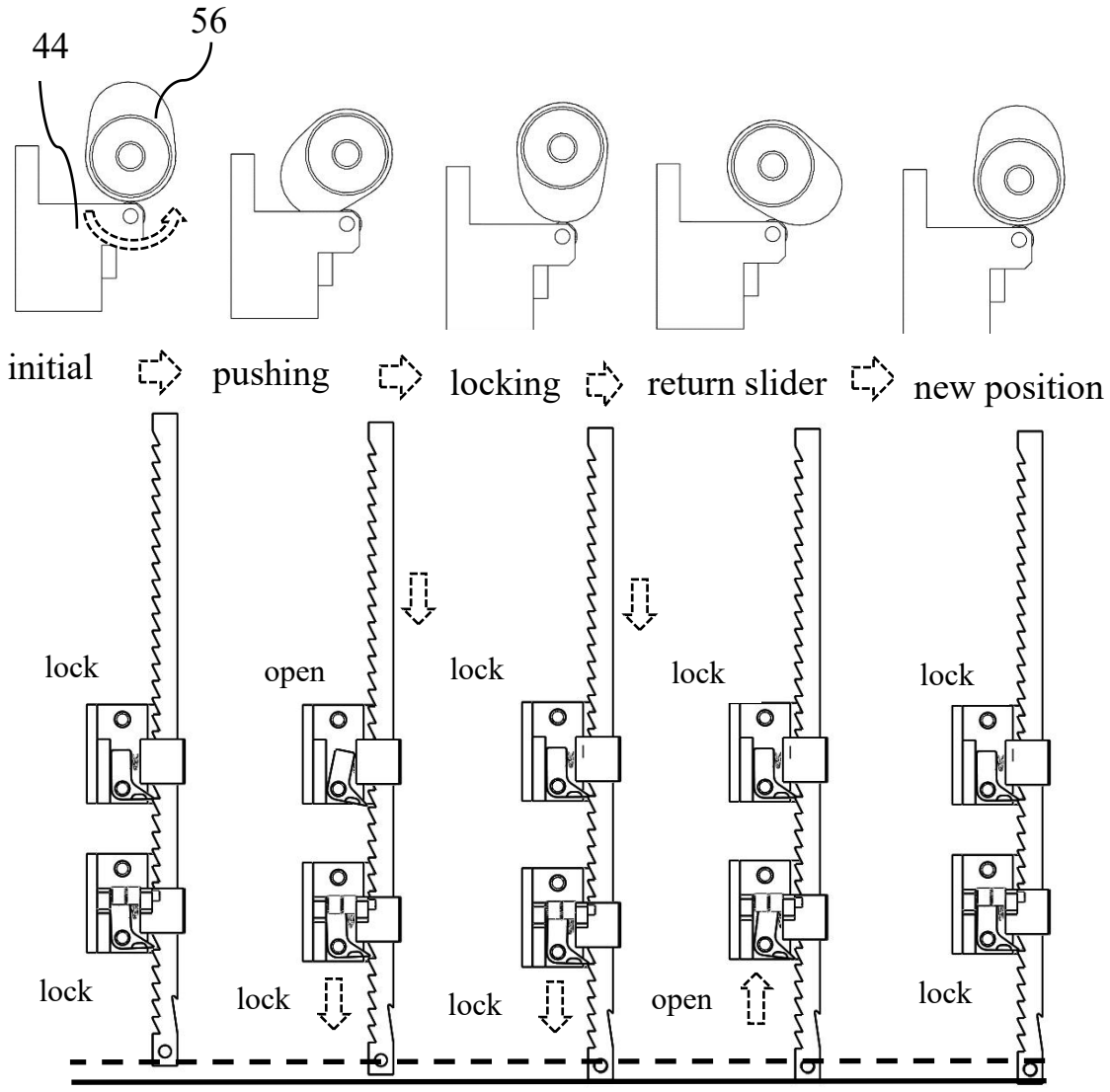
44
56
initial
pushing
locking
return slider
new position
lock
lock
open
lock
lock
lock
lock
lock
open
lock

FIG 19

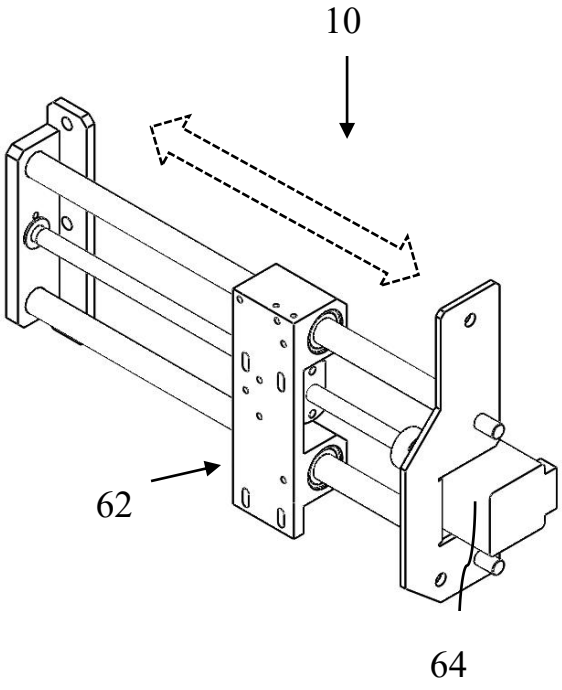

FIG 20

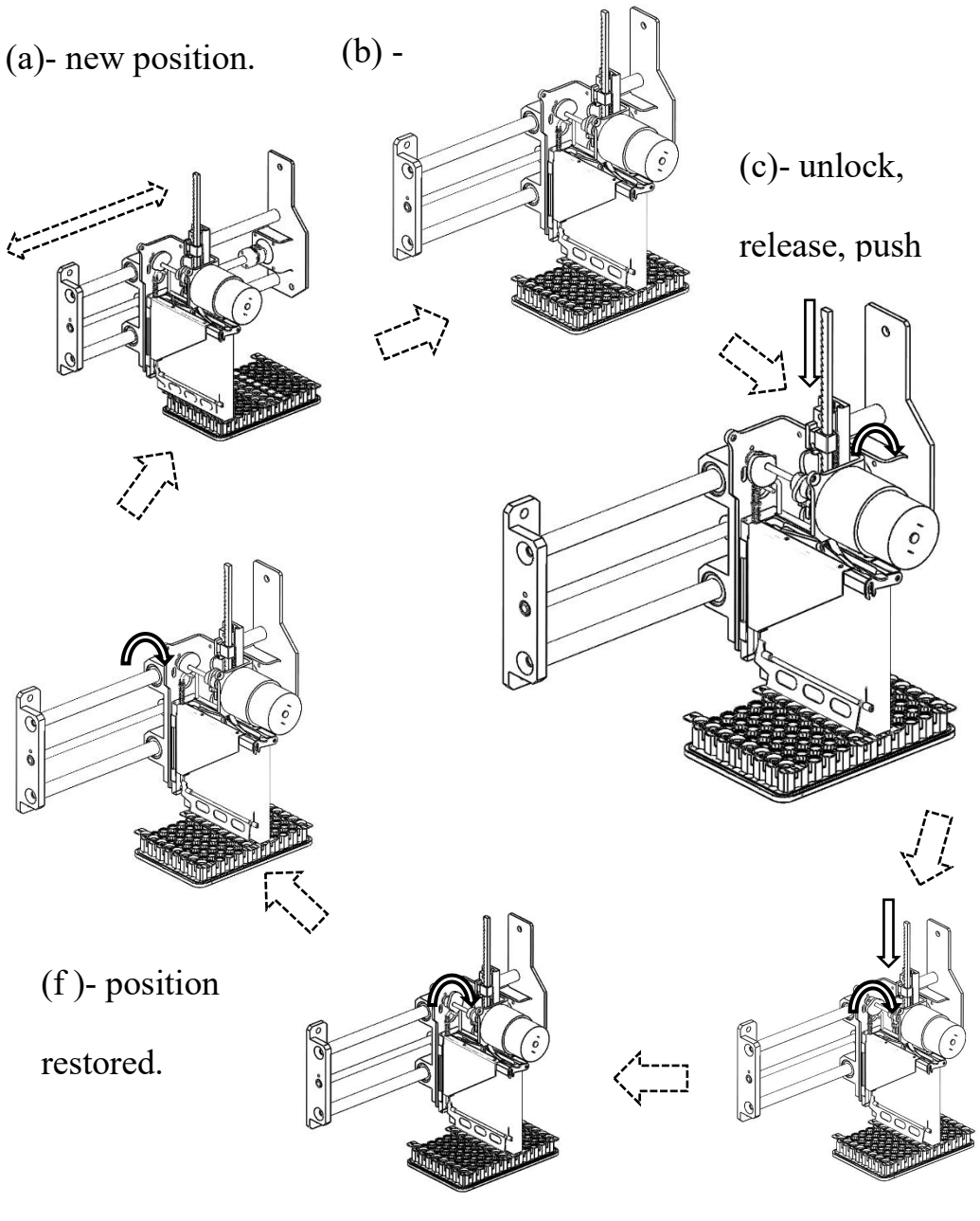
(a)- new position.
(b) -
(c)- unlock,
release, push
(f)- position
restored.
(e)-close, slider to position
(d)- lock, strip

FIG 21

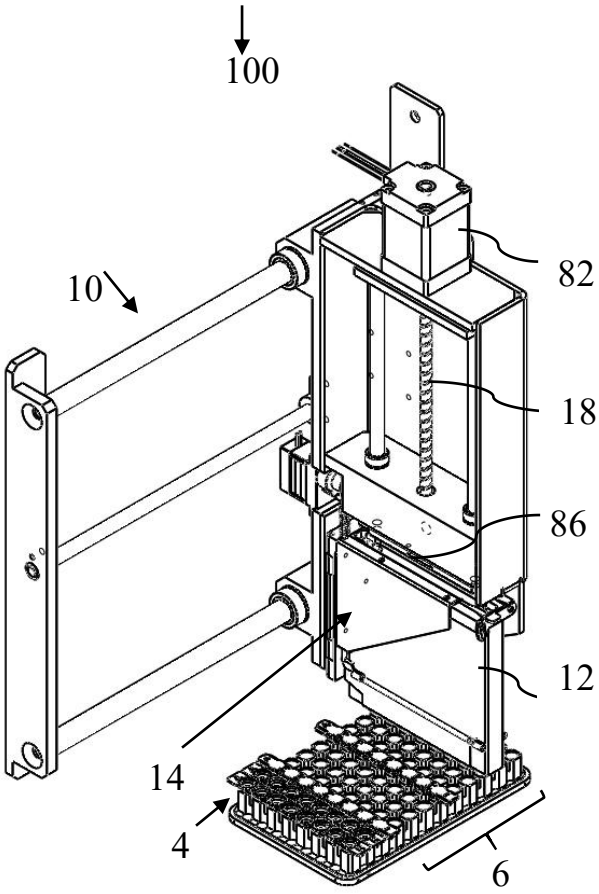

FIG 22(a)

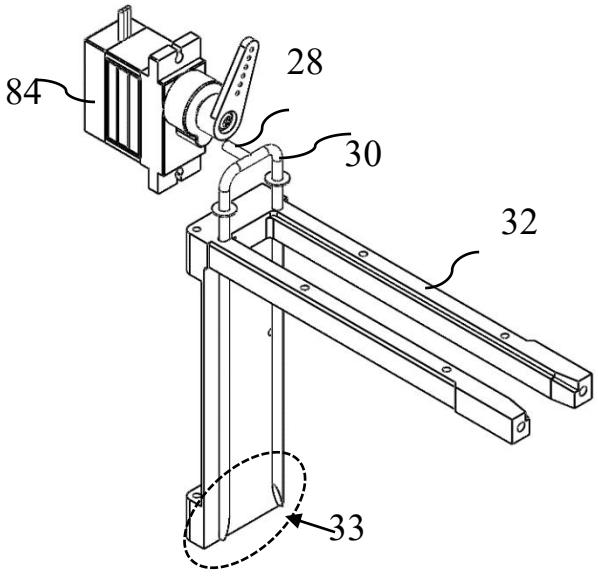

FIG 22(b)

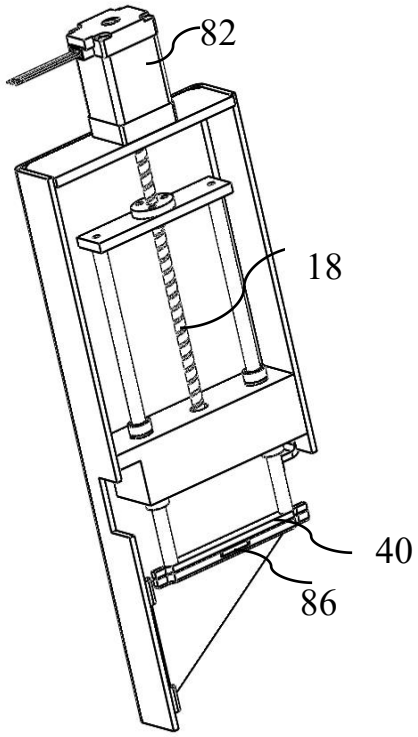

FIG 22(c)

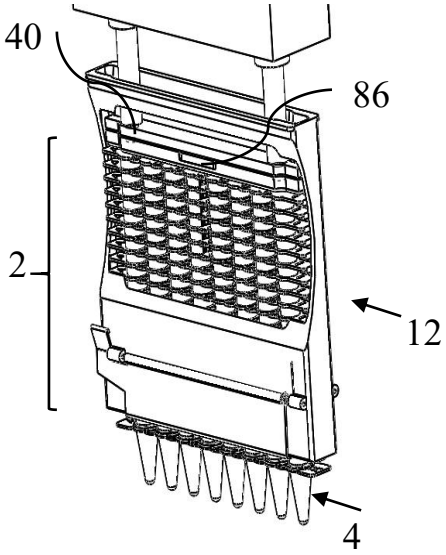

FIG 22(d)

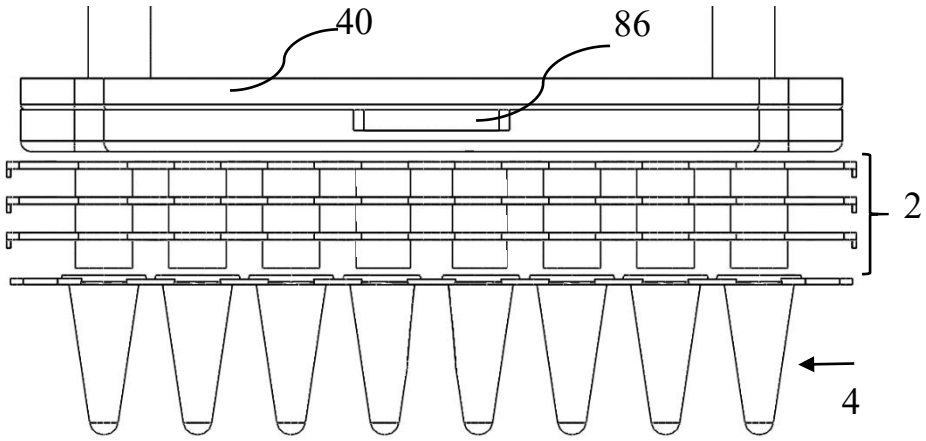

FIG 22(e)

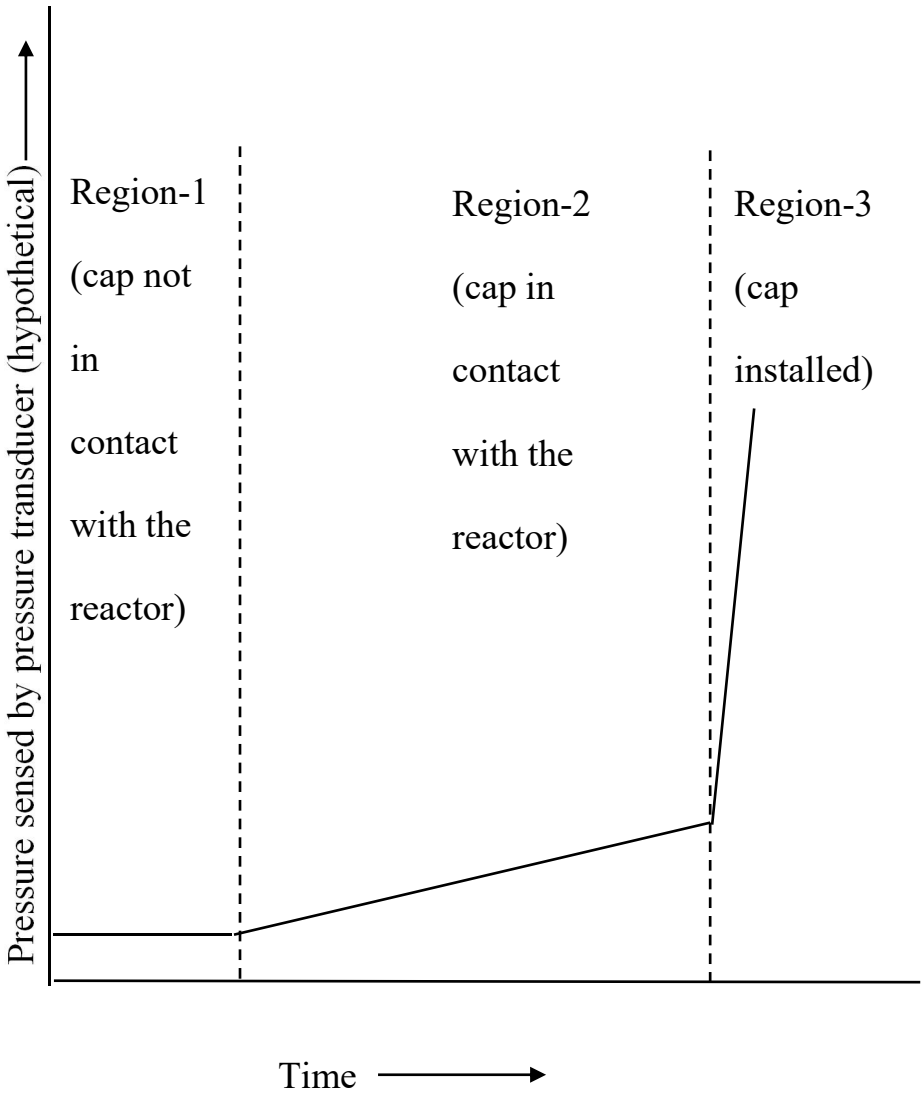
Pressure sensed by pressure transducer (hypothetical)
Region-1
(cap not
in
contact
with the
reactor)
Region-2
(cap in
contact
with the
reactor)
Region-3
(cap
installed)
Time

FIG 23

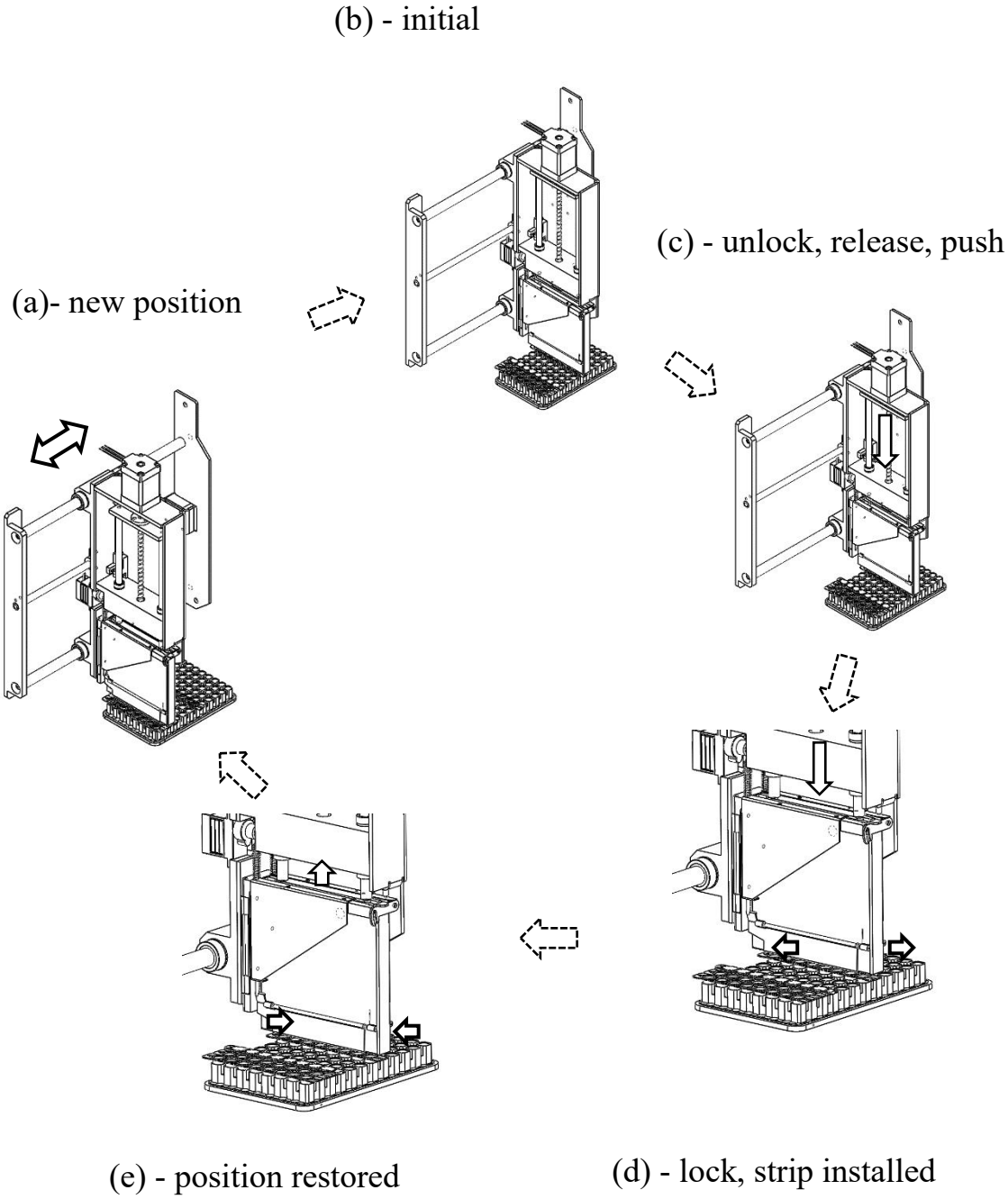
(b) - initial
(c) - unlock, release, push
(a)- new position
(e) - position restored
(d) - lock, strip installed

FIG 24

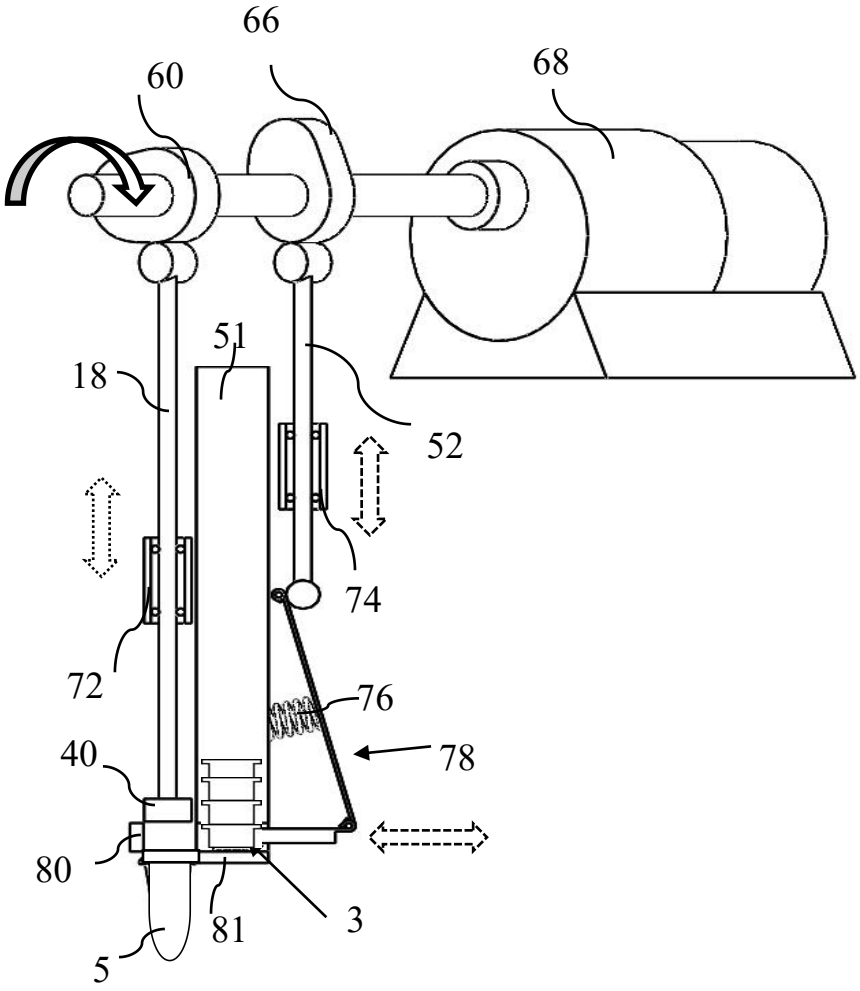

FIG 25

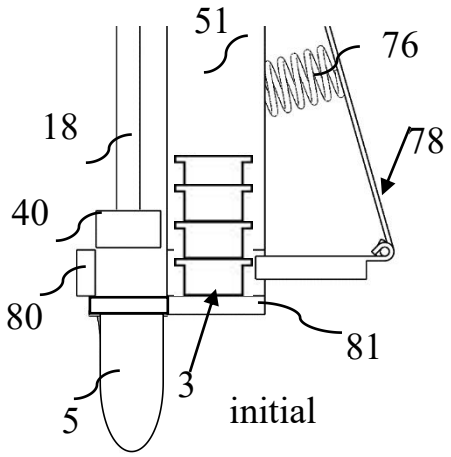

(a)

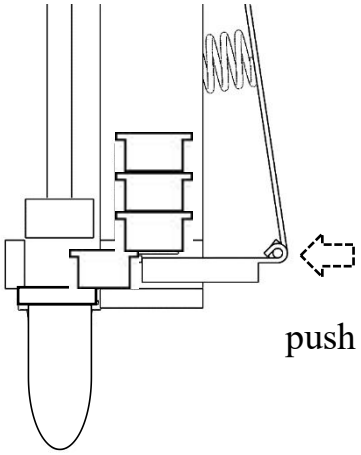

(b)

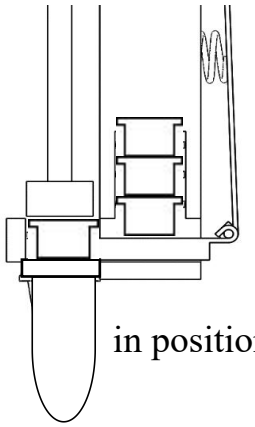

(c)

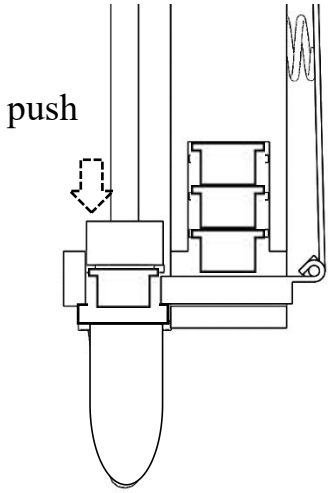

(d)

FIG 26

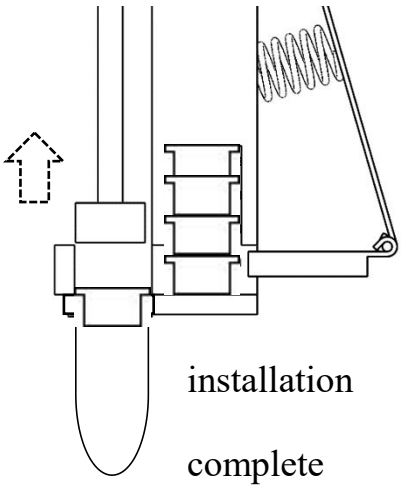

(e)

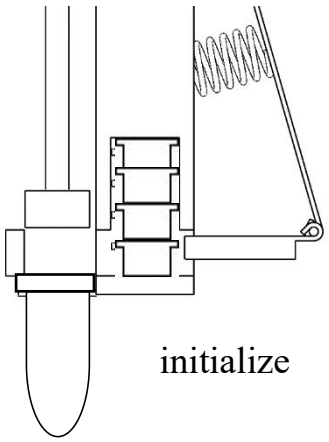

(f)

FIG 26

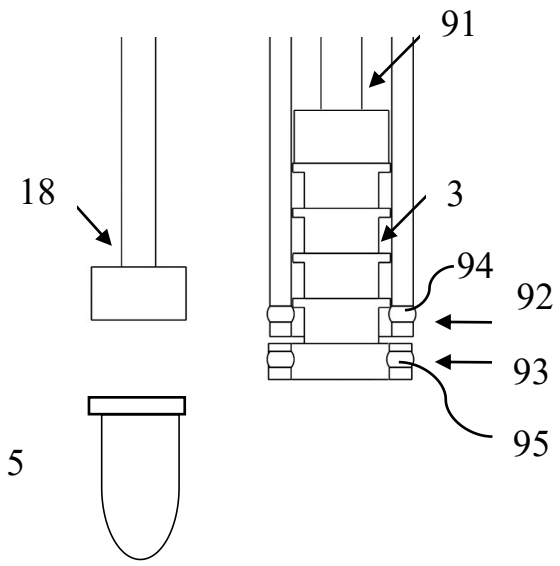

(a)

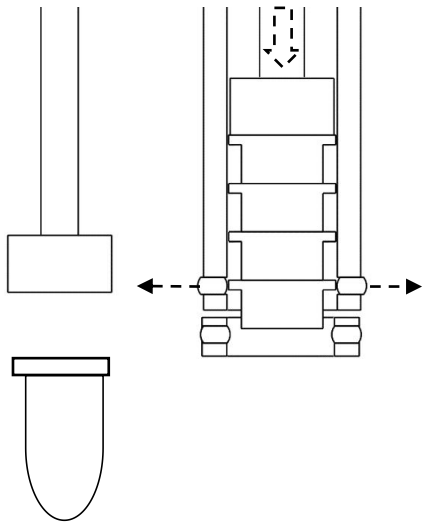

(b)

FIG 27

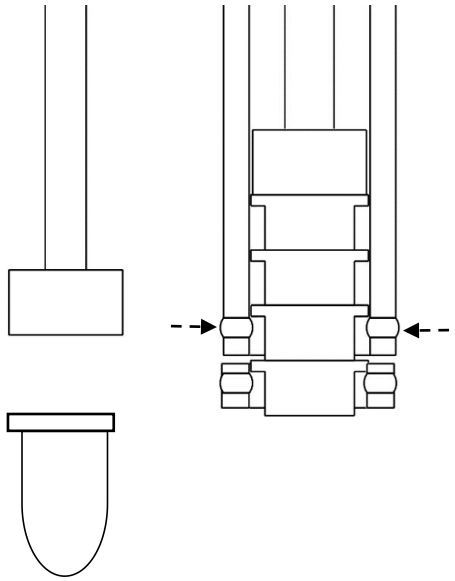

(c)

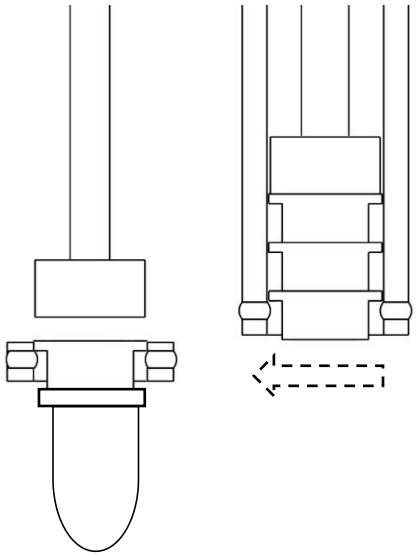

(d)

FIG 27

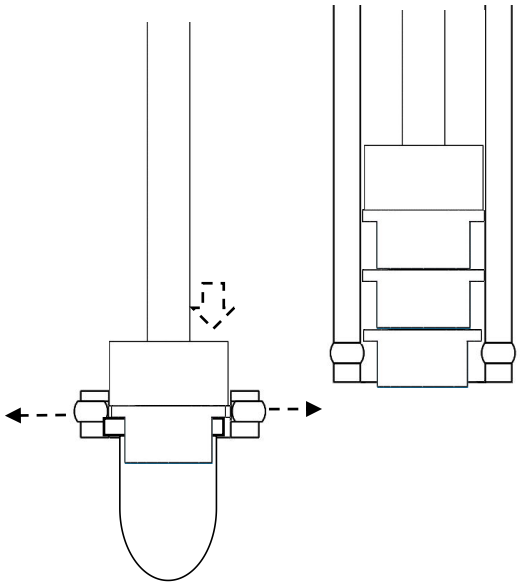

(e)

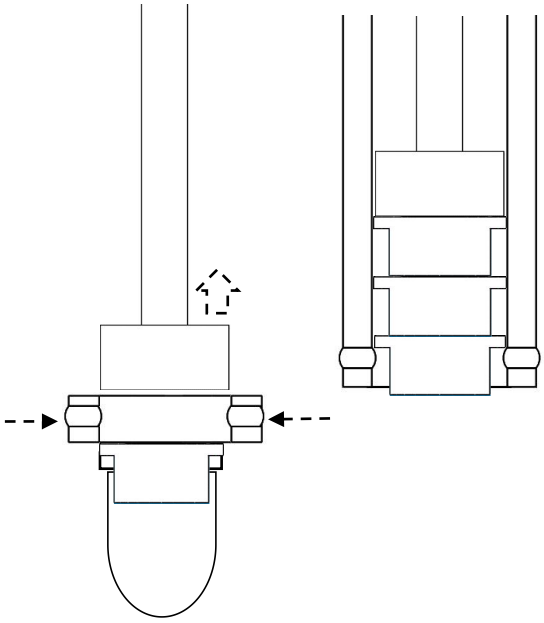

(f)

FIG 27