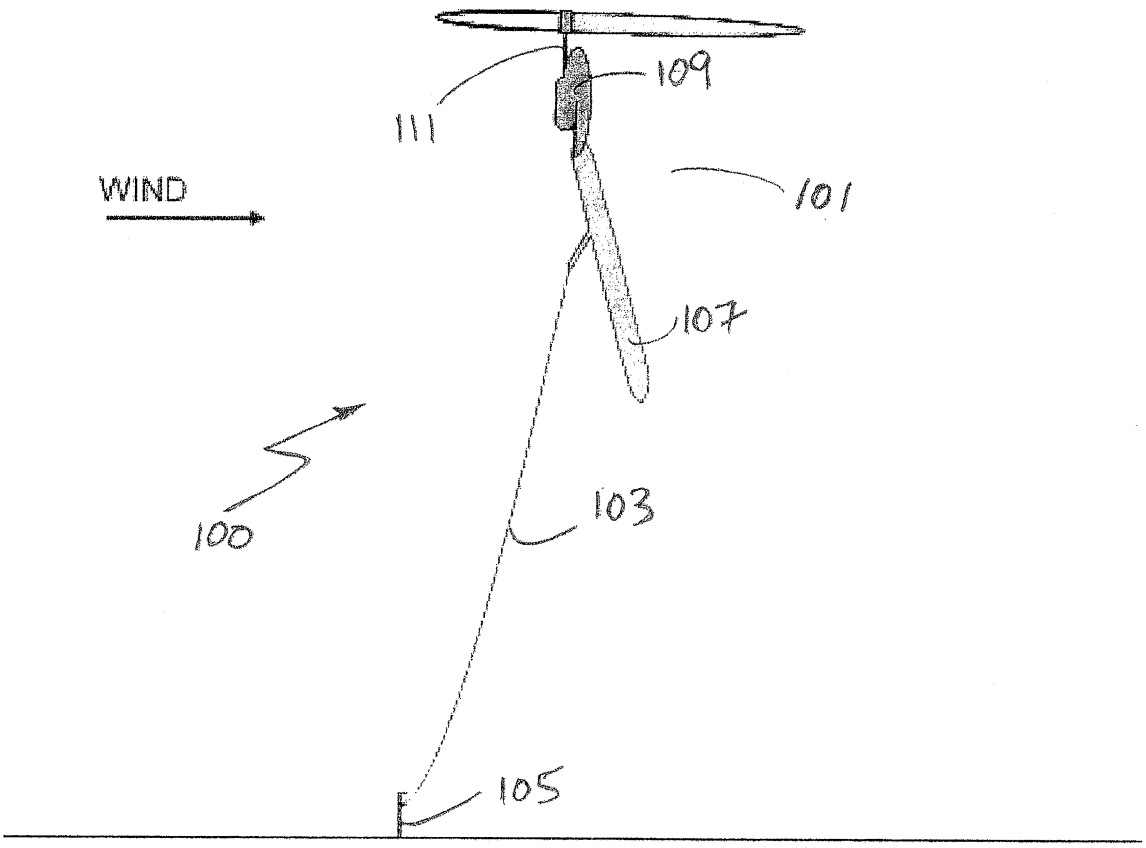

Figure 1

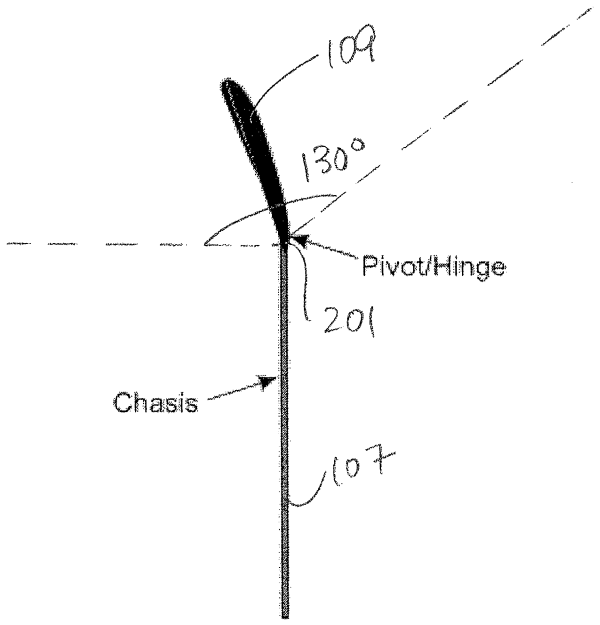

Figure 2

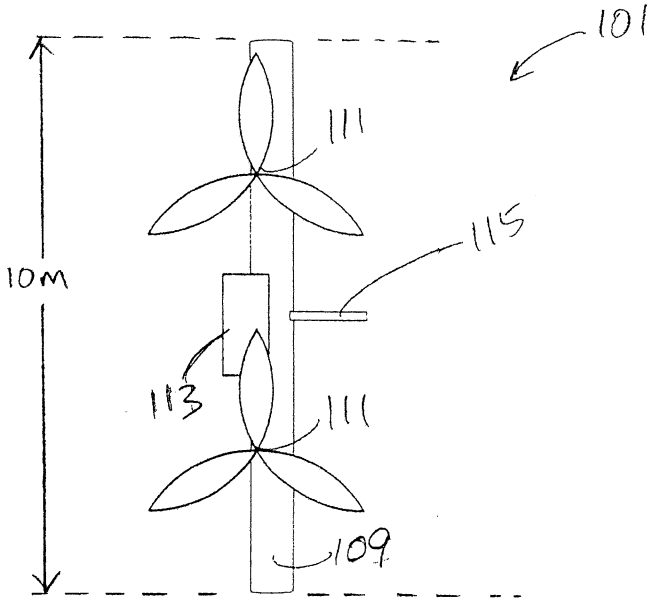

Figure 3(a)

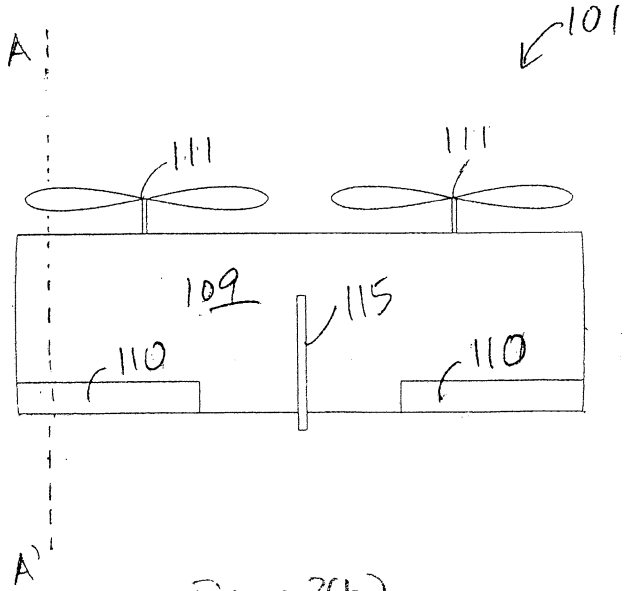

Figure 3(b)

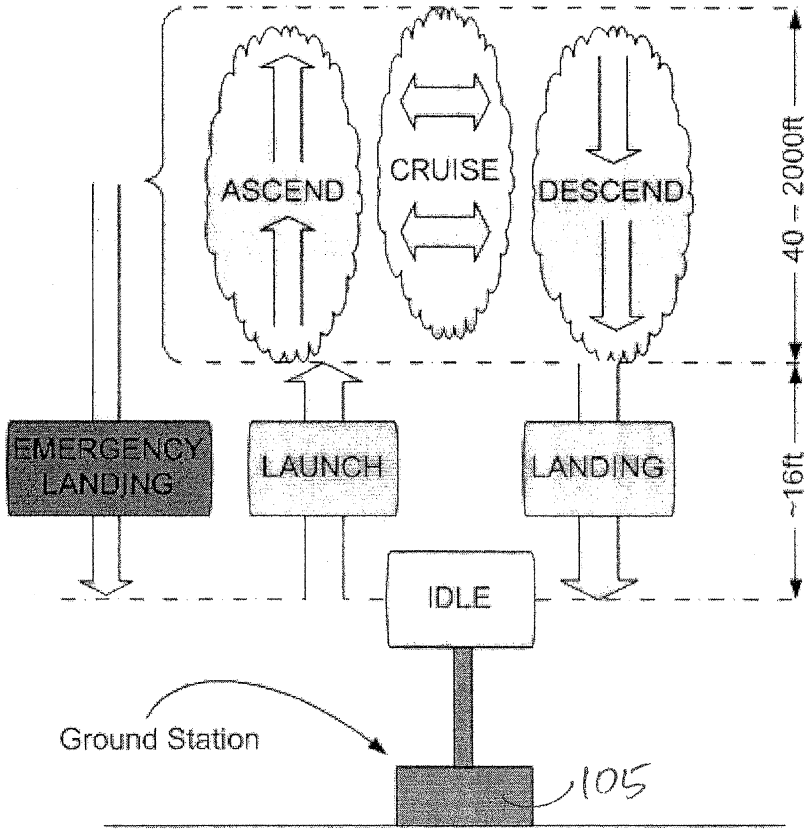
ASCEND
CRUISE
DESCEND
40 – 2000ft
~16ft
EMERGENCY LANDING
LAUNCH
LANDING
IDLE
Ground Station
105

Figure 4

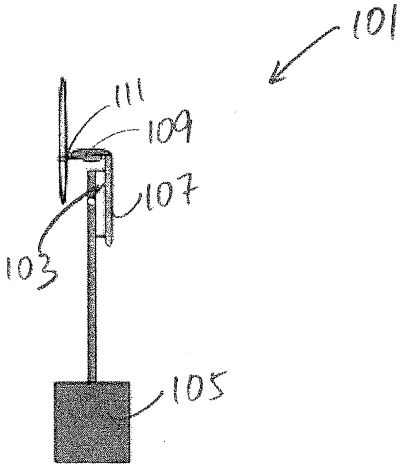

Figure 5

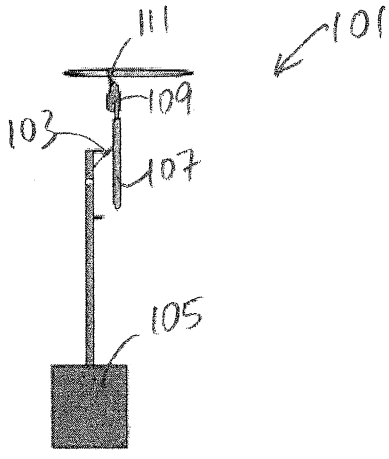

Figure 6

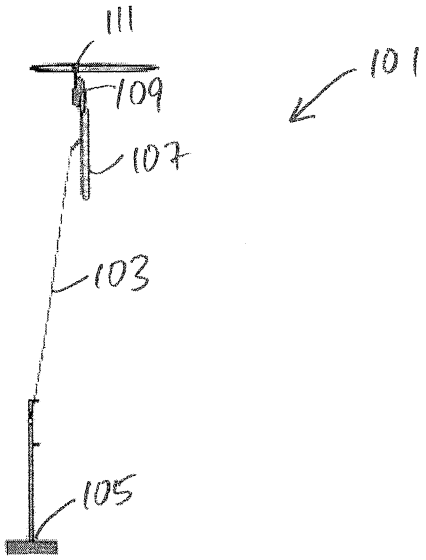

Figure 7

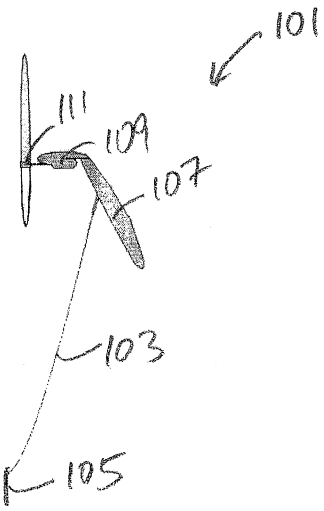

Figure 8