Fig. 1

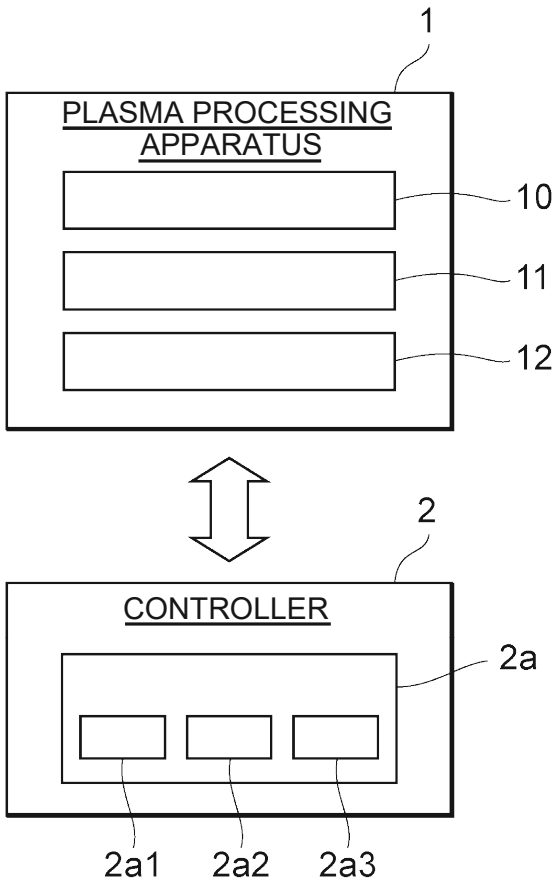
1
PLASMA PROCESSING APPARATUS
10
11
12
2
CONTROLLER
2a
2a1
2a2
2a3

Fig. 2

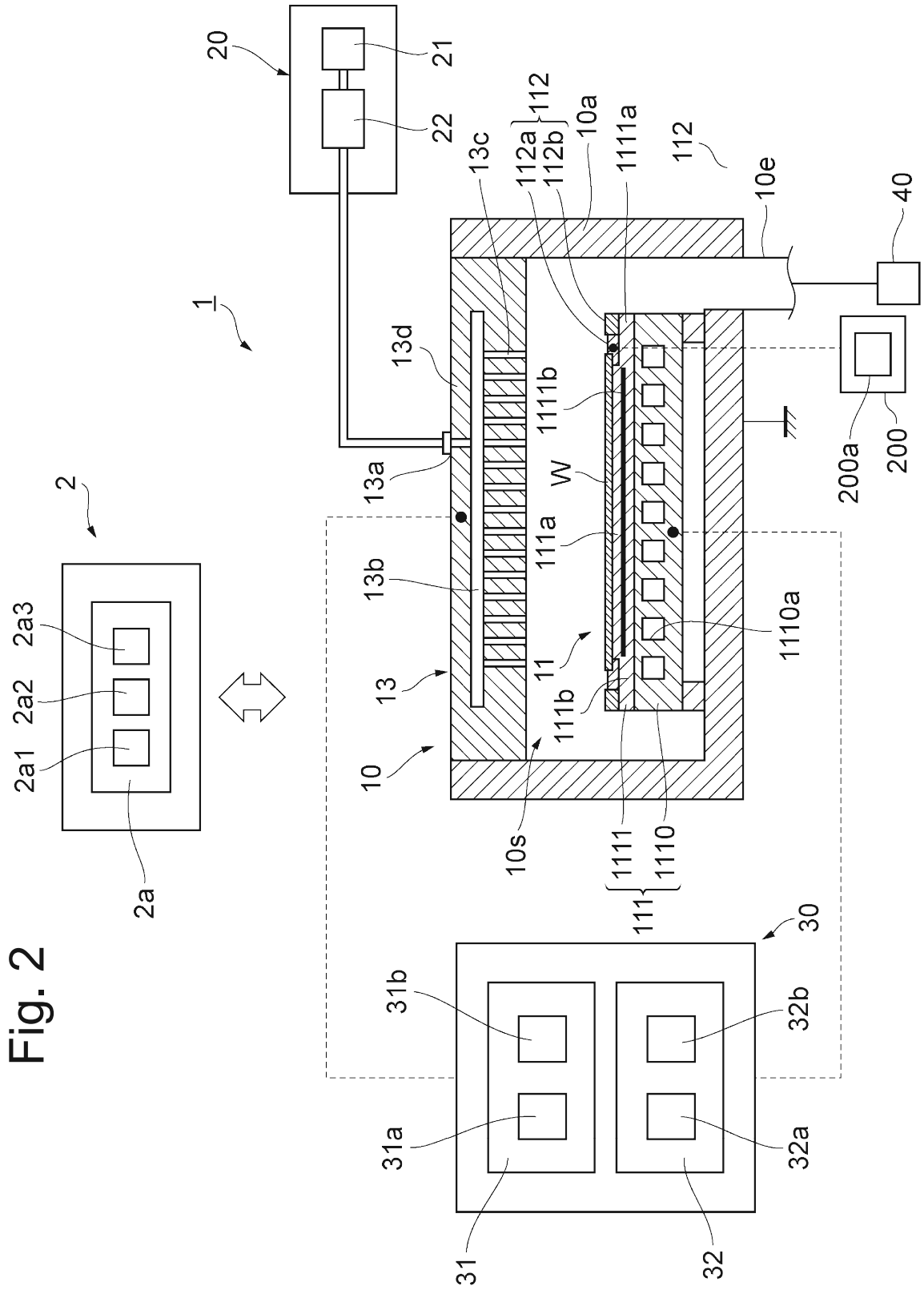
20
21
22
1
2
2a3
2a2
2a1
2a
13c
112a
112b
112
10a
1111a
112
10e
40
13d
1111b
13a
W
111a
13b
13
11
111b
10
1110a
10s
1111
1110
111
30
31b
32b
31a
32a
31
32
200a
200

Fig. 3

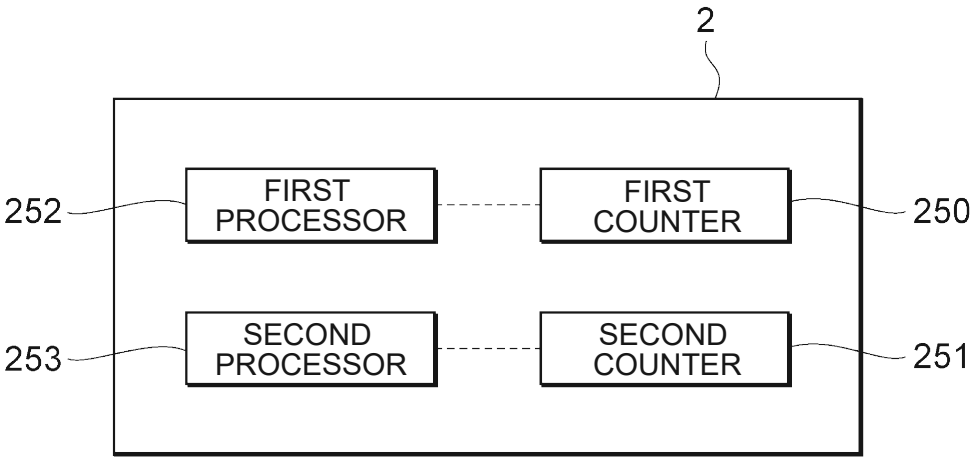
2
252
FIRST PROCESSOR
FIRST COUNTER
250
253
SECOND PROCESSOR
SECOND COUNTER
251

Fig. 4

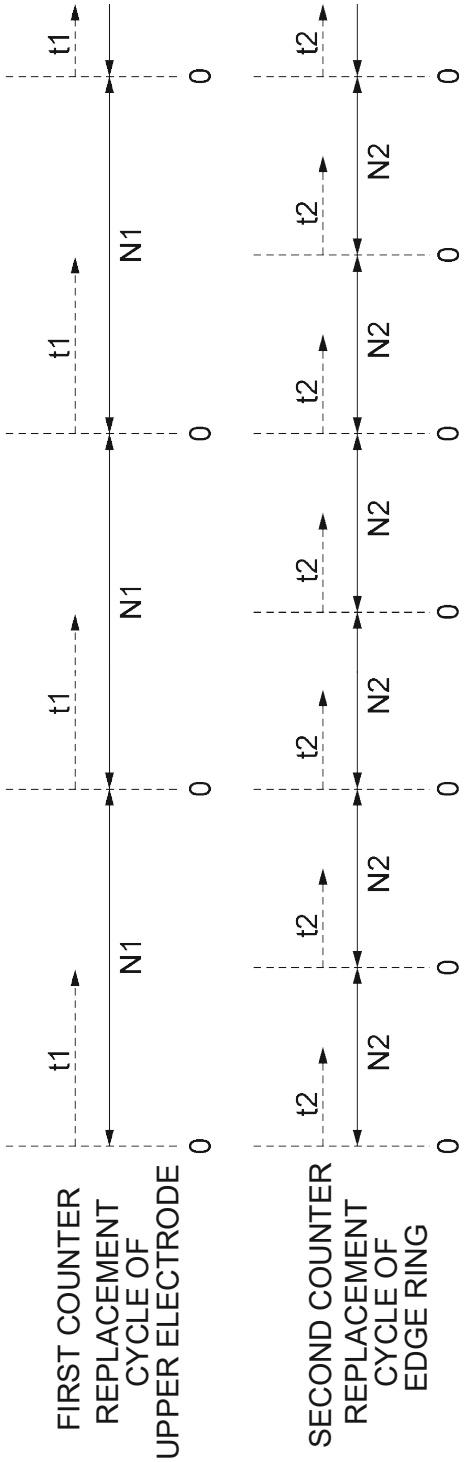
FIRST COUNTER REPLACEMENT CYCLE OF UPPER ELECTRODE
SECOND COUNTER REPLACEMENT CYCLE OF EDGE RING
t1
t2
N1
N2
0

Fig. 5

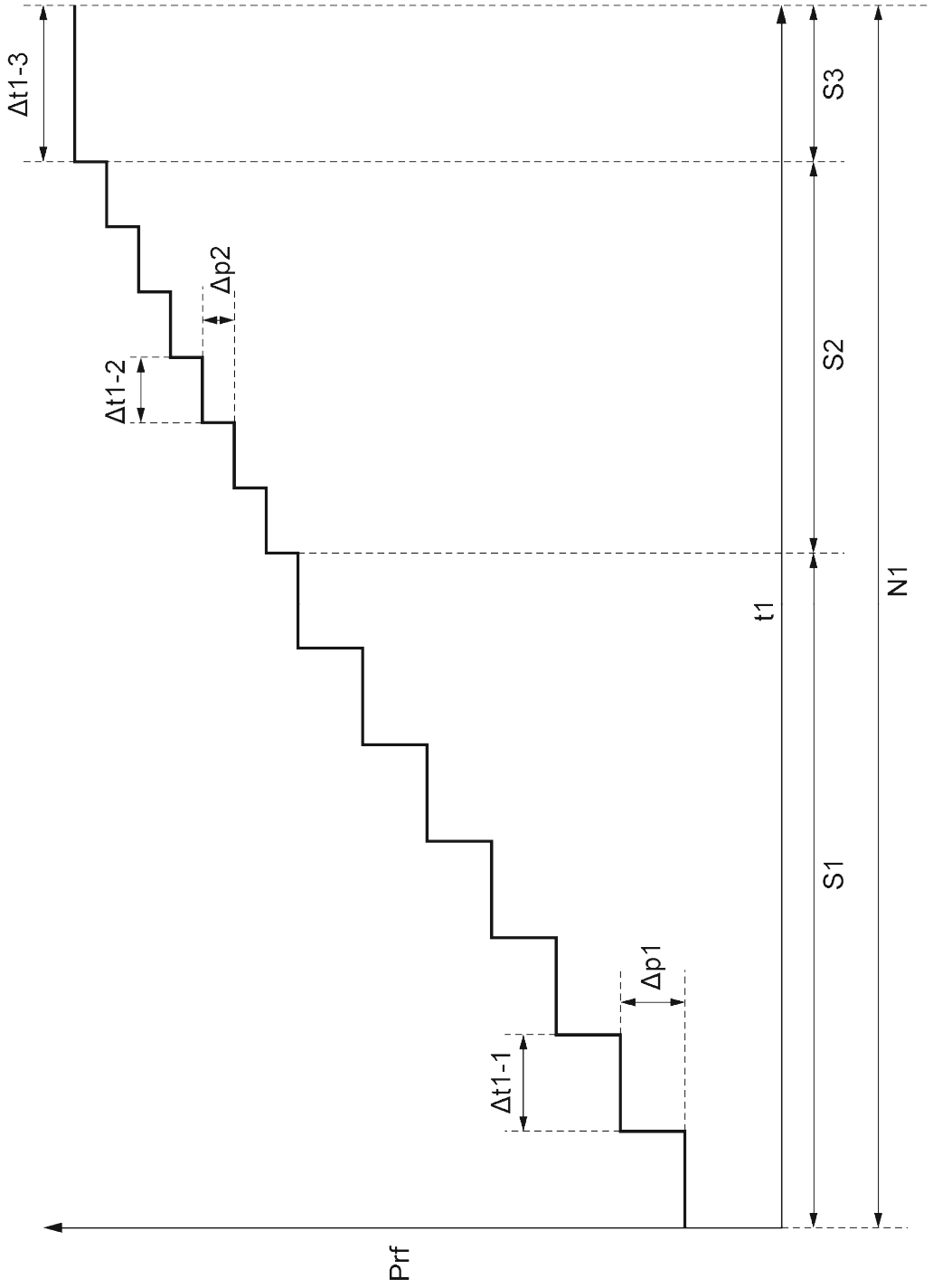

Fig. 6

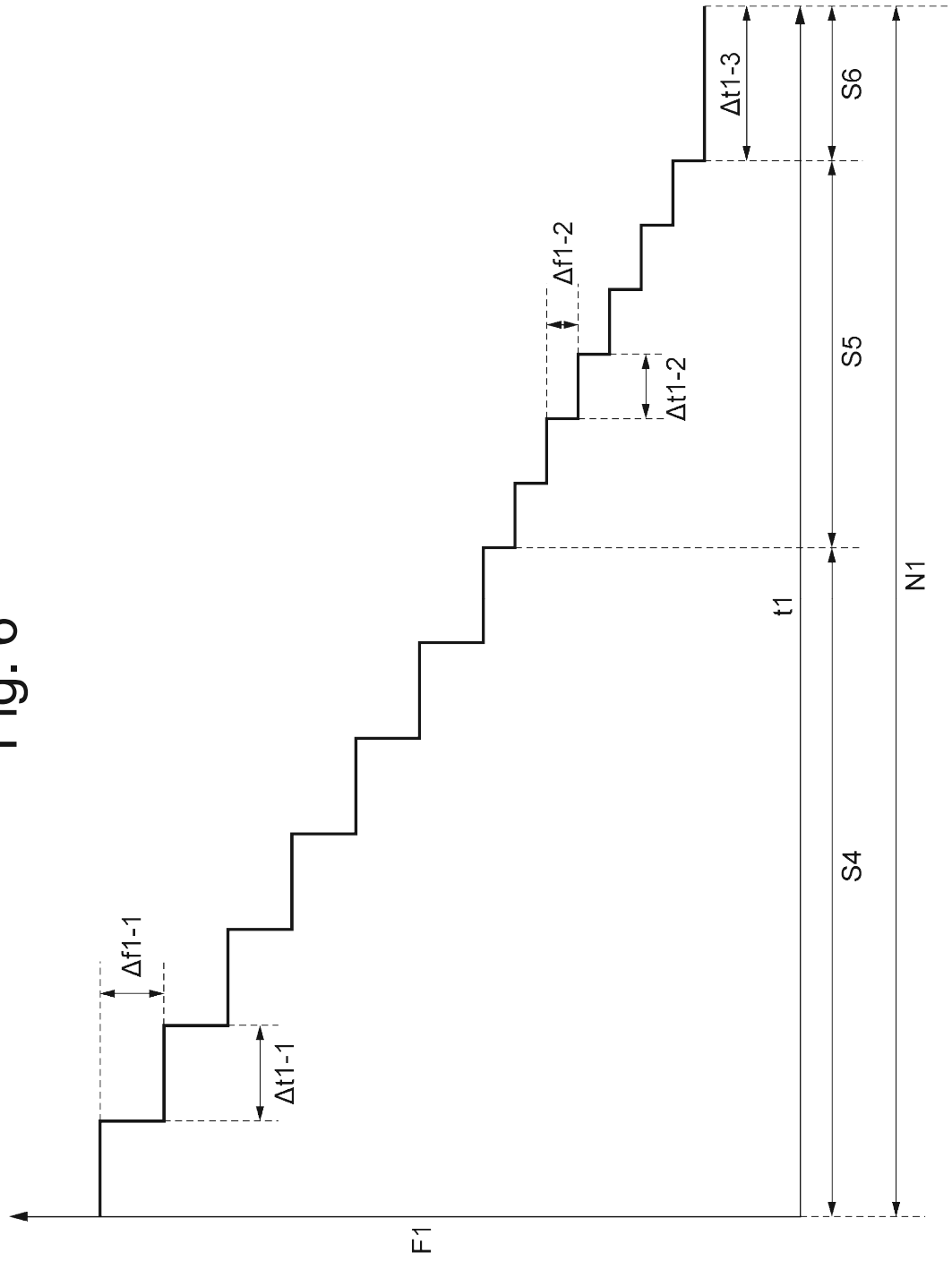

Fig. 7

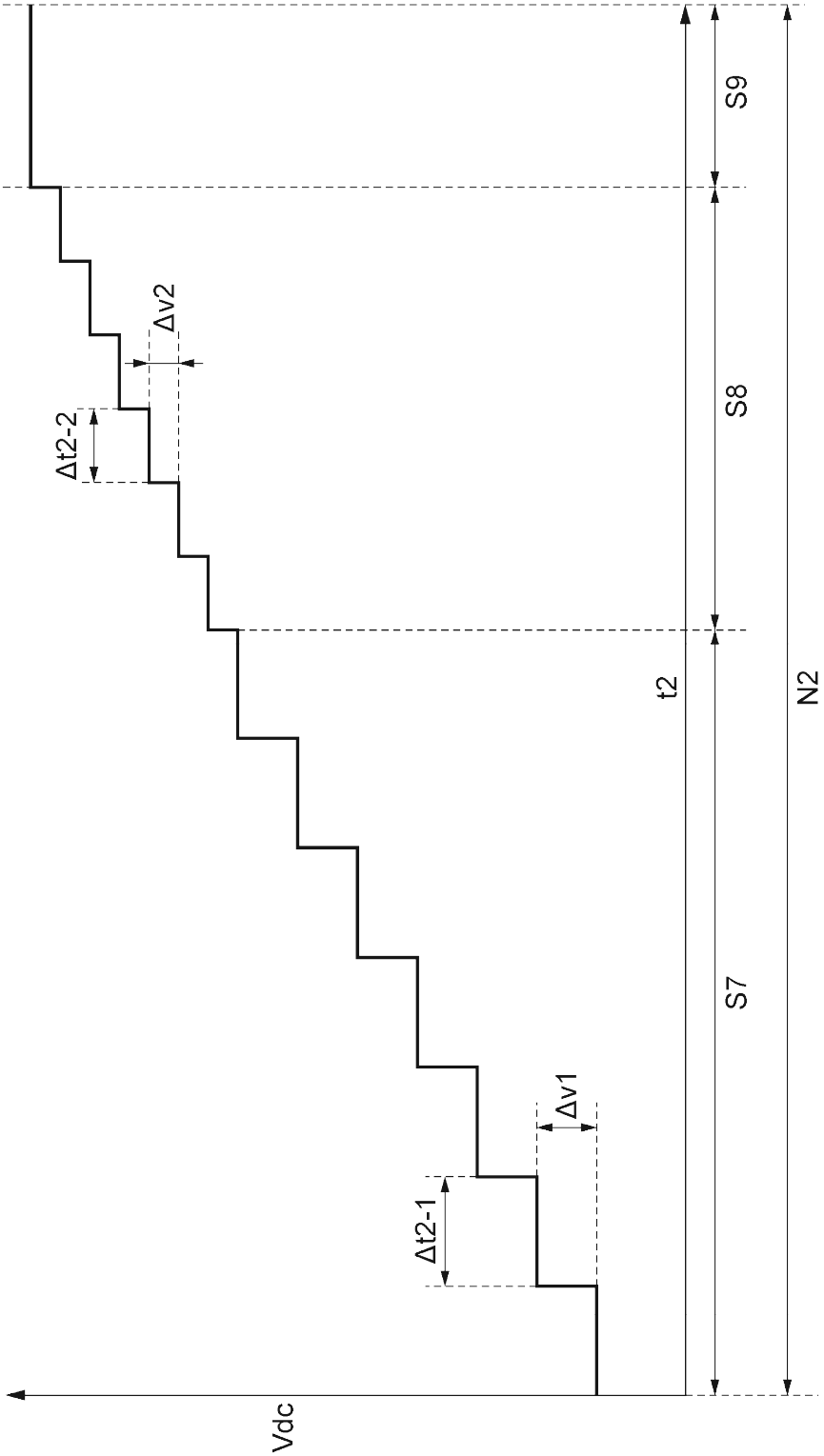

Fig. 8

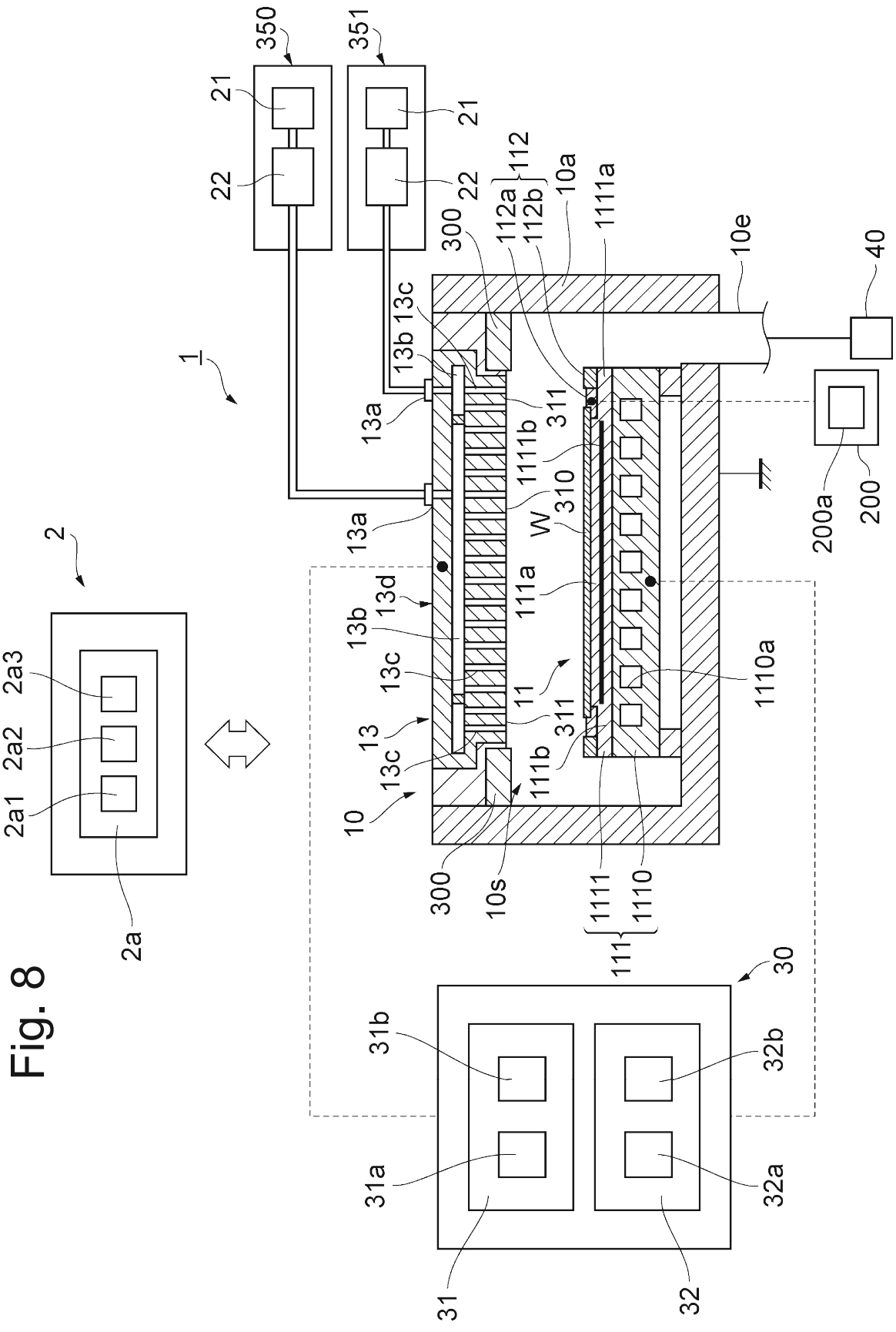
1
2
2a
2a1
2a2
2a3
10
10a
10e
10s
11
111
1110
1110a
1111
1111a
1111b
112
112a
112b
13
13a
13b
13c
13d
21
22
30
31
31a
31b
32
32a
32b
40
200
200a
300
310
311
350
351
W

Fig. 9

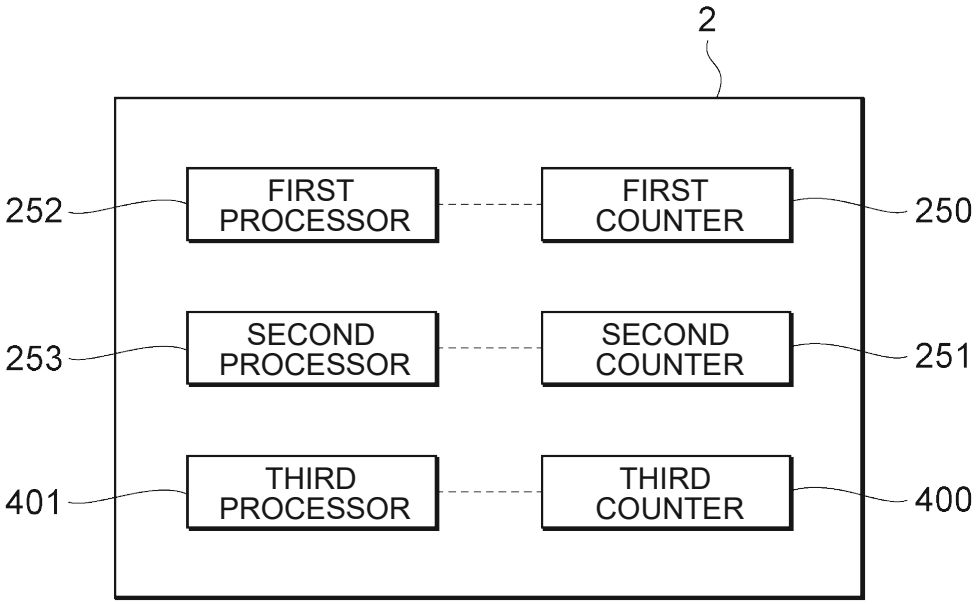
2
252
FIRST PROCESSOR
FIRST COUNTER
250
253
SECOND PROCESSOR
SECOND COUNTER
251
401
THIRD PROCESSOR
THIRD COUNTER
400

Fig. 10

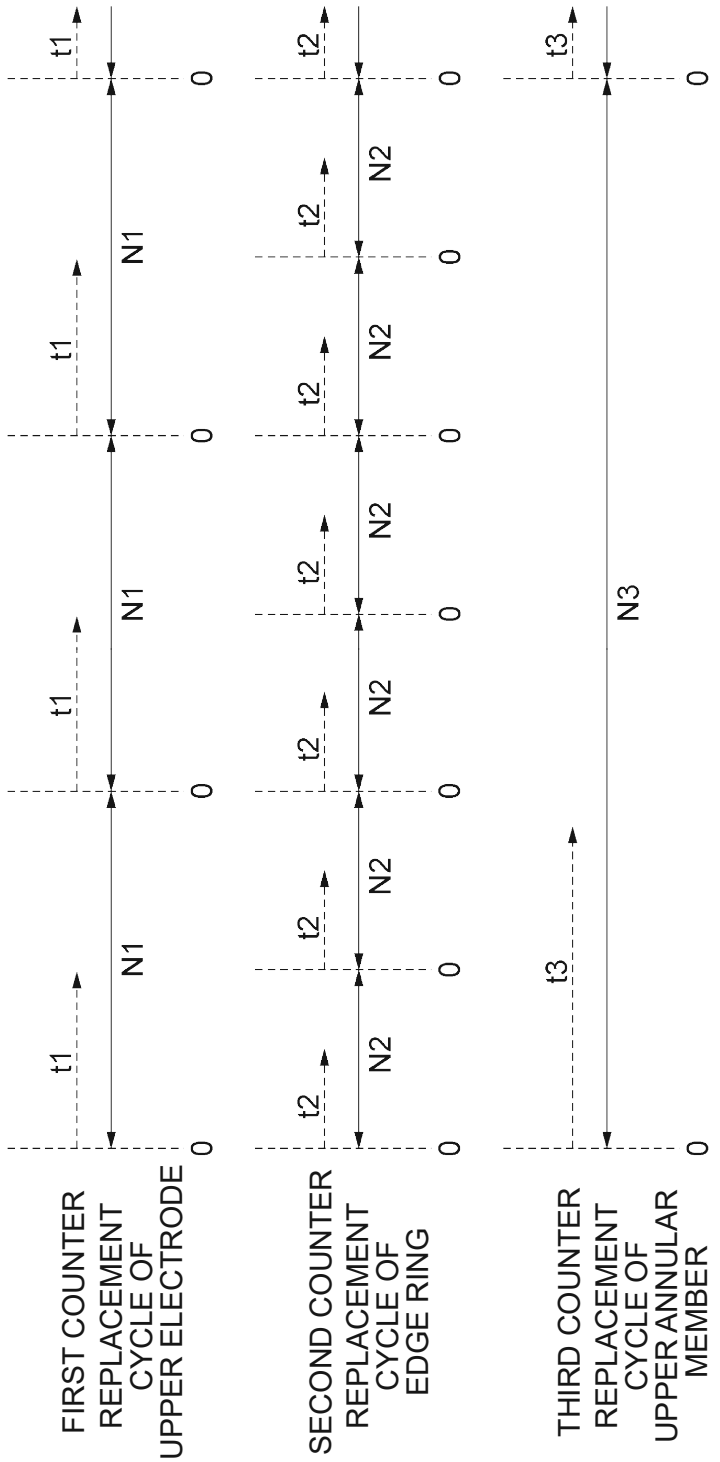
FIRST COUNTER REPLACEMENT CYCLE OF UPPER ELECTRODE
SECOND COUNTER REPLACEMENT CYCLE OF EDGE RING
THIRD COUNTER REPLACEMENT CYCLE OF UPPER ANNULAR MEMBER
t1
t2
t3
N1
N2
N3
0

Fig. 11

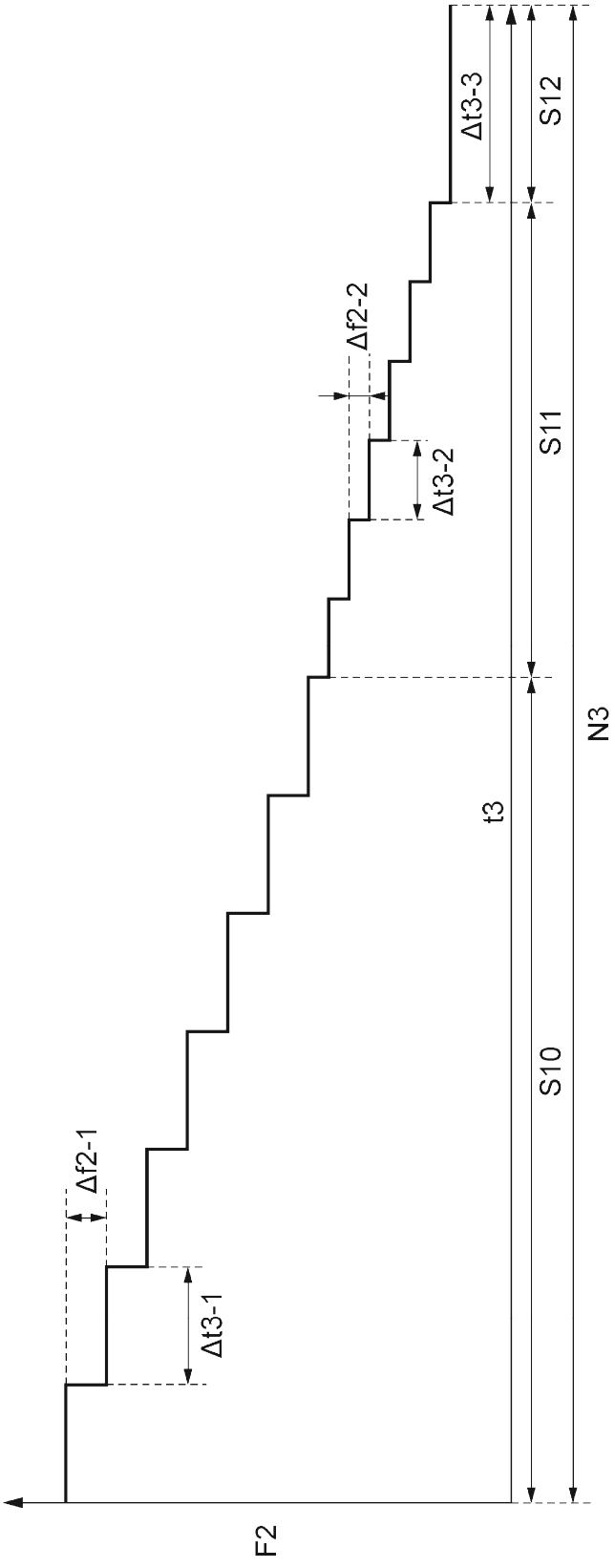

Fig. 12

