(12) INTERNATIONAL APPLICATION PUBLISHED UNDER THE PATENT COOPERATION TREATY (PCT)

(19) World Intellectual Property Organization
International Bureau

(43) International Publication Date
06 September 2024 (06.09.2024)

WIPO | PCT

(10) International Publication Number
WO 2024/180278 A1

(51) International Patent Classification:
E05B 27/00 (2006.01) *E05B 21/06* (2006.01)
E05B 35/00 (2006.01)

(21) International Application Number:
PCT/FI2024/050068

(22) International Filing Date:
27 February 2024 (27.02.2024)

(25) Filing Language: English

(26) Publication Language: English

(30) Priority Data:
20235251 02 March 2023 (02.03.2023) FI

(71) Applicant: **ABLOY OY** [FI/FI]; Wahlforssinkatu 20, 80100 Joensuu (FI).

(72) Inventor: **AITTOKOSKI, Pyry**; Turkkipolku 4B, 80230 Joensuu (FI).

(74) Agent: **BERGGREN OY**; P.O. Box 16, (Eteläinen Rautatiekatu 10 A), 00101 Helsinki (FI).

(81) Designated States *(unless otherwise indicated, for every kind of national protection available)*: AE, AG, AL, AM, AO, AT, AU, AZ, BA, BB, BG, BH, BN, BR, BW, BY, BZ, CA, CH, CL, CN, CO, CR, CU, CV, CZ, DE, DJ, DK, DM, DO, DZ, EC, EE, EG, ES, FI, GB, GD, GE, GH, GM, GT, HN, HR, HU, ID, IL, IN, IQ, IR, IS, IT, JM, JO, JP, KE, KG, KH, KN, KP, KR, KW, KZ, LA, LC, LK, LR, LS, LU, LY, MA, MD, MG, MK, MN, MU, MW, MX, MY, MZ, NA, NG, NI, NO, NZ, OM, PA, PE, PG, PH, PL, PT, QA, RO, RS, RU, RW, SA, SC, SD, SE, SG, SK, SL, ST, SV, SY, TH, TJ, TM, TN, TR, TT, TZ, UA, UG, US, UZ, VC, VN, WS, ZA, ZM, ZW.

(84) Designated States *(unless otherwise indicated, for every kind of regional protection available)*: ARIPO (BW, CV, GH, GM, KE, LR, LS, MW, MZ, NA, RW, SC, SD, SL, ST, SZ, TZ, UG, ZM, ZW), Eurasian (AM, AZ, BY, KG, KZ, RU, TJ, TM), European (AL, AT, BE, BG, CH, CY, CZ, DE, DK, EE, ES, FI, FR, GB, GR, HR, HU, IE, IS, IT, LT, LU, LV, MC, ME, MK, MT, NL, NO, PL, PT, RO, RS, SE, SI, SK, SM, TR), OAPI (BF, BJ, CF, CG, CI, CM, GA, GN, GQ, GW, KM, ML, MR, NE, SN, TD, TG).

Published:
— *with international search report (Art. 21(3))*
— *before the expiration of the time limit for amending the claims and to be republished in the event of receipt of amendments (Rule 48.2(h))*
— *in black and white; the international application as filed contained color or greyscale and is available for download from PATENTSCOPE*

(54) Title: CYLINDER LOCK AND KEY COMBINATION

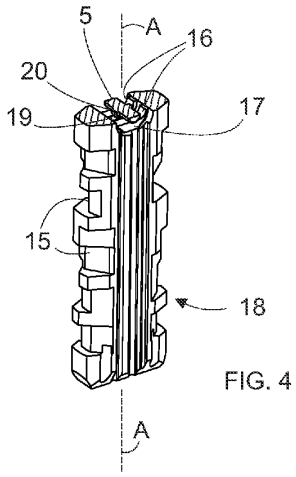

FIG. 4

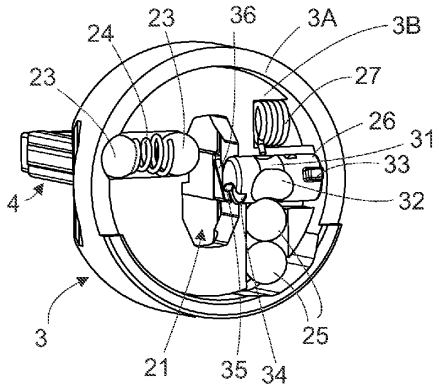

FIG. 7

(57) Abstract: The invention relates to a combination of a cylinder lock and a key. The cylinder lock (1) comprises an inner structure arrange- ment. It has a key profile opening (21). The key (2) comprises a moveable element (5). The key (2) comprises a slot (16), which is transverse in relation to a longitudinal axis of a shaft of the key (2) and also through the shaft of the key. The moveable element (5) is arranged to move along the slot (16).

WO 2024/180278 A1