FIG. 1

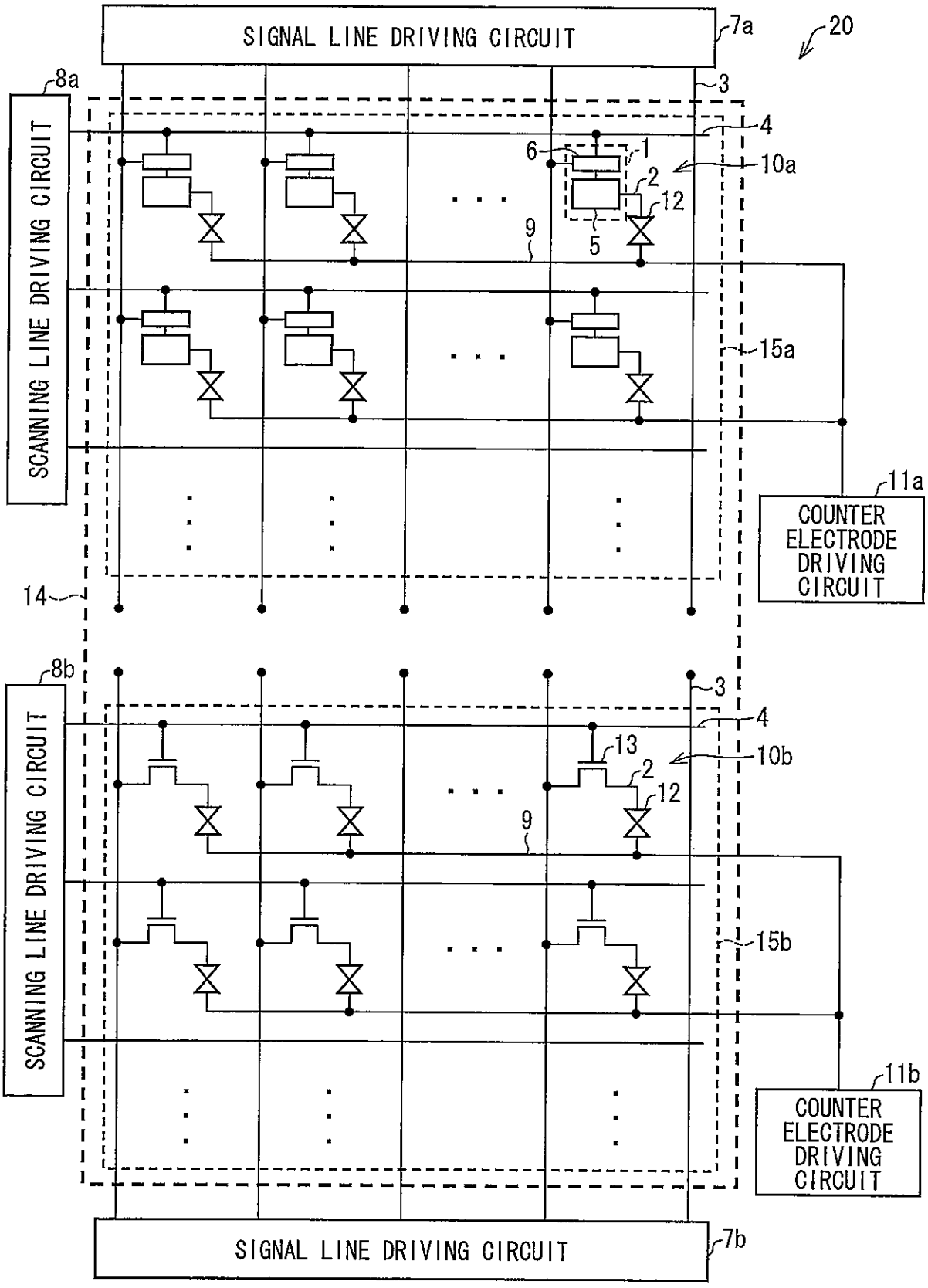
SIGNAL LINE DRIVING CIRCUIT
7a
20
8a
SCANNING LINE DRIVING CIRCUIT
3
4
6
1
10a
2
12
9
5
15a
11a
COUNTER ELECTRODE DRIVING CIRCUIT
14
8b
SCANNING LINE DRIVING CIRCUIT
3
4
13
10b
2
12
9
15b
11b
COUNTER ELECTRODE DRIVING CIRCUIT
SIGNAL LINE DRIVING CIRCUIT
7b

FIG. 2

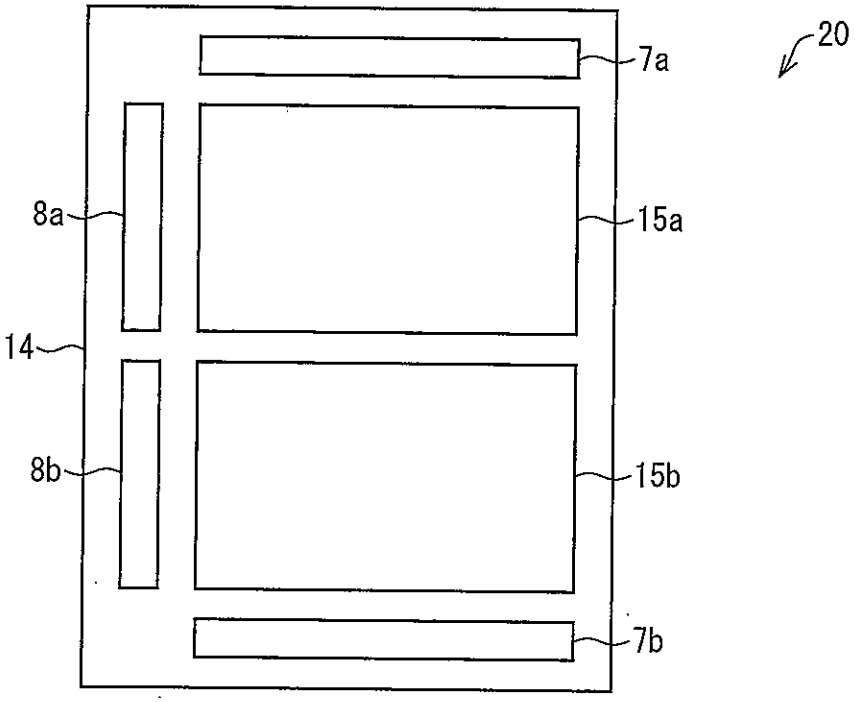
20
7a
8a
15a
14
8b
15b
7b

FIG. 3

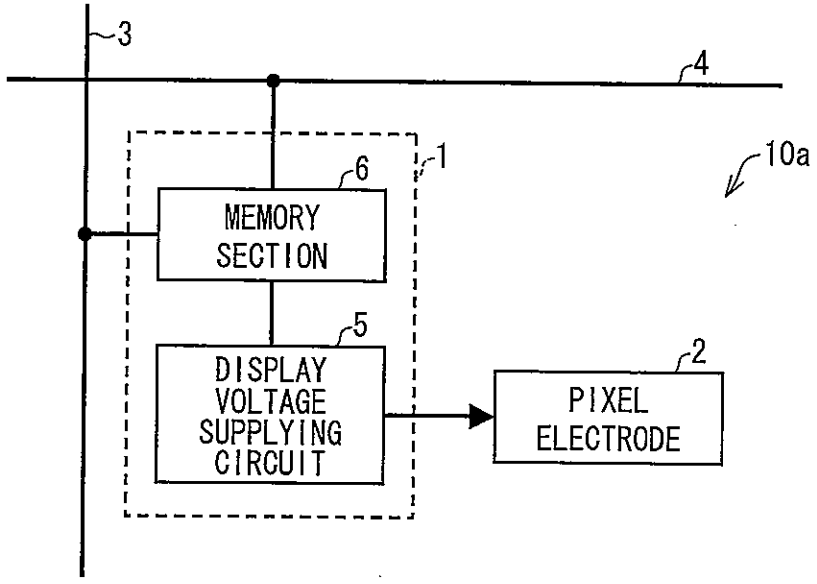
3
4
10a
1
6
MEMORY SECTION
5
DISPLAY VOLTAGE SUPPLYING CIRCUIT
2
PIXEL ELECTRODE

FIG. 4

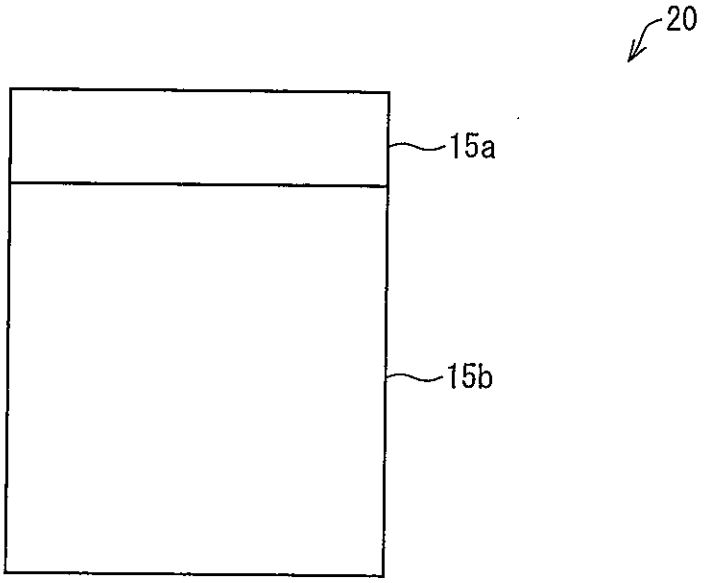

FIG. 5

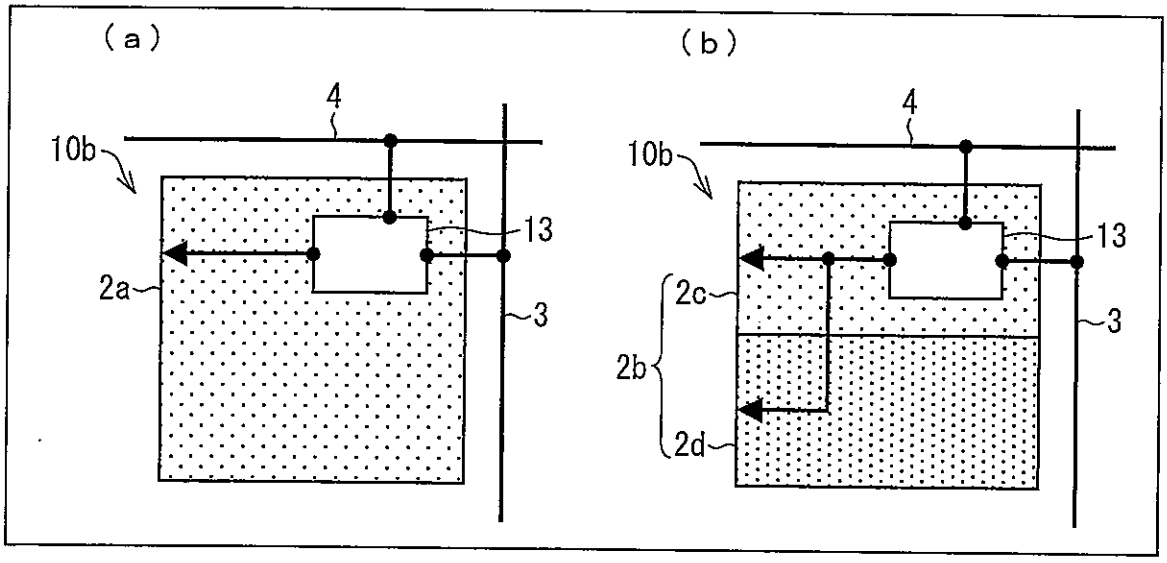

FIG. 6

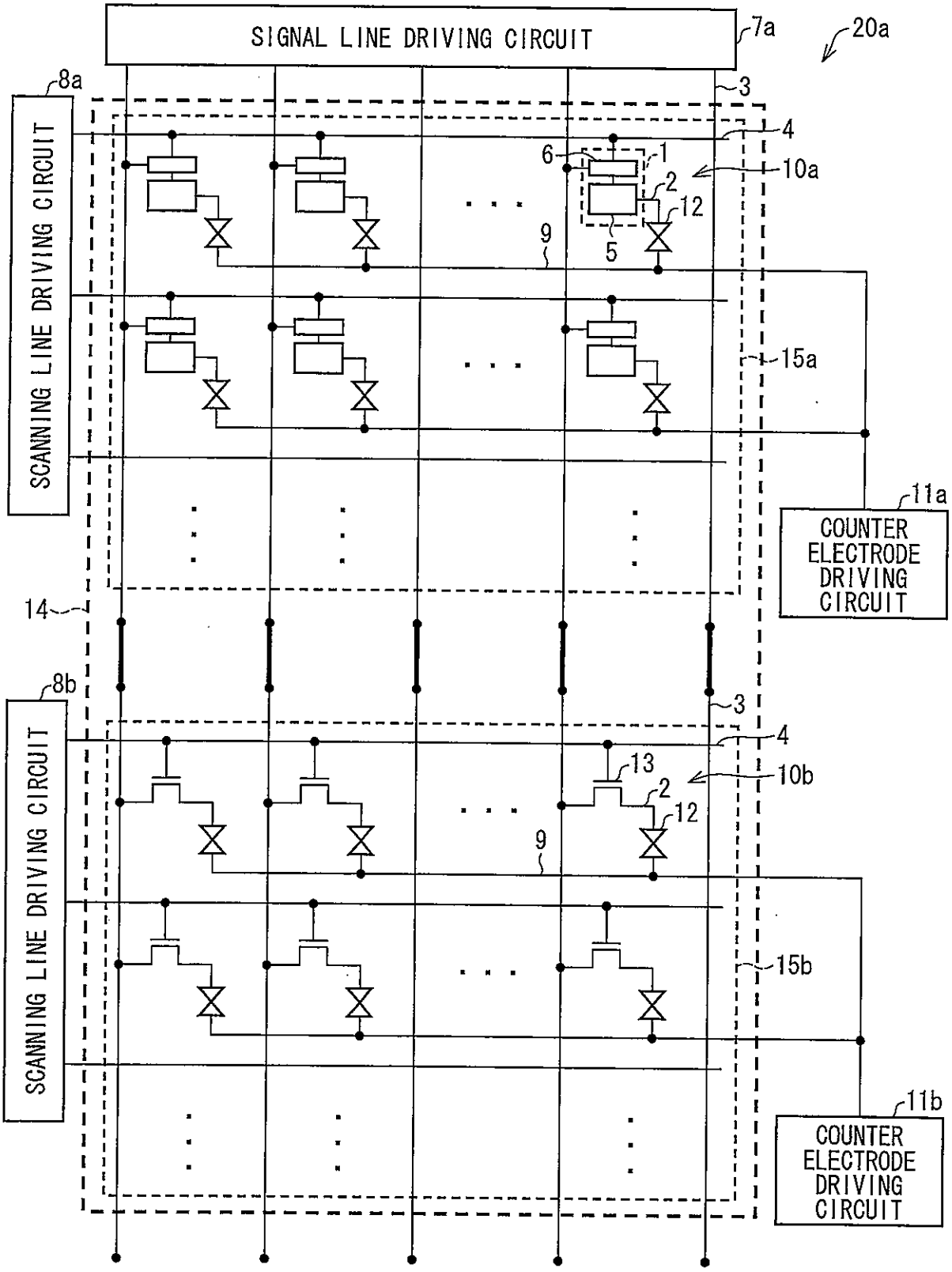
SIGNAL LINE DRIVING CIRCUIT
7a
20a
8a
SCANNING LINE DRIVING CIRCUIT
3
4
6
1
10a
2
12
9
5
15a
11a
COUNTER ELECTRODE DRIVING CIRCUIT
14
8b
SCANNING LINE DRIVING CIRCUIT
3
4
13
10b
2
12
9
15b
11b
COUNTER ELECTRODE DRIVING CIRCUIT

FIG. 7

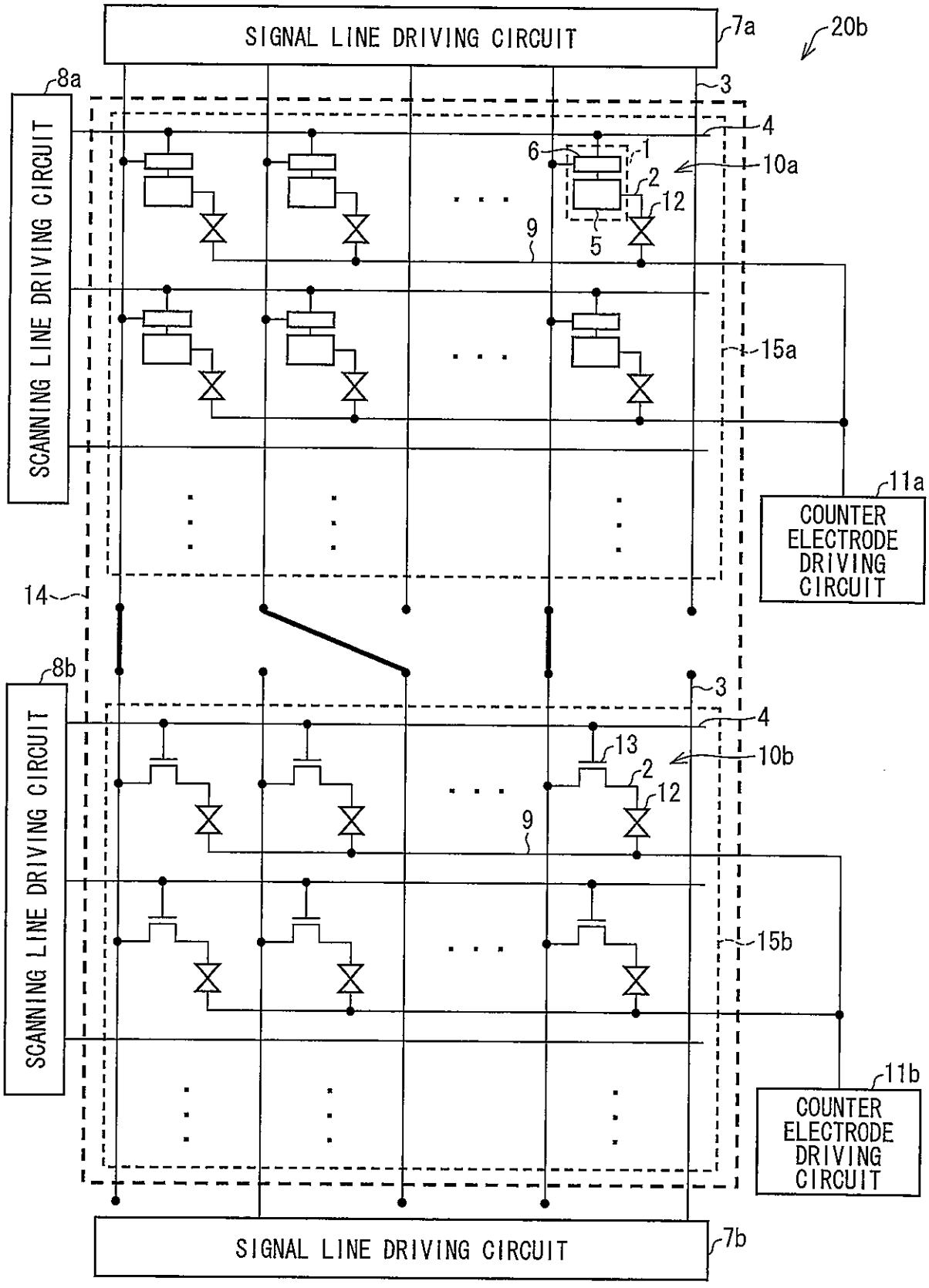
SIGNAL LINE DRIVING CIRCUIT
7a
20b
8a
SCANNING LINE DRIVING CIRCUIT
3
4
6
1
10a
2
12
9
5
15a
11a
COUNTER ELECTRODE DRIVING CIRCUIT
14
8b
SCANNING LINE DRIVING CIRCUIT
3
4
13
10b
2
12
9
15b
11b
COUNTER ELECTRODE DRIVING CIRCUIT
SIGNAL LINE DRIVING CIRCUIT
7b

FIG. 8

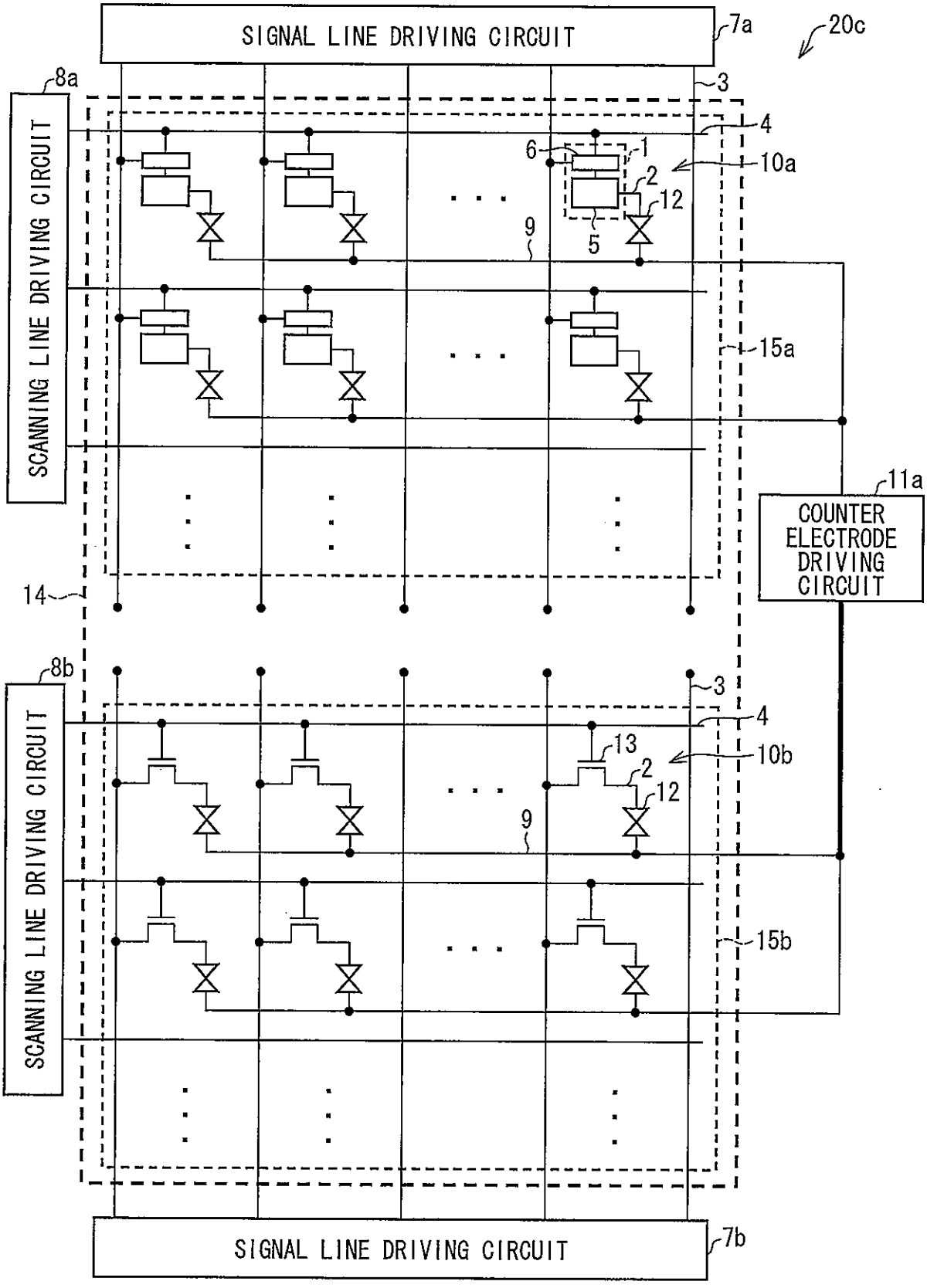
SIGNAL LINE DRIVING CIRCUIT
7a
20c
8a
SCANNING LINE DRIVING CIRCUIT
3
4
6
1
10a
2
12
9
5
15a
11a
COUNTER ELECTRODE DRIVING CIRCUIT
14
8b
SCANNING LINE DRIVING CIRCUIT
3
4
13
10b
2
12
9
15b
SIGNAL LINE DRIVING CIRCUIT
7b

FIG. 9

