Fig. 1

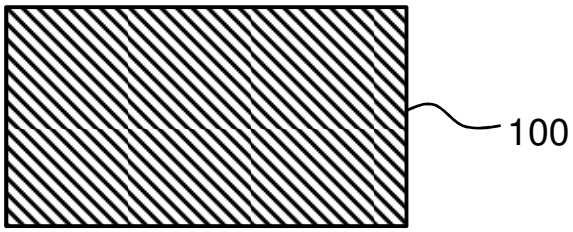

(a)

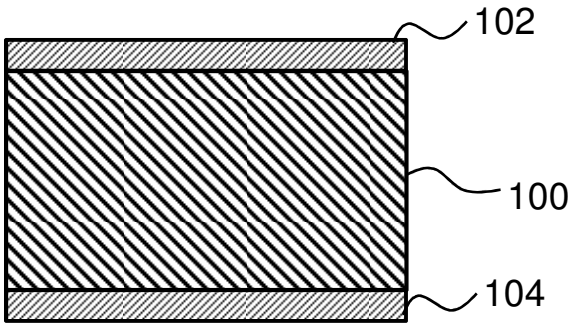

(b)

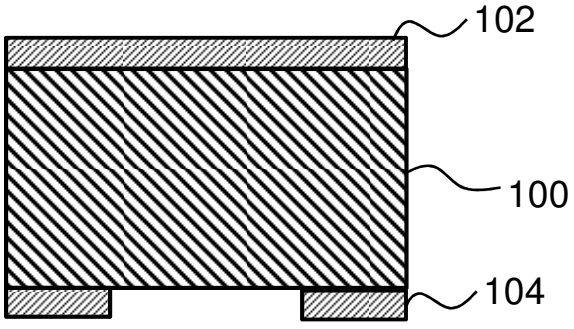

(c)

Fig. 2

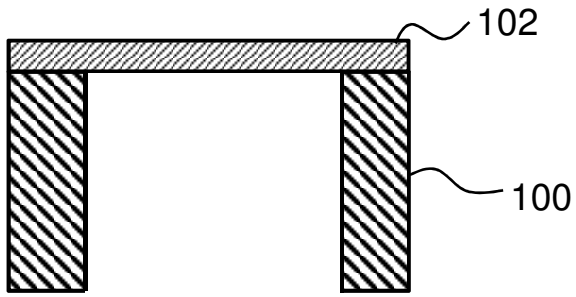

(a)

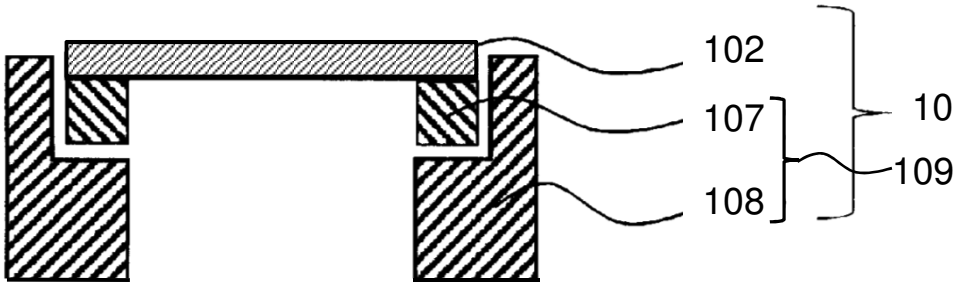

(b)

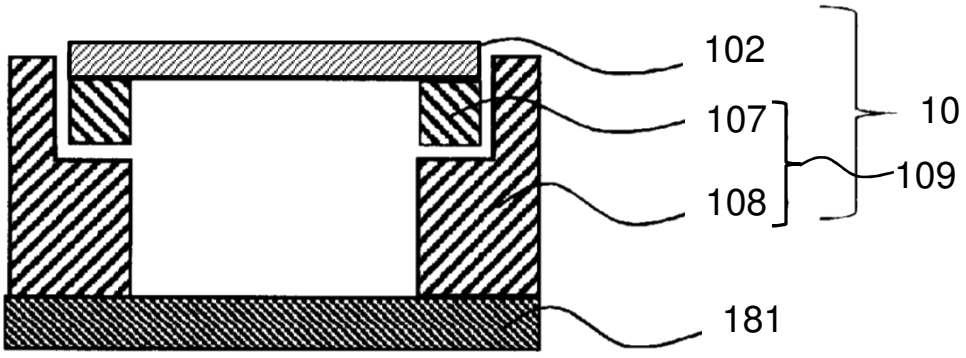

(c)

Fig. 3

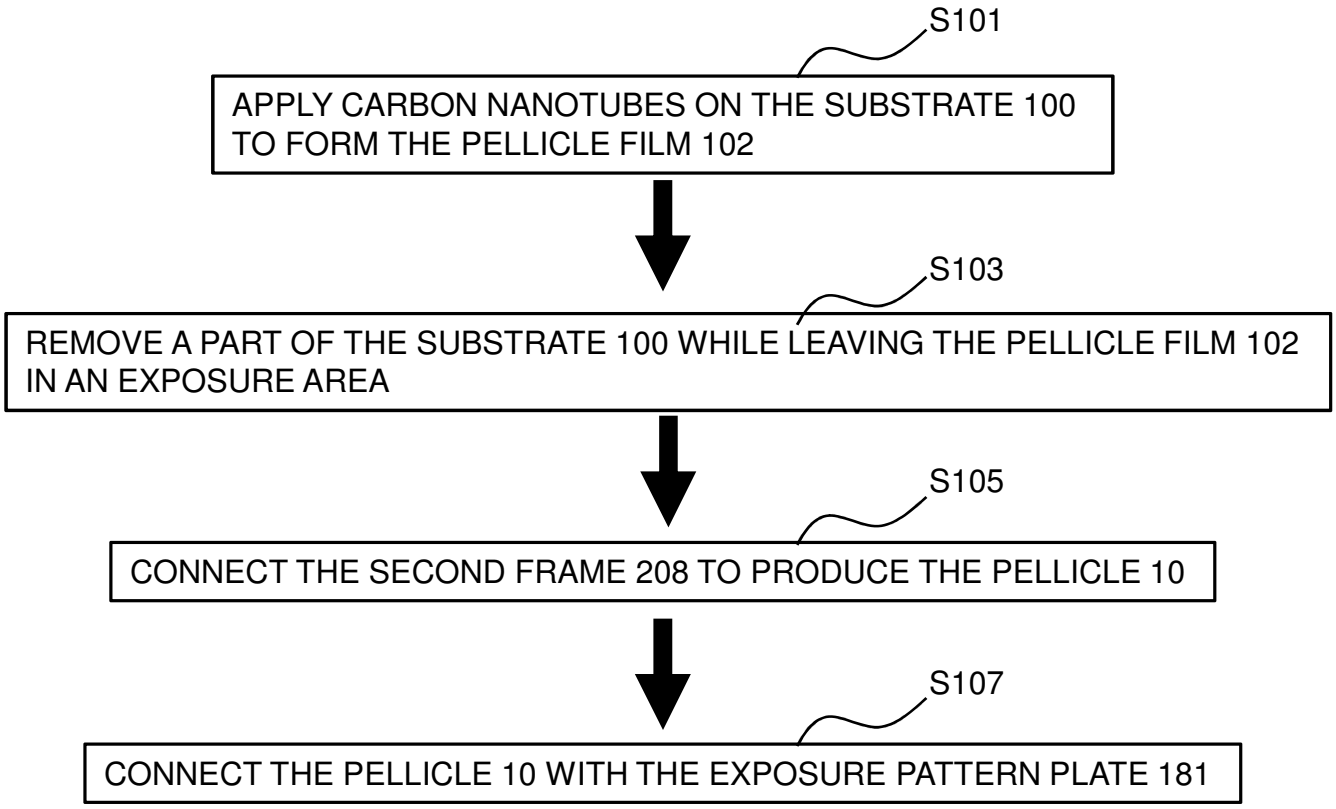
S101
APPLY CARBON NANOTUBES ON THE SUBSTRATE 100 TO FORM THE PELLICLE FILM 102
S103
REMOVE A PART OF THE SUBSTRATE 100 WHILE LEAVING THE PELLICLE FILM 102 IN AN EXPOSURE AREA
S105
CONNECT THE SECOND FRAME 208 TO PRODUCE THE PELLICLE 10
S107
CONNECT THE PELLICLE 10 WITH THE EXPOSURE PATTERN PLATE 181

Fig. 4

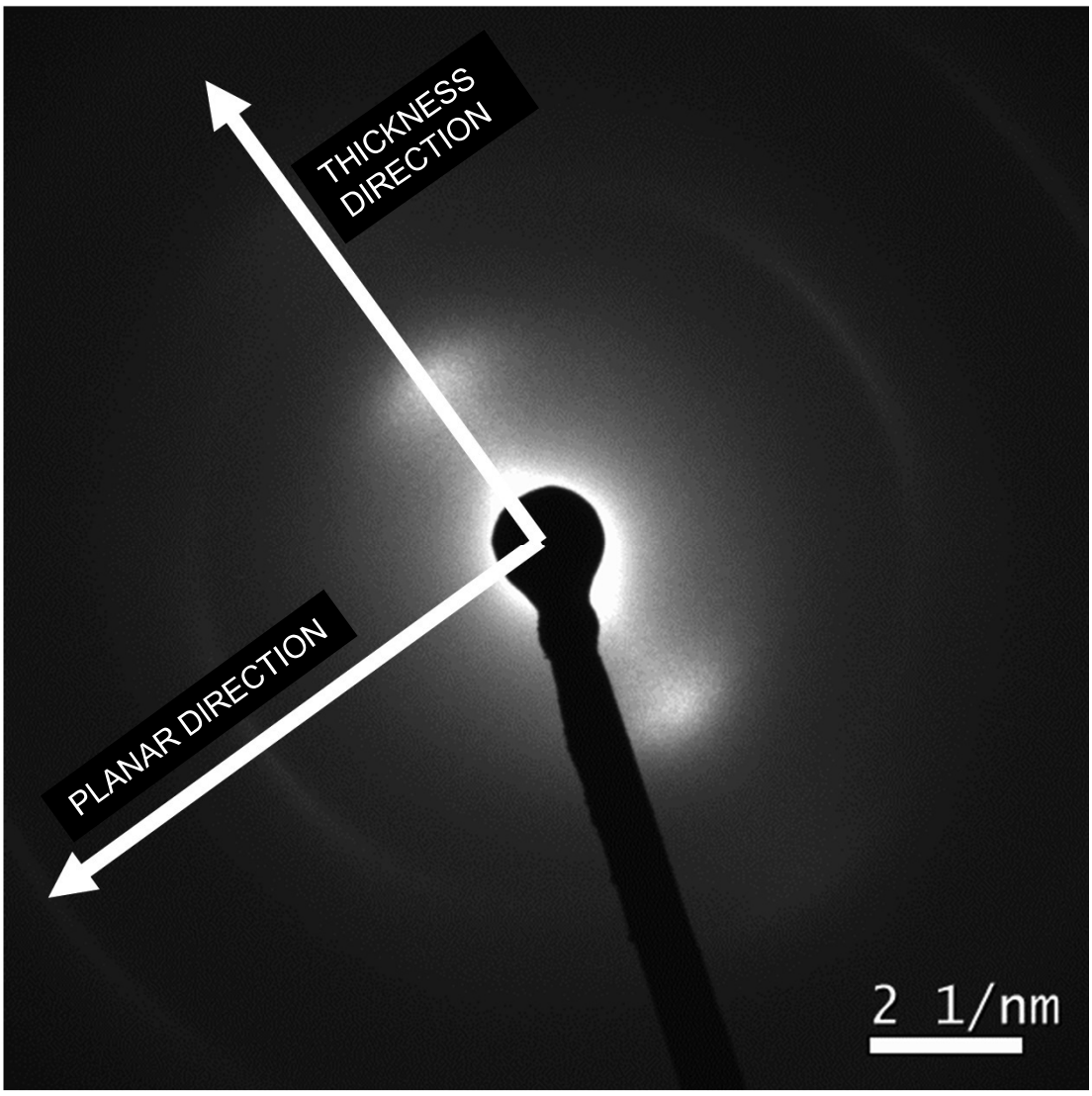

Fig. 5

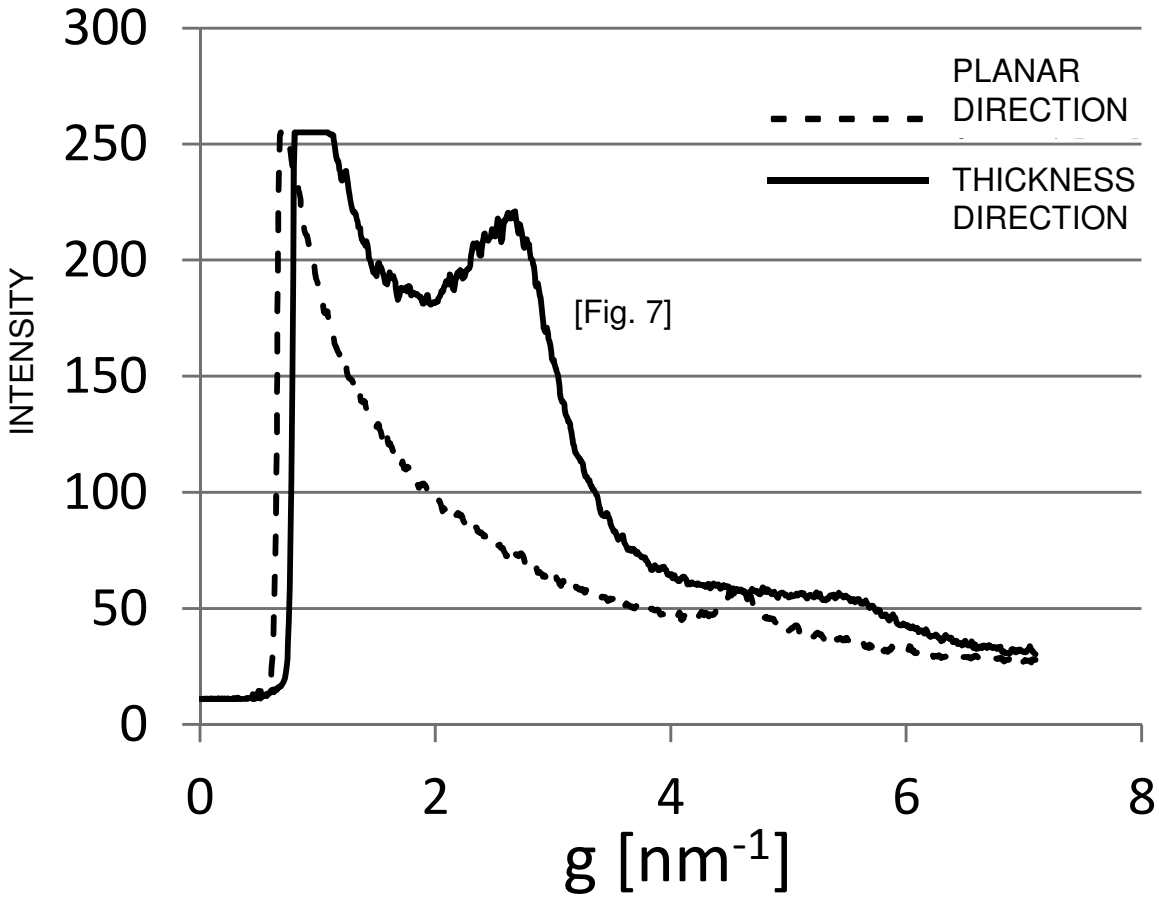
300
250
200
150
100
50
0
INTENSITY
0
2
4
6
8
g [nm-1]
PLANAR DIRECTION
THICKNESS DIRECTION
[Fig. 7]

Fig. 6

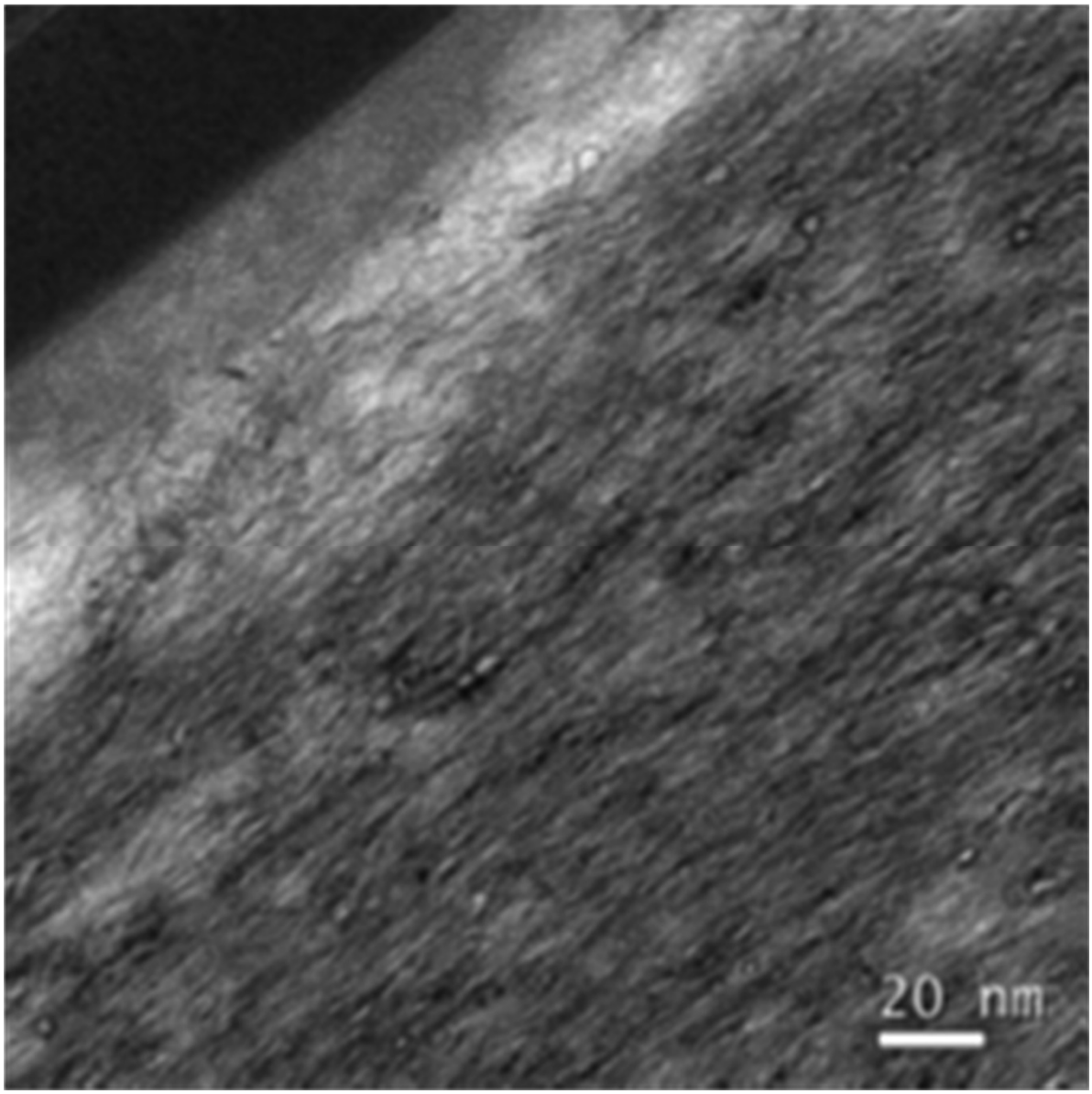

Fig. 7

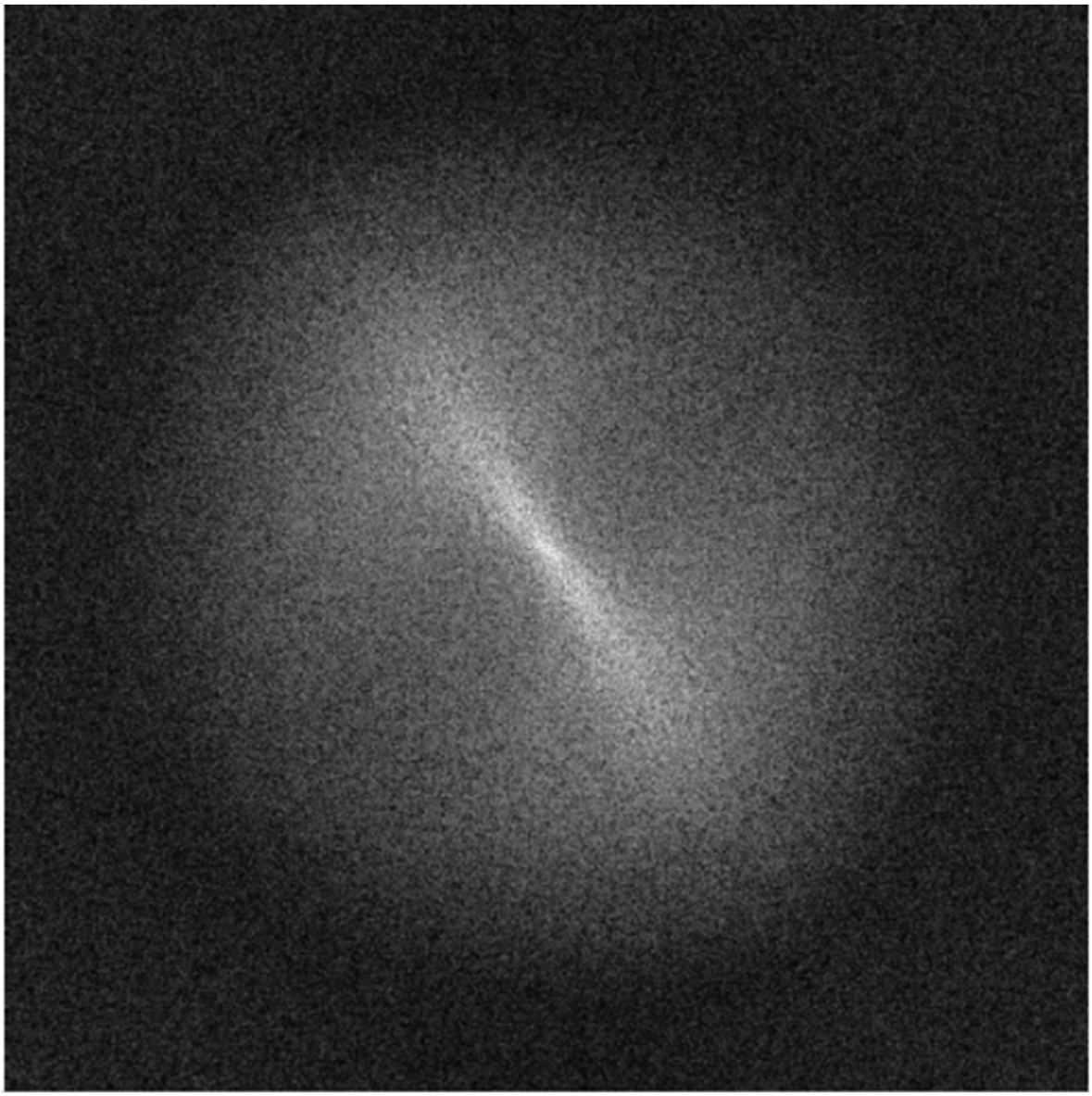

Fig. 8

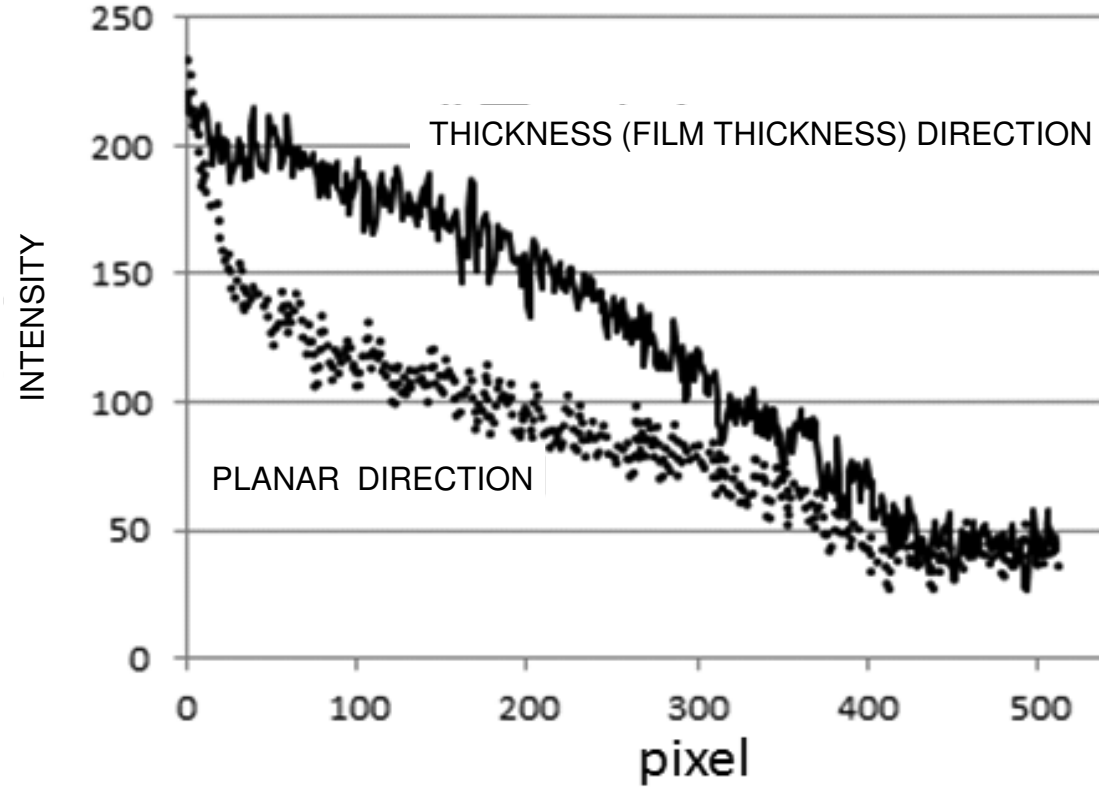
250
200
150
100
50
0
INTENSITY
THICKNESS (FILM THICKNESS) DIRECTION
PLANAR DIRECTION
0
100
200
300
400
500
pixel

Fig. 9

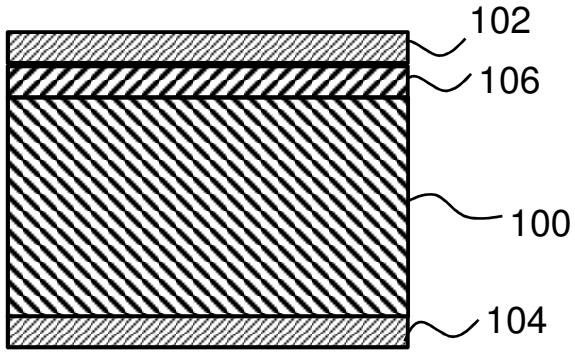

(a)

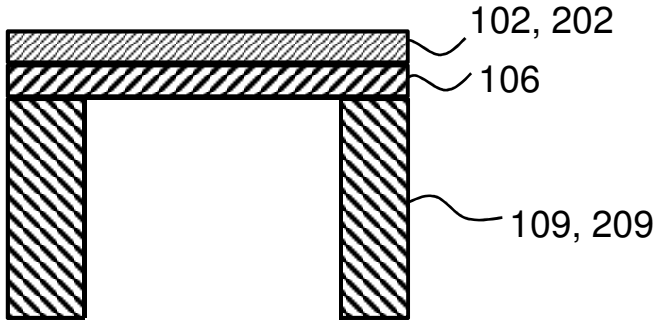

(b)

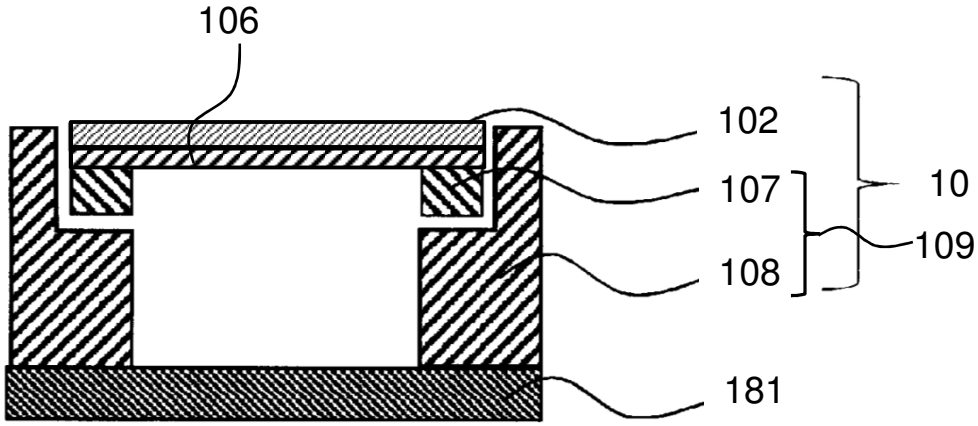

(c)

Fig. 10

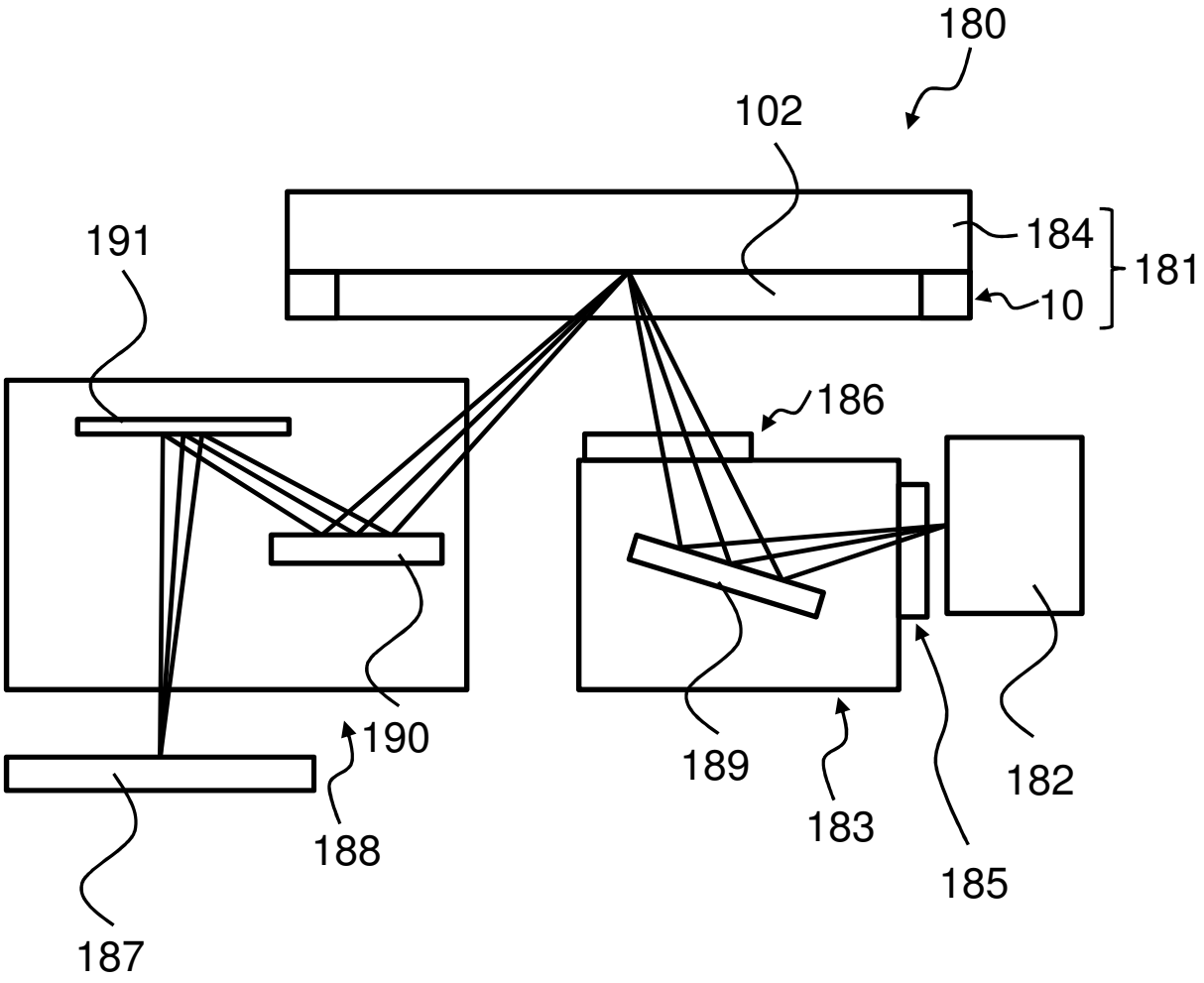

Fig. 11

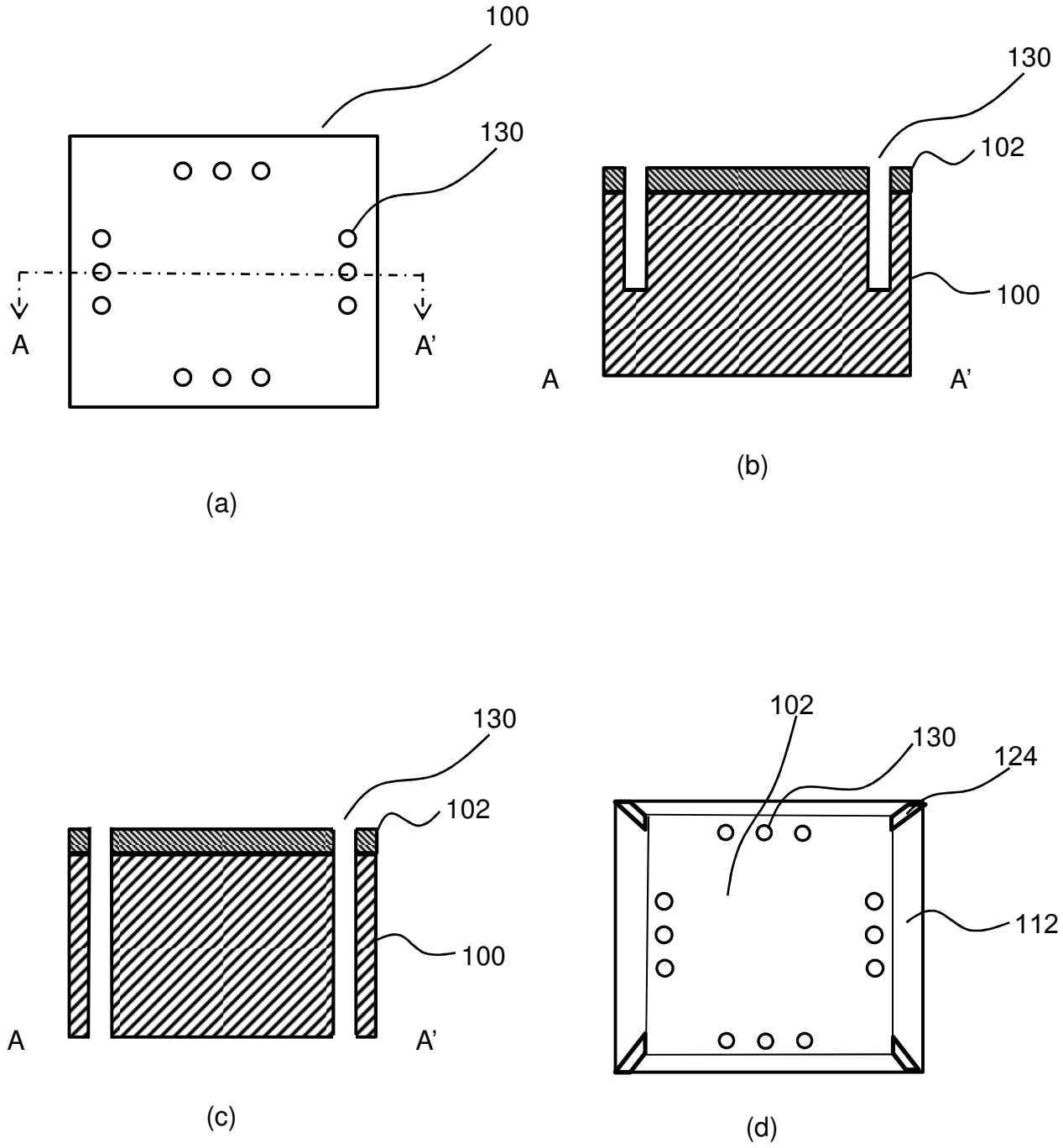

Fig. 12

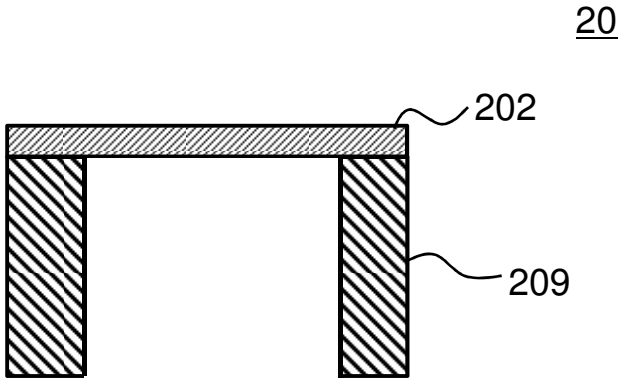

Fig. 13

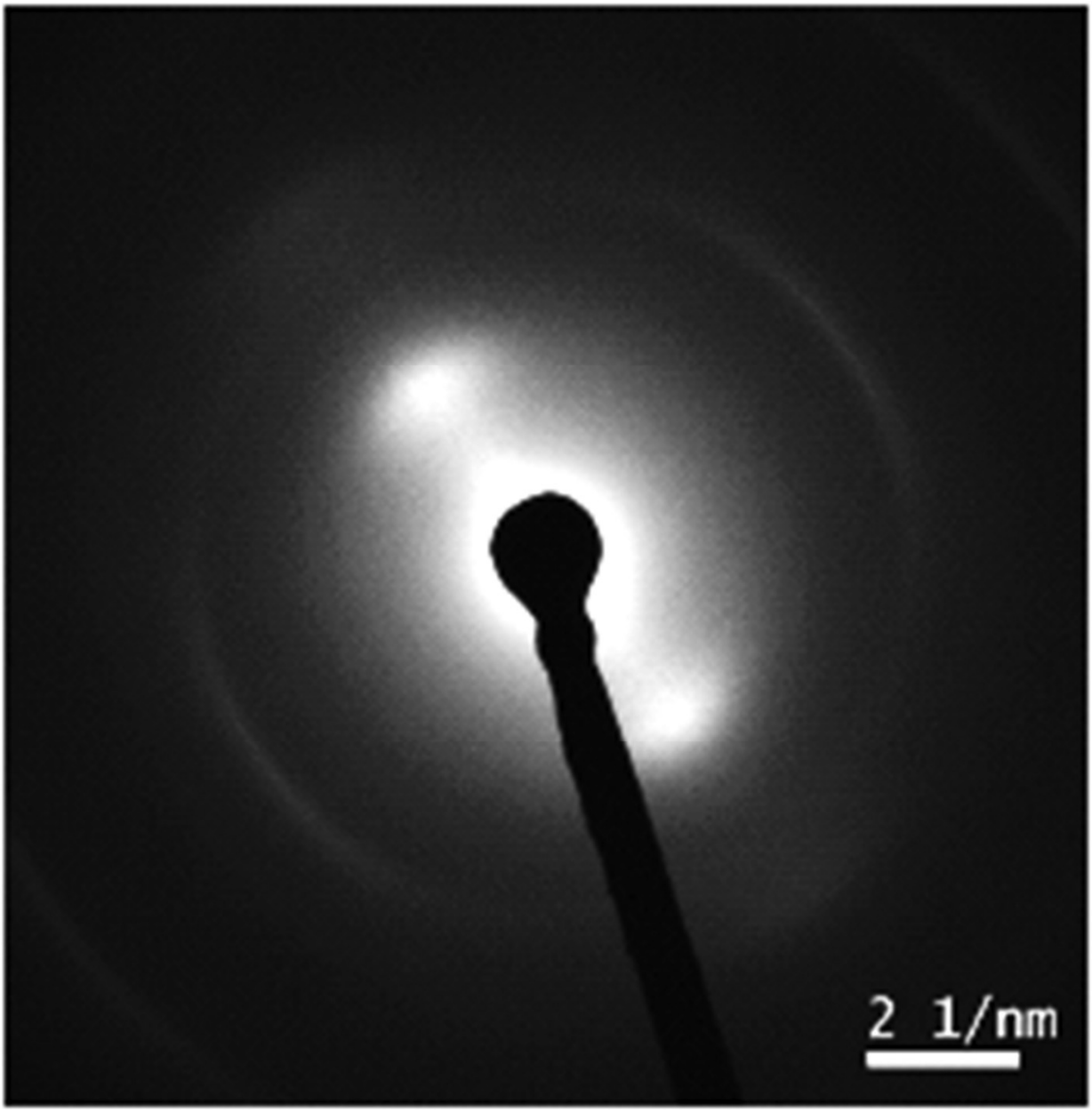

Fig. 14

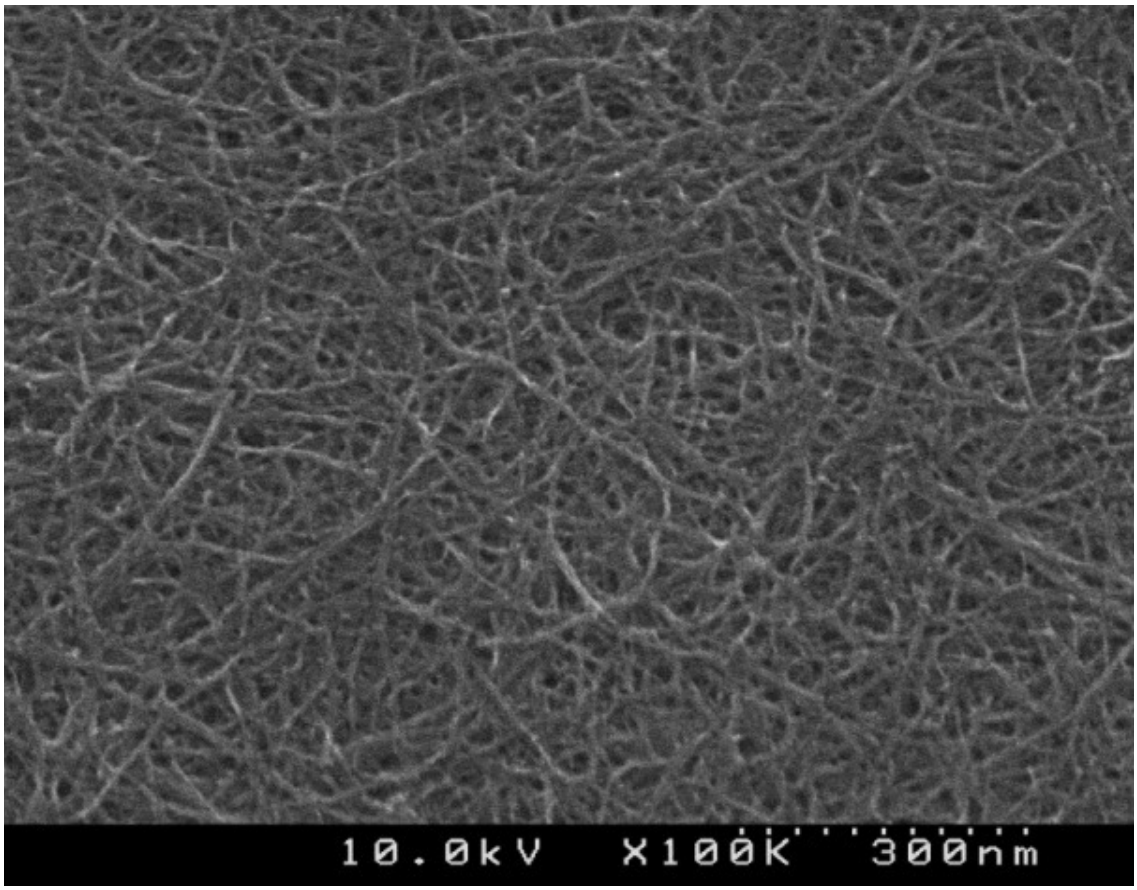

Fig. 15

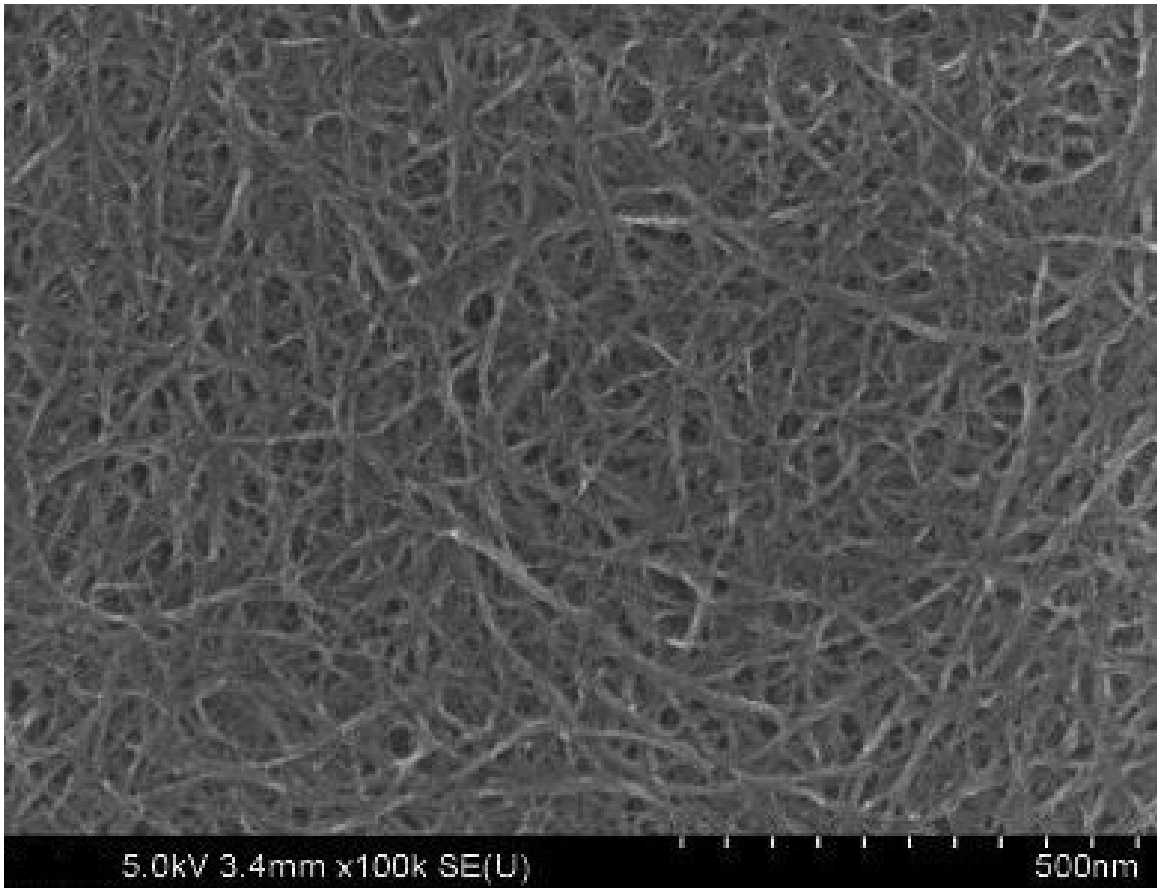

Fig. 16

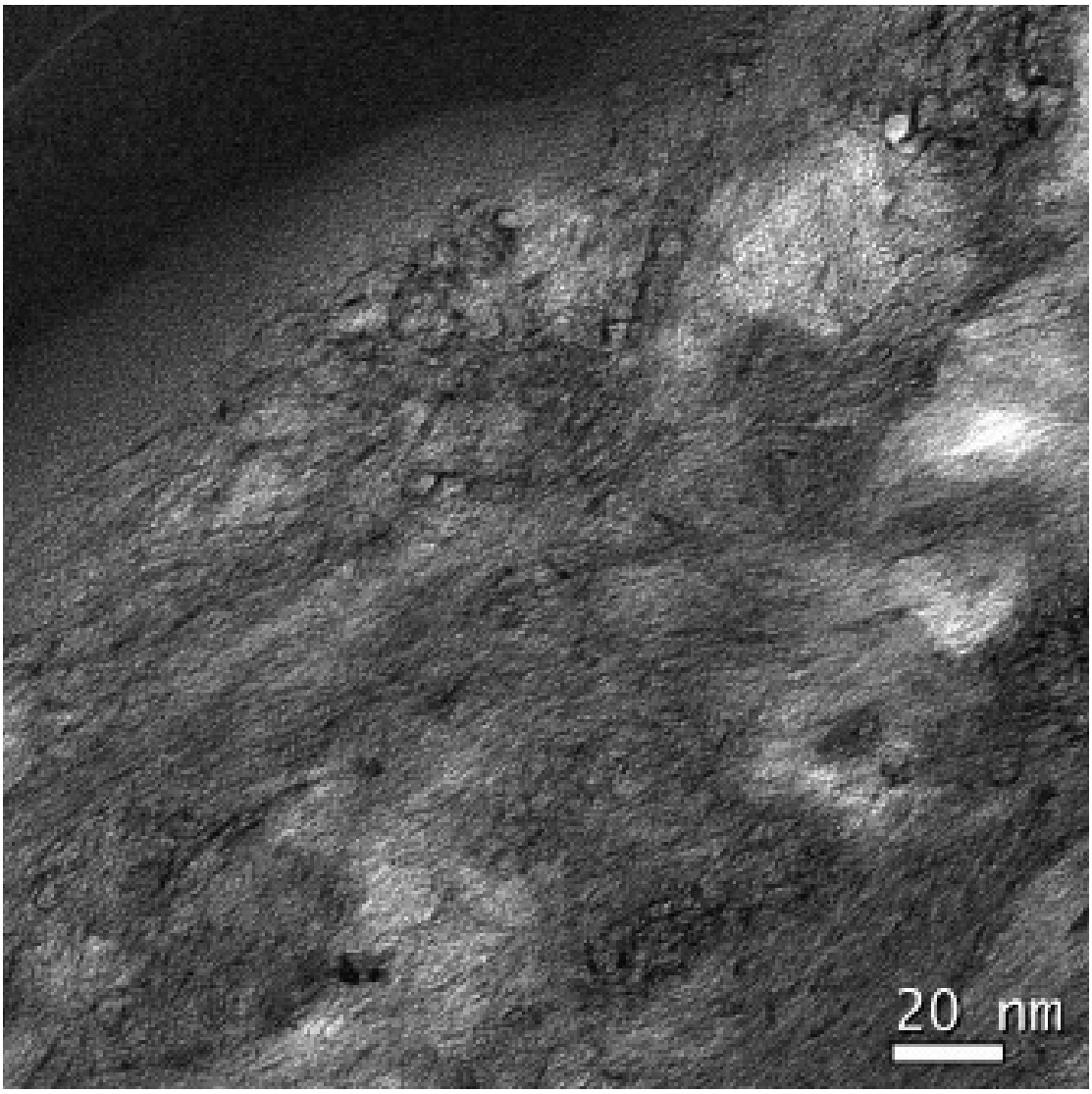

Fig. 17

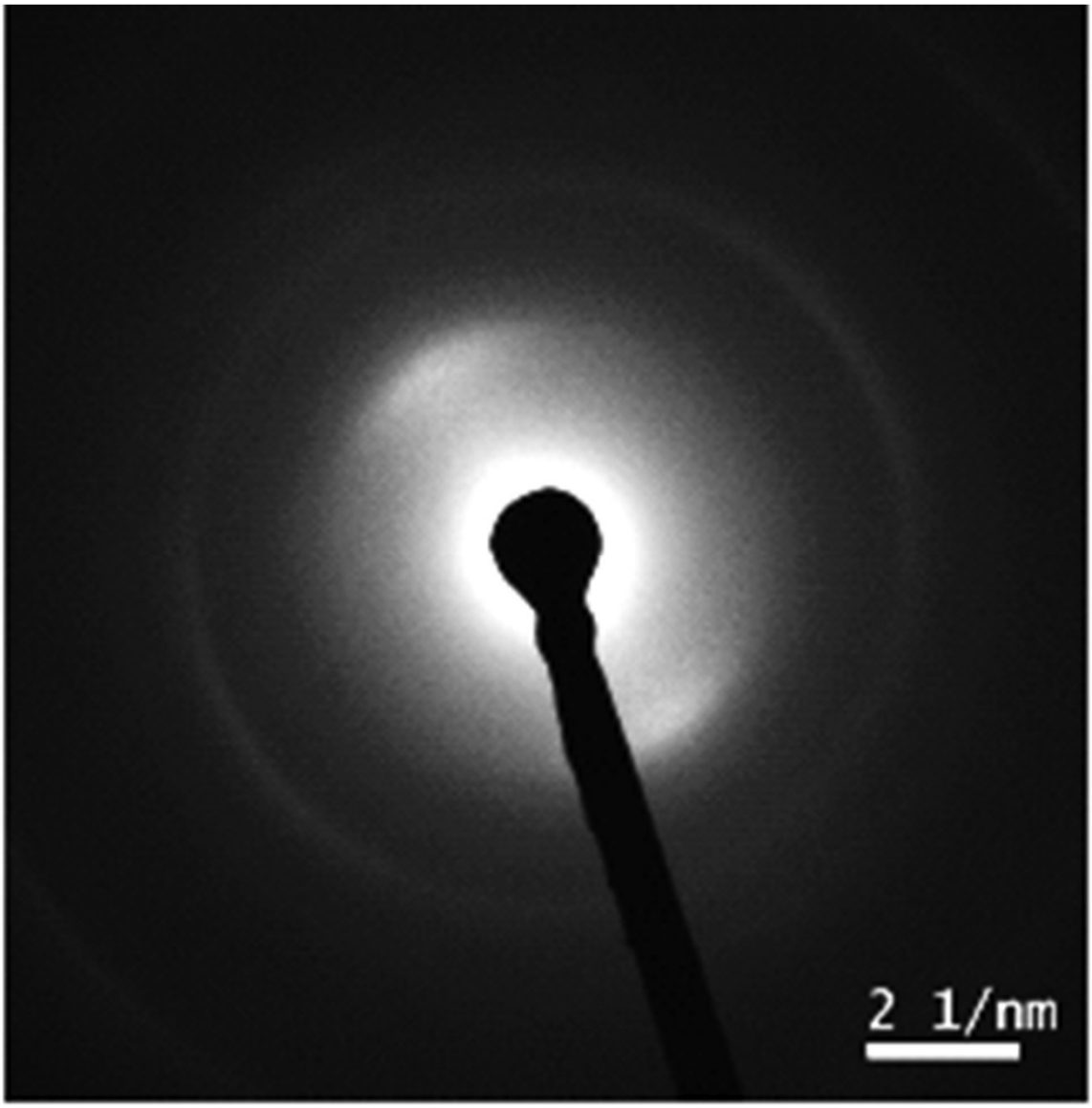

Fig. 18

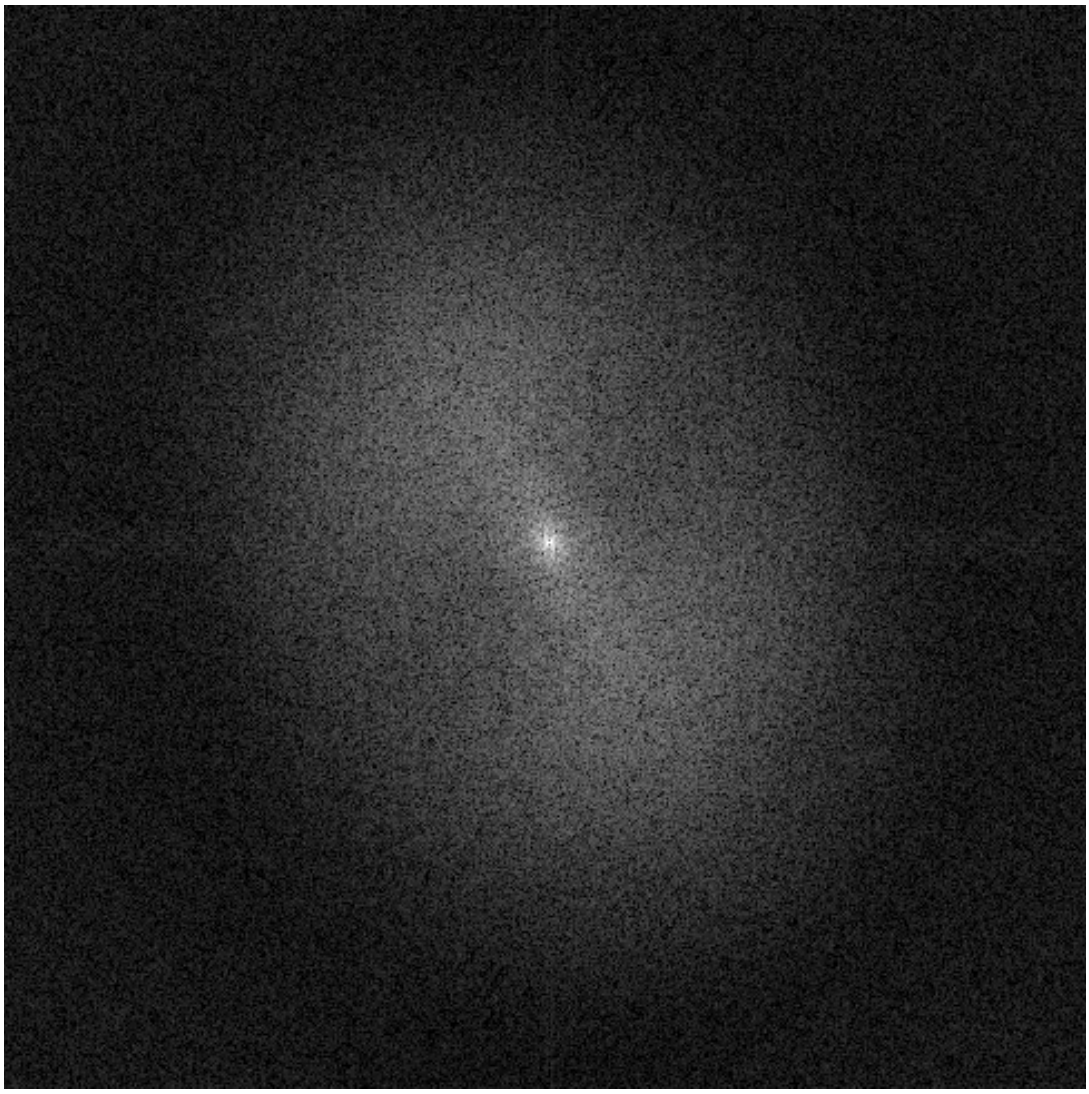

Fig. 19

