[FIG. 1]

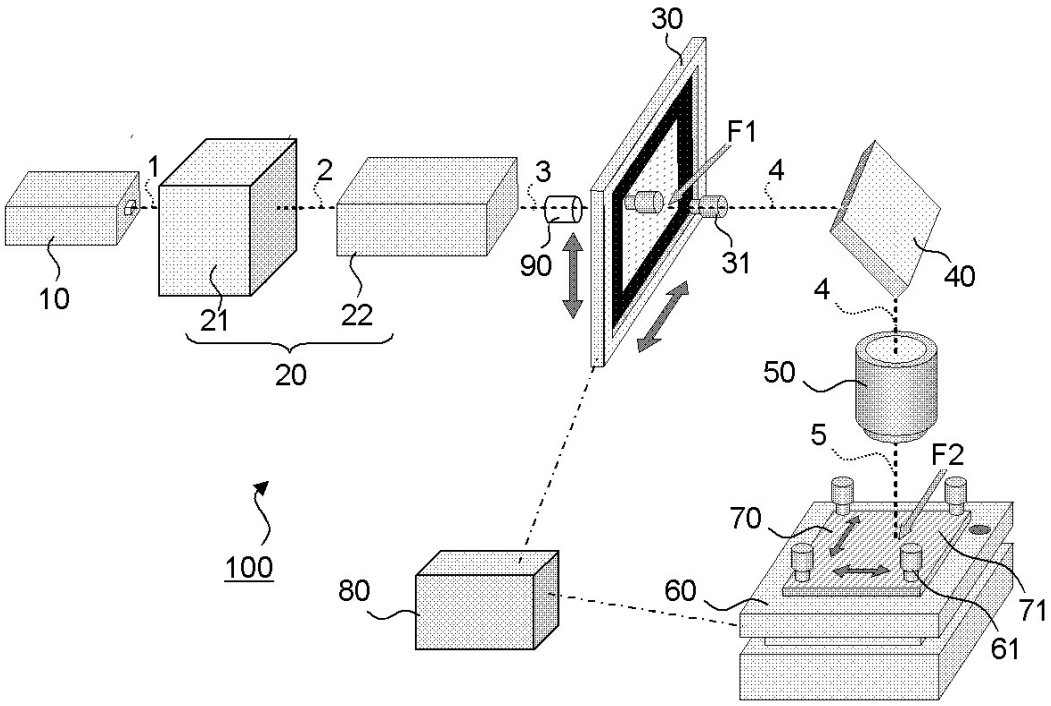
30
F1
1
2
3
4
10
21
22
90
31
40
20
4
50
5
F2
70
100
80
60
71
61

[FIG. 2]

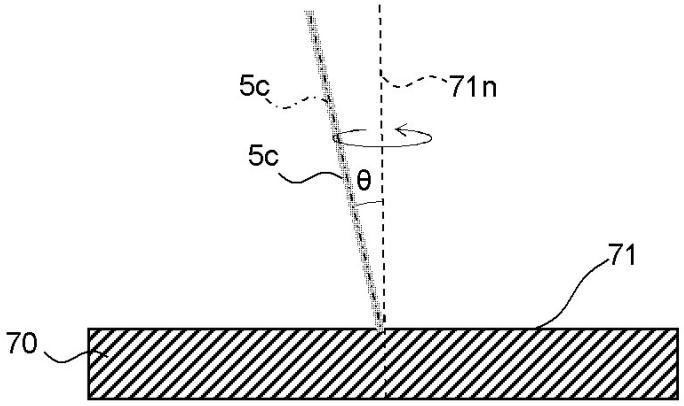
5c
71n
5c
θ
71
70

[FIG. 3]

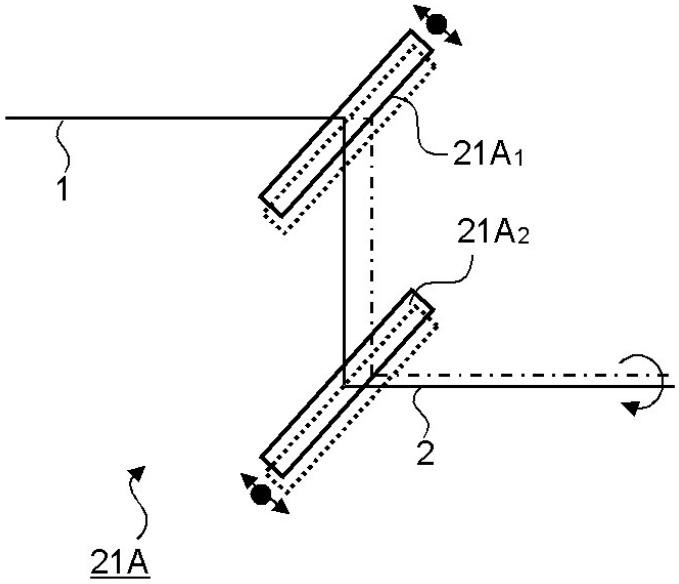

[FIG. 4]

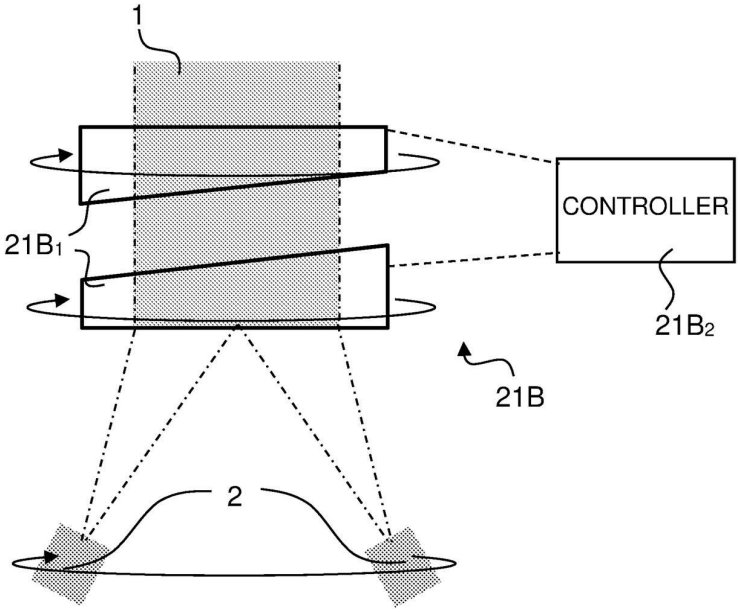

[FIG. 5]

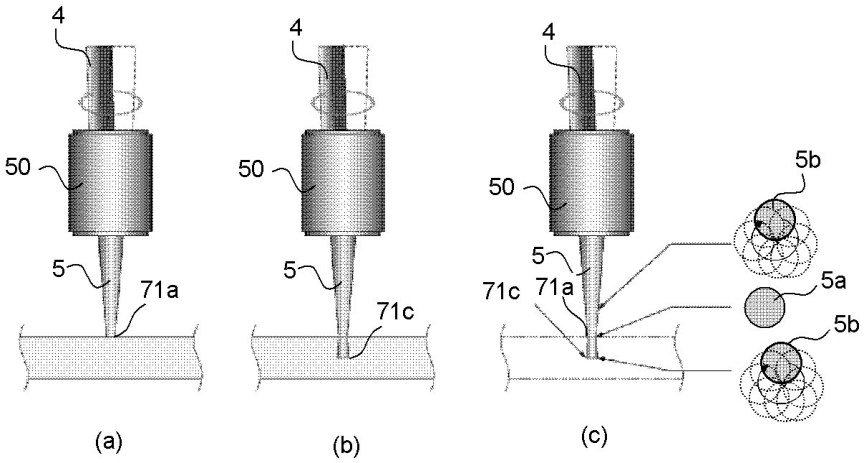
4
50
5
71a
(a)
4
50
5
71c
(b)
4
50
5
71c
71a
5b
5a
5b
(c)

[FIG. 6]

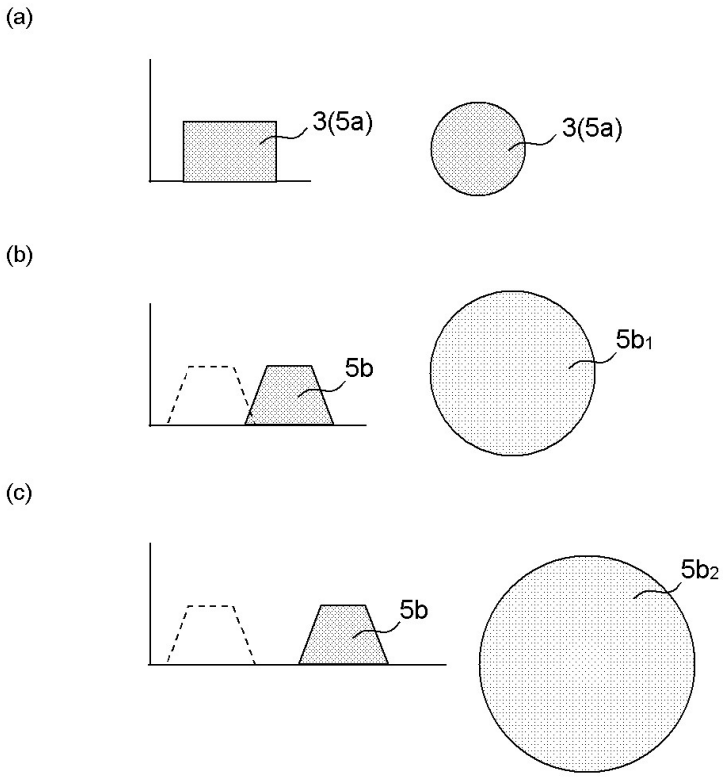
(a)
3(5a)
3(5a)
(b)
5b
5b1
(c)
5b
5b2

[FIG. 7]

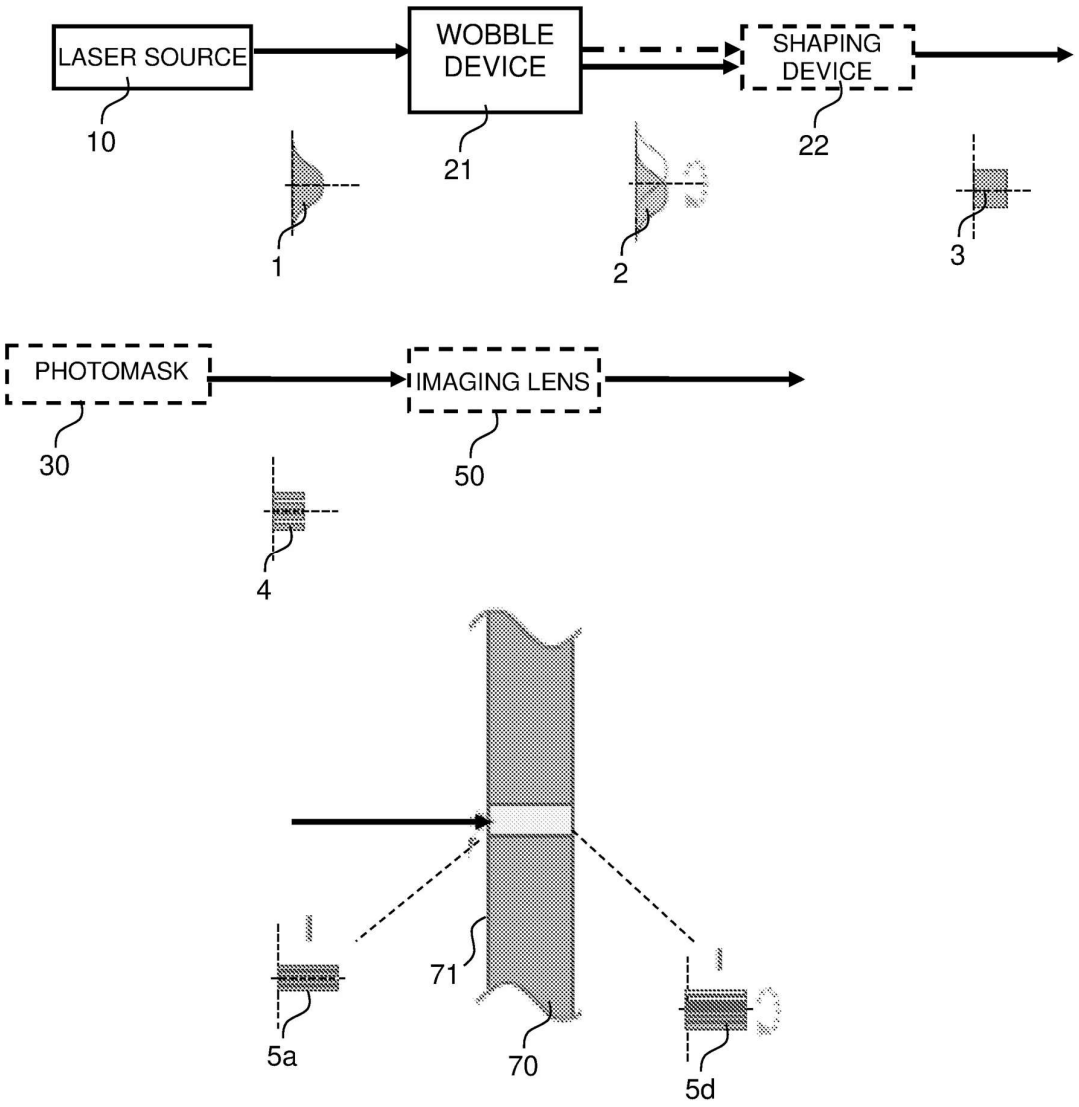
LASER SOURCE
10
WOBBLE DEVICE
21
SHAPING DEVICE
22
1
2
3
PHOTOMASK
30
IMAGING LENS
50
4
71
5a
70
5d

[FIG. 8]

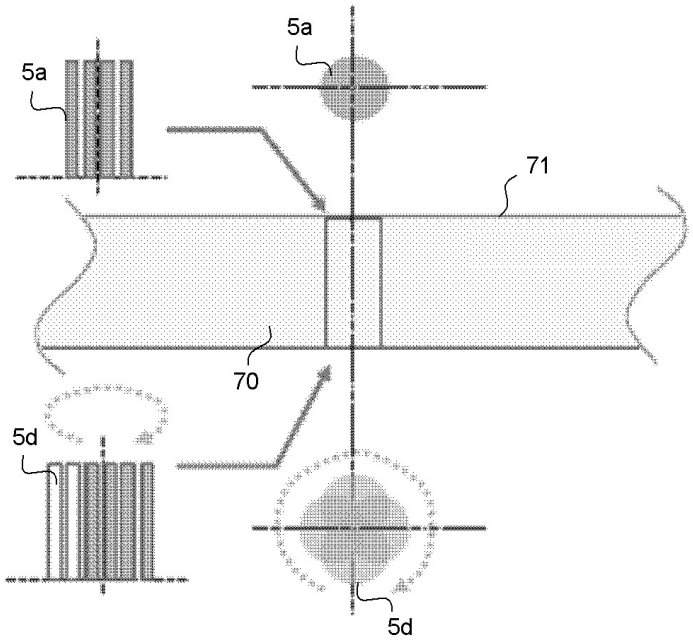

[FIG. 9]

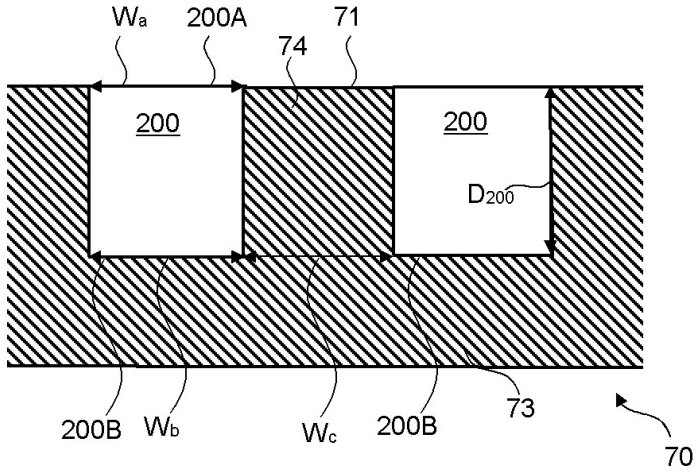

[FIG. 10]

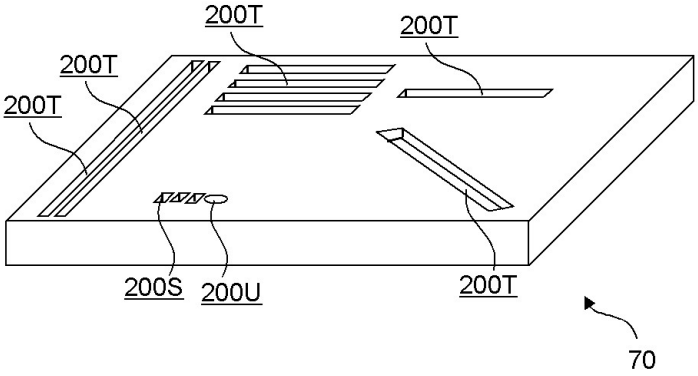

[FIG. 11]

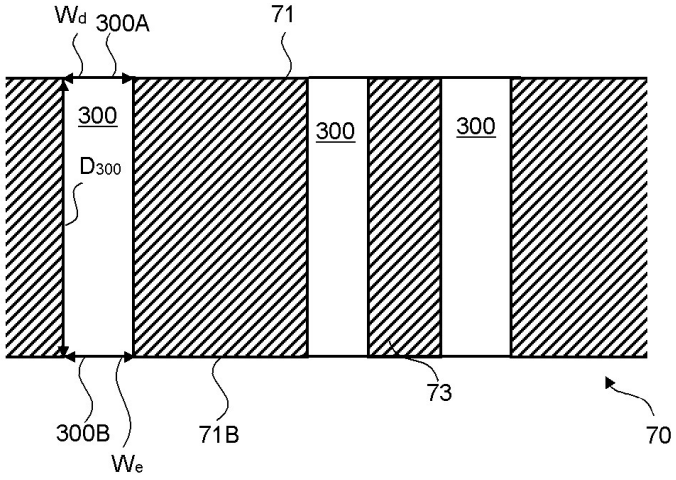

[FIG. 12]

