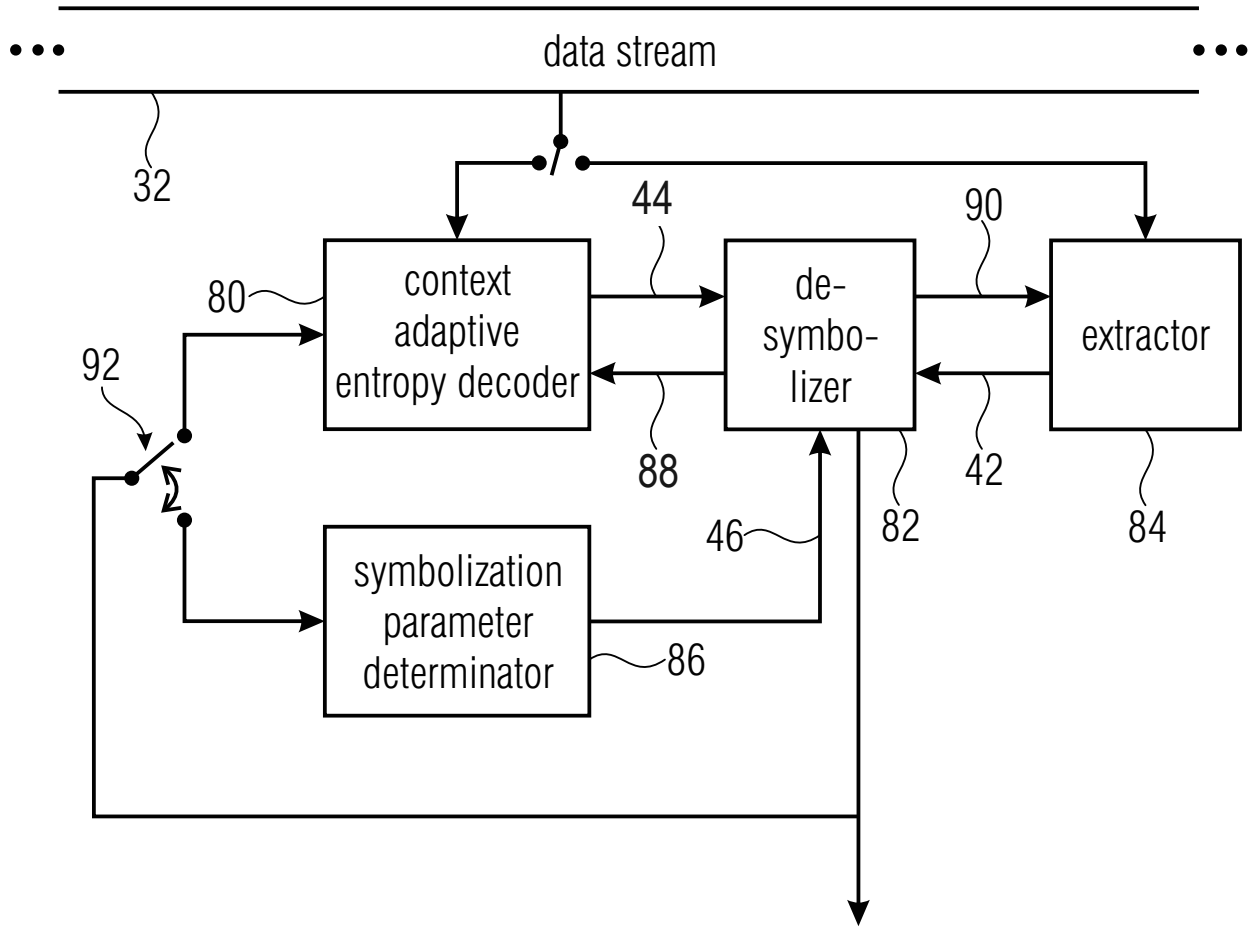

FIGURE 7

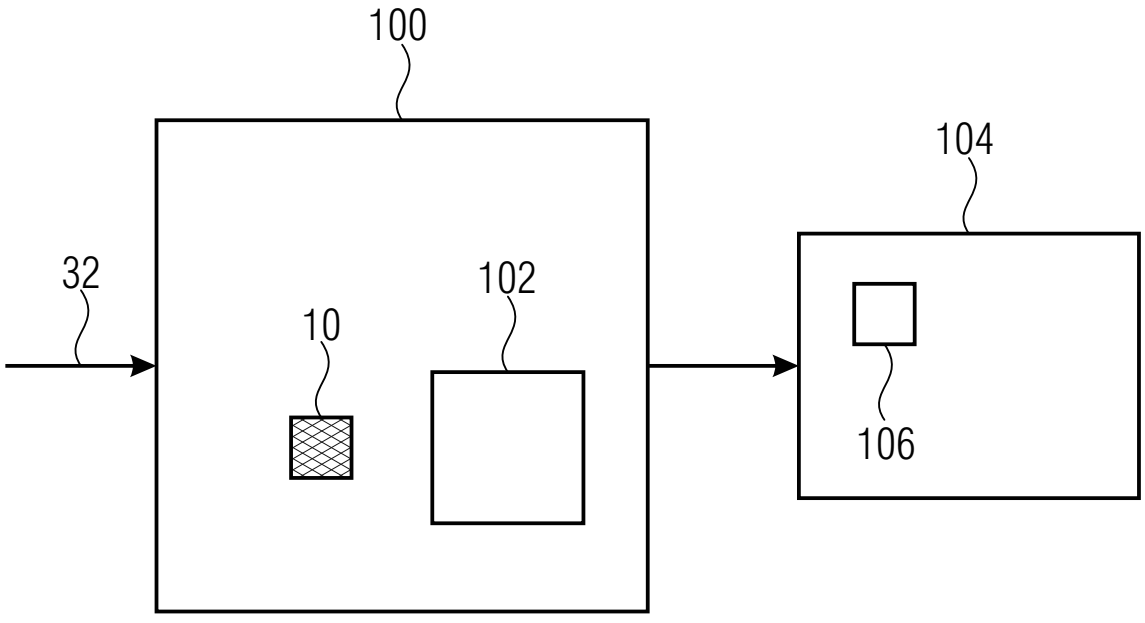

FIGURE 8

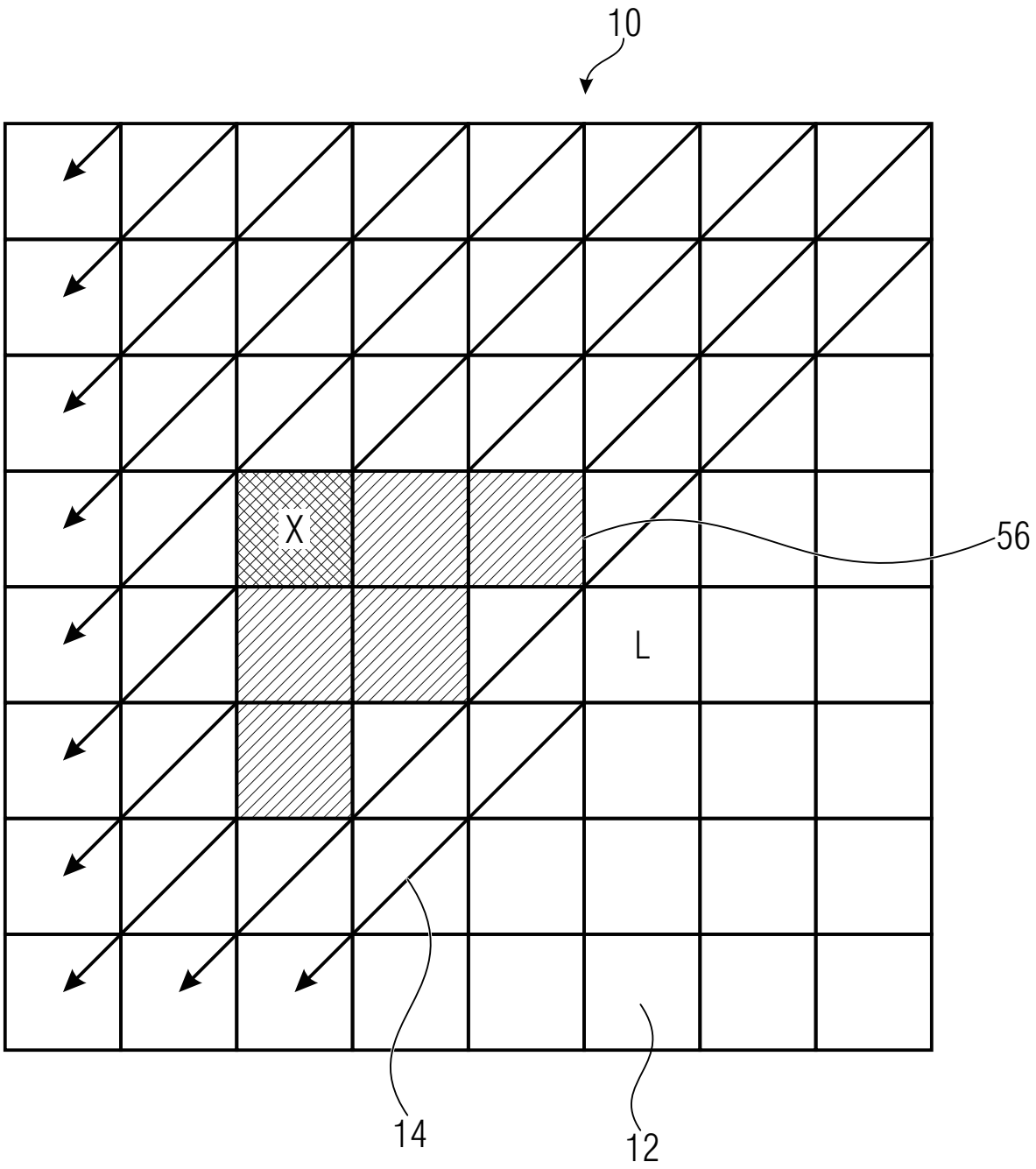

FIGURE 9