DRAWING

FIG.1

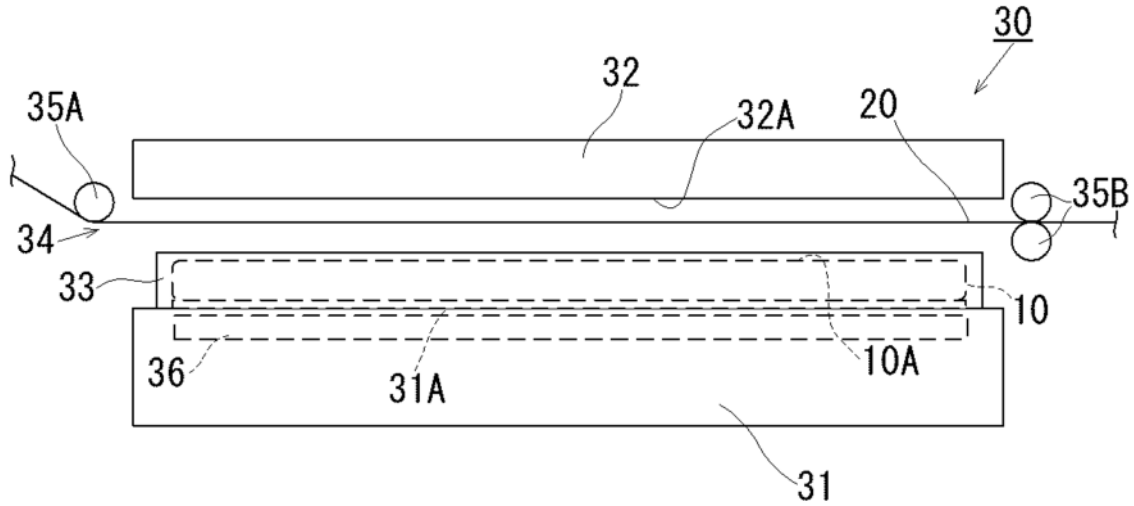

FIG.2

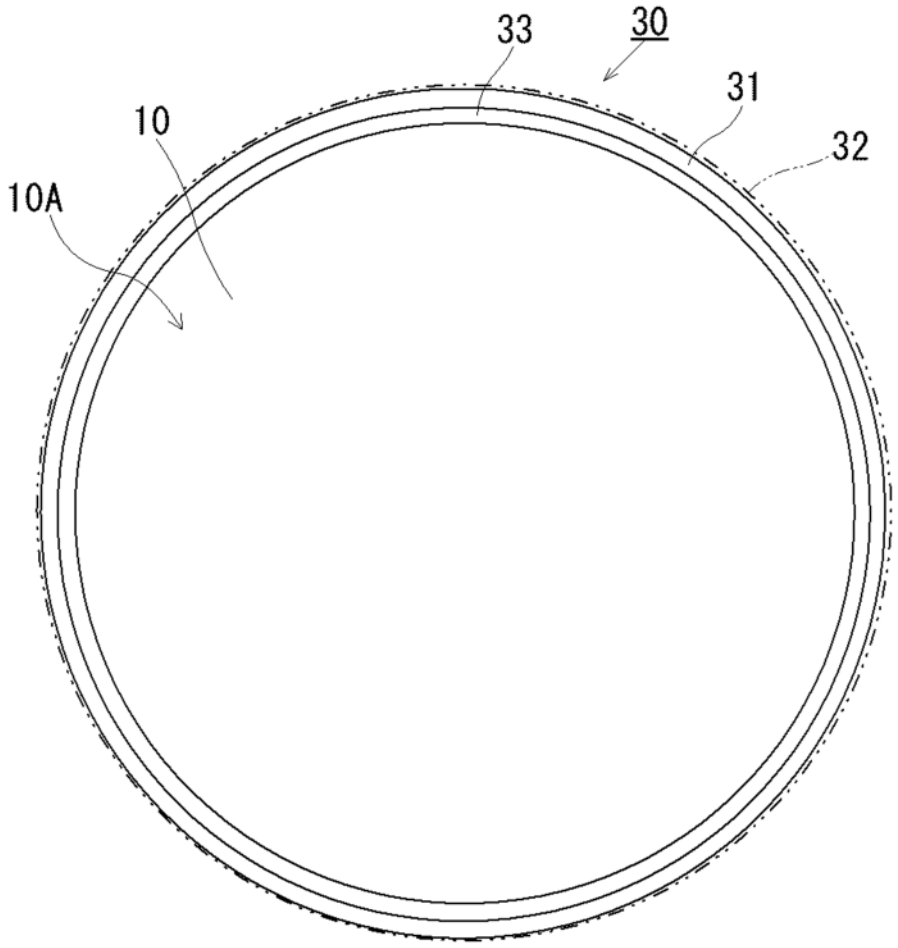

FIG.3

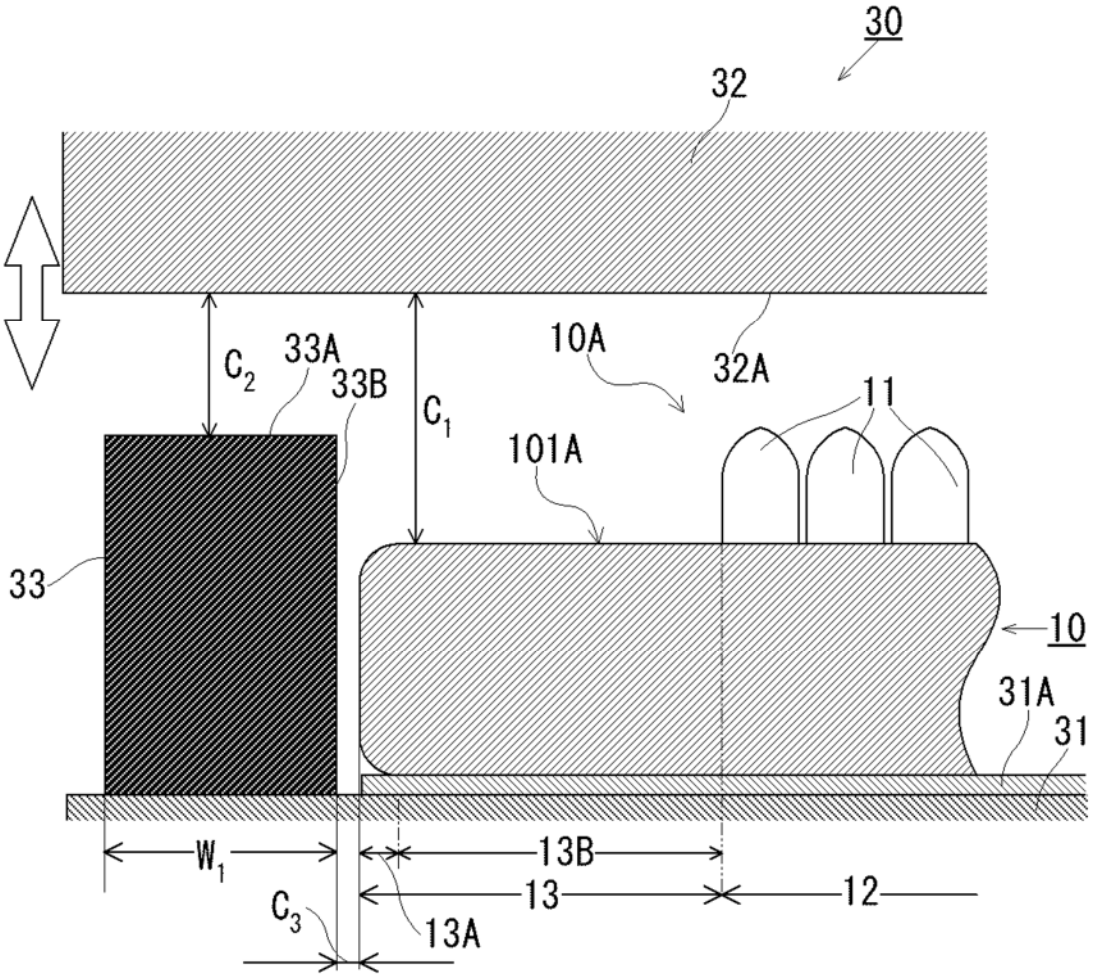
30
32
C_2
33A
33B
C_1
10A
32A
11
101A
33
10
31A
31
W_1
13B
13
12
C_3
13A

FIG.4

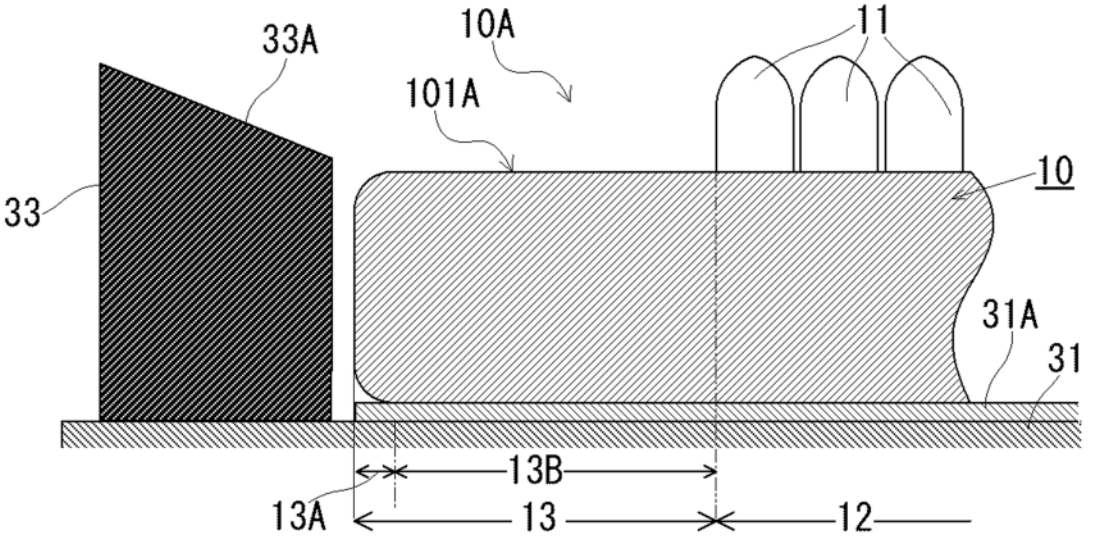
33A
10A
11
101A
33
10
31A
31
13B
13A
13
12

FIG.5

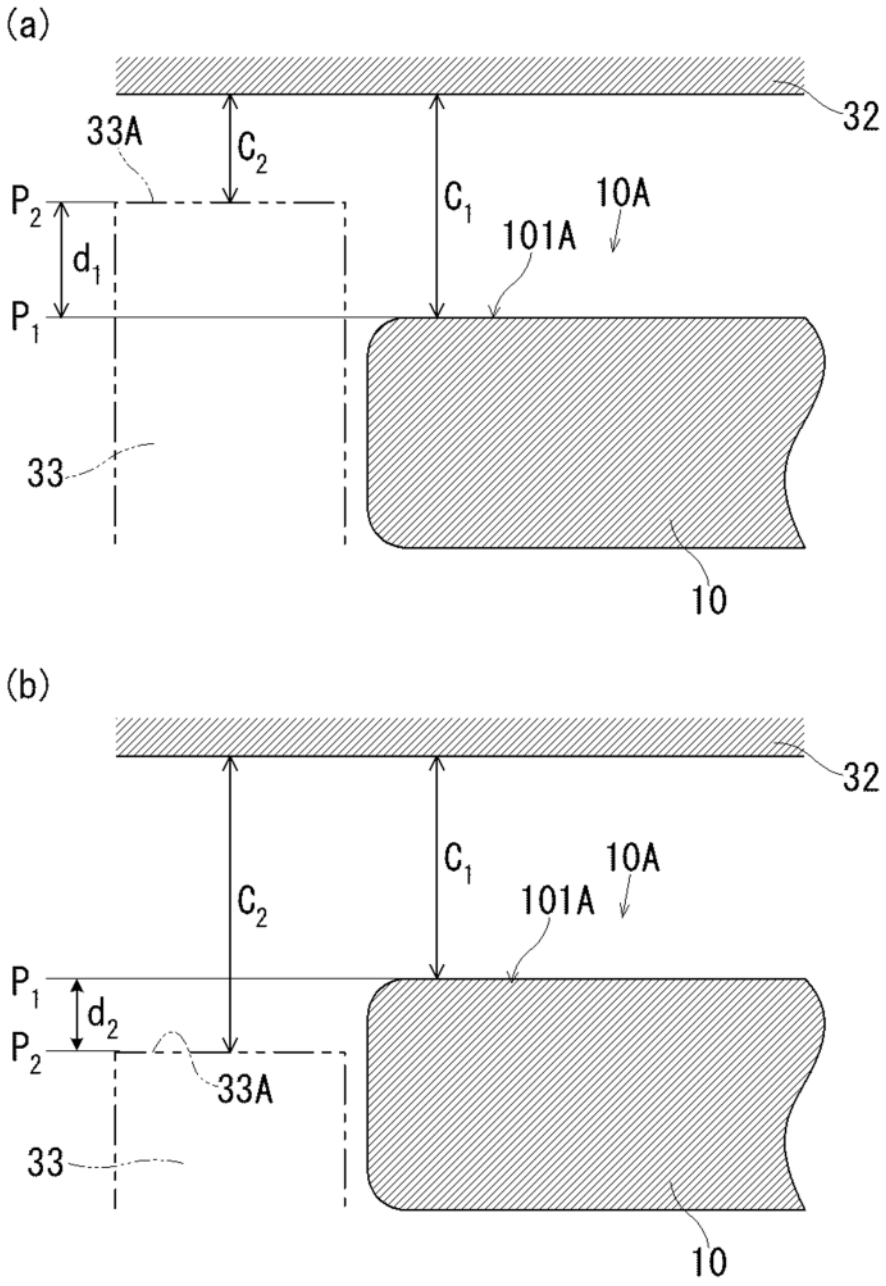
(a)
32
33A
C2
C1
10A
P2
d1
101A
P1
33
10
(b)
32
C1
10A
C2
101A
P1
d2
P2
33A
33
10

FIG.6

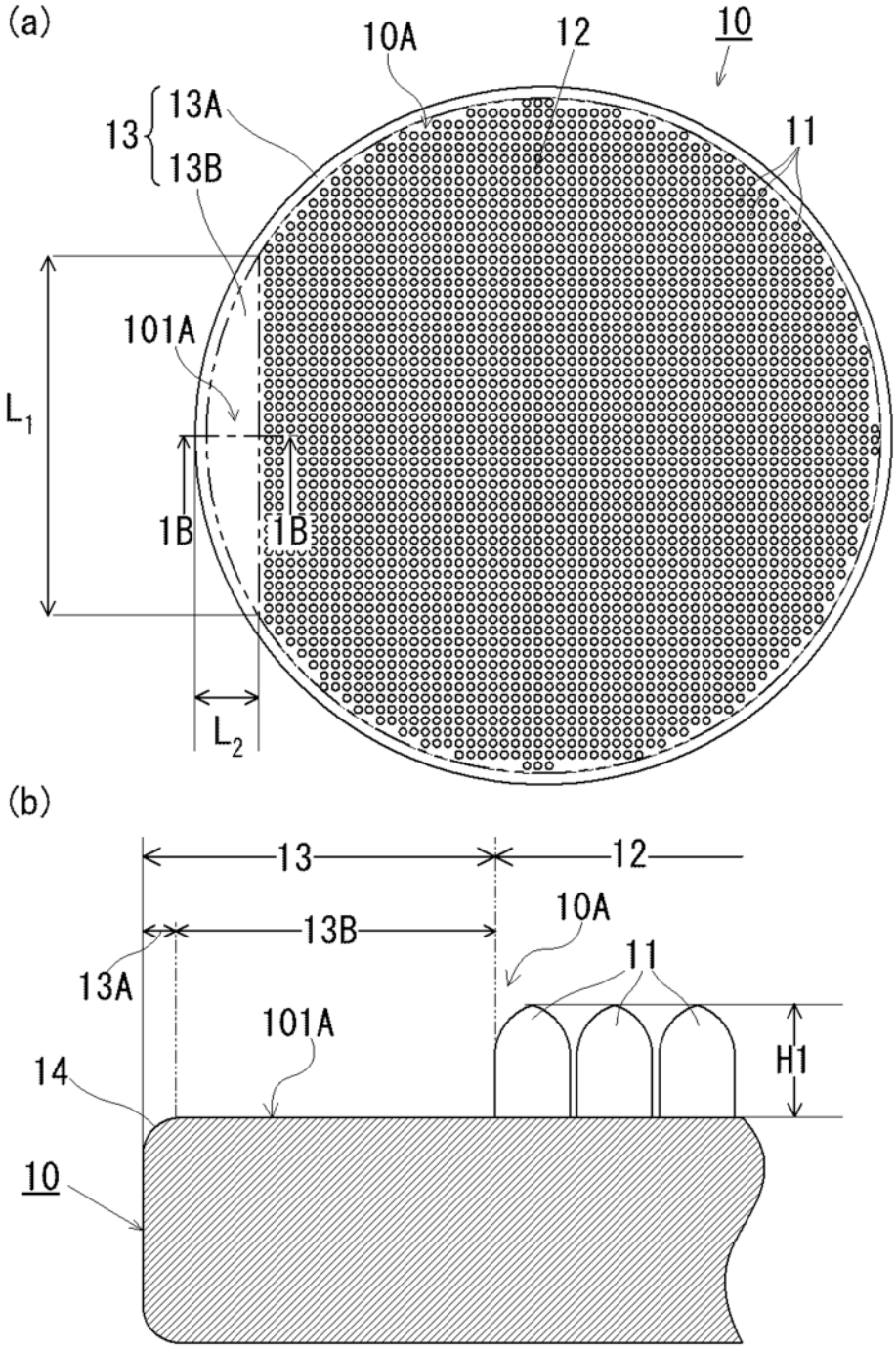
(a)
10A
12
10
13
13A
13B
11
101A
L1
1B
1B
L2
(b)
13
12
10A
13B
11
13A
101A
H1
14
10

FIG.7

(a)

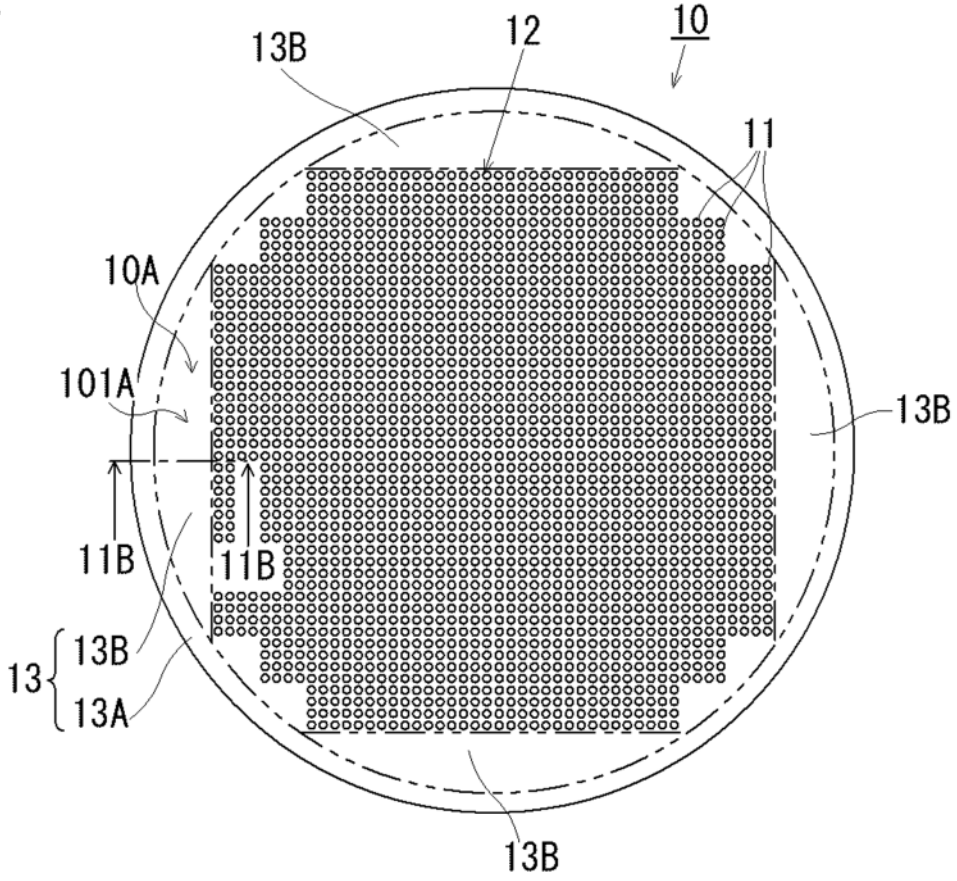
13B
12
10
11
10A
101A
13B
11B
11B
13
13B
13A
13B

(b)

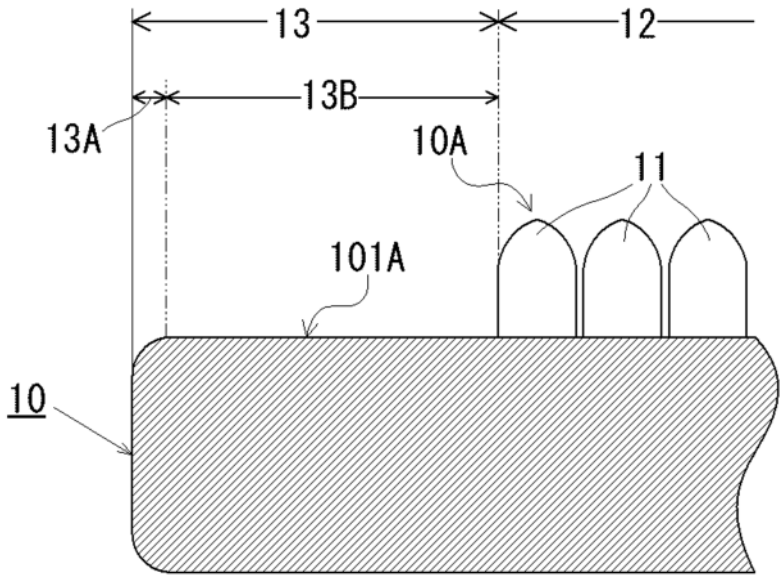
13
12
13B
13A
10A
11
101A
10

FIG.8

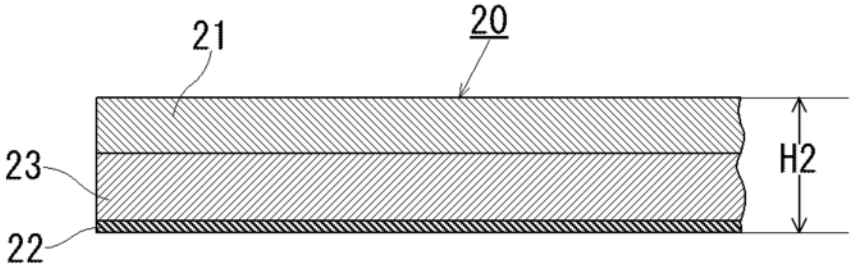
21
20
23
H2
22

FIG.9

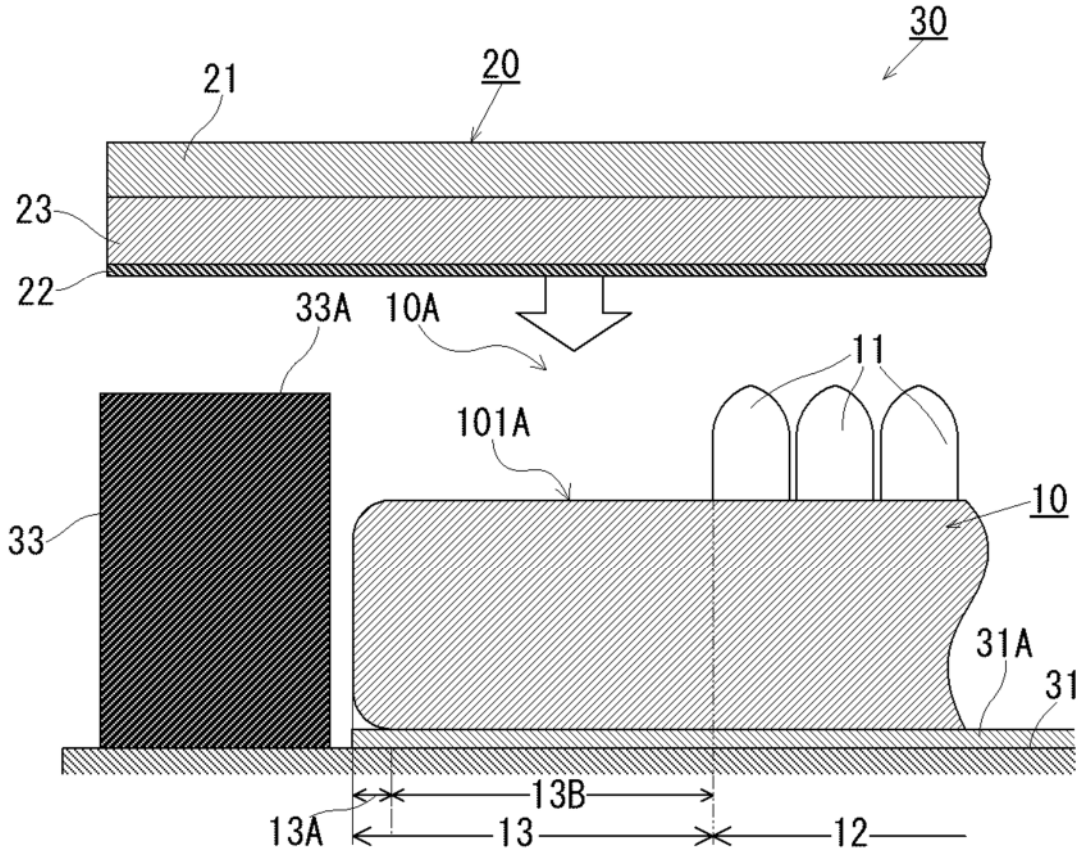
30
21
20
23
22
33A
10A
11
101A
10
33
31A
31
13B
13A
13
12

FIG.10

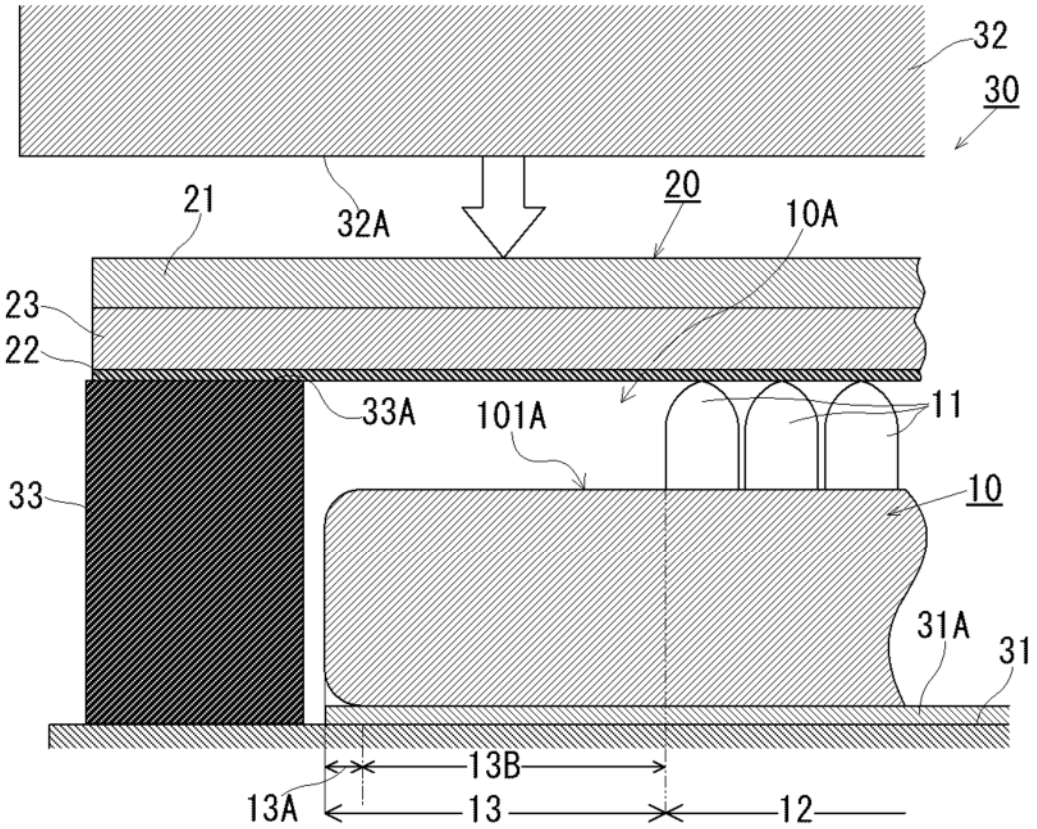
32
30
21
32A
20
10A
23
22
33A
101A
11
33
10
31A
31
13B
13A
13
12

FIG.11

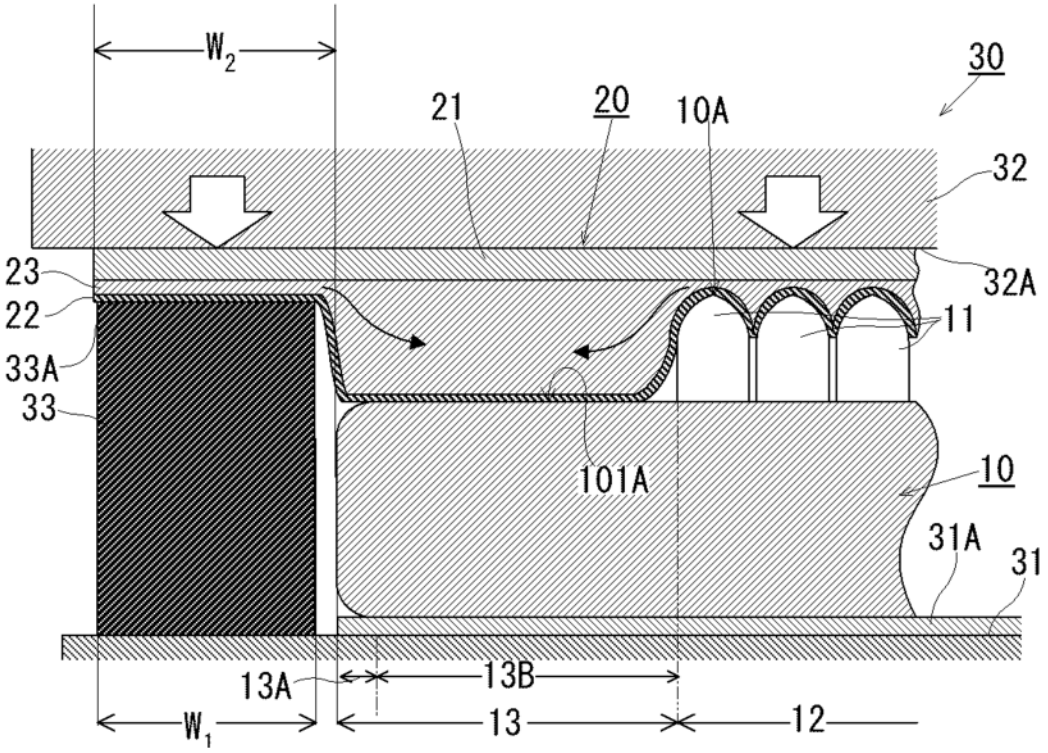
W2
30
21
20
10A
32
23
32A
22
11
33A
33
101A
10
31A
31
13A
13B
W1
13
12

FIG.12

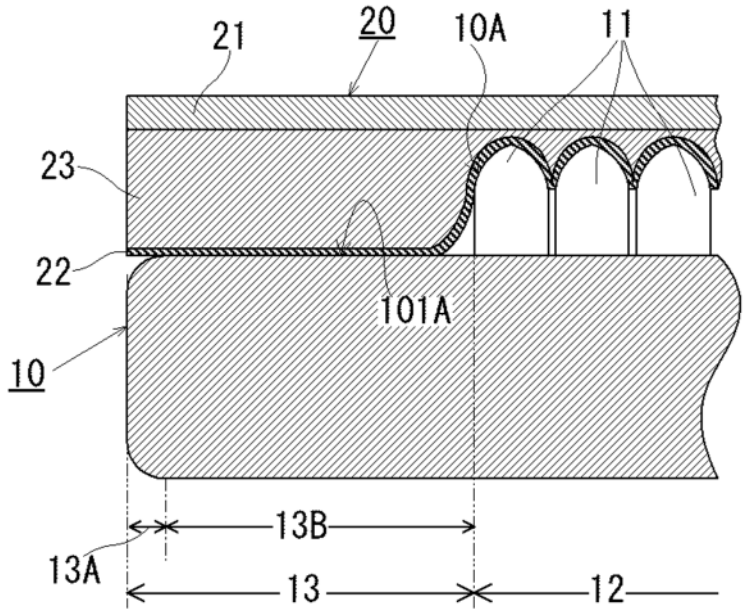
21
20
10A
11
23
22
101A
10
13B
13A
13
12

FIG.13

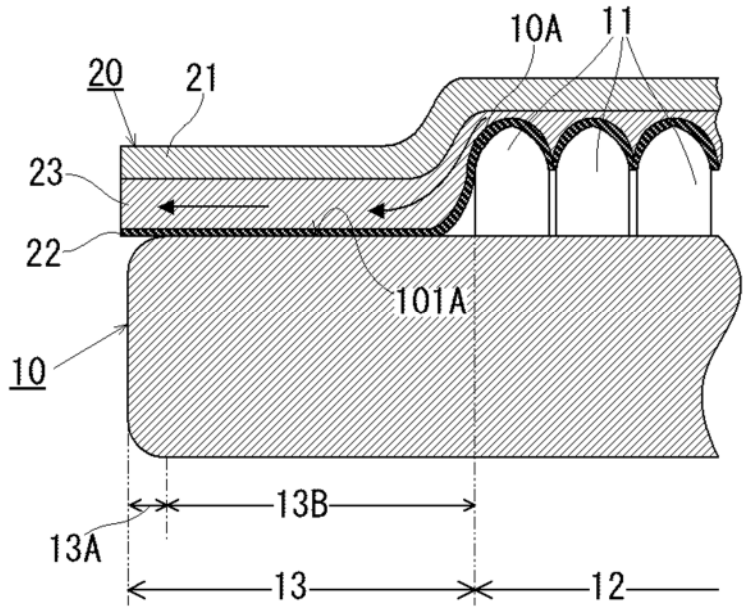
10A
11
20
21
23
22
101A
10
13B
13A
13
12

FIG.14

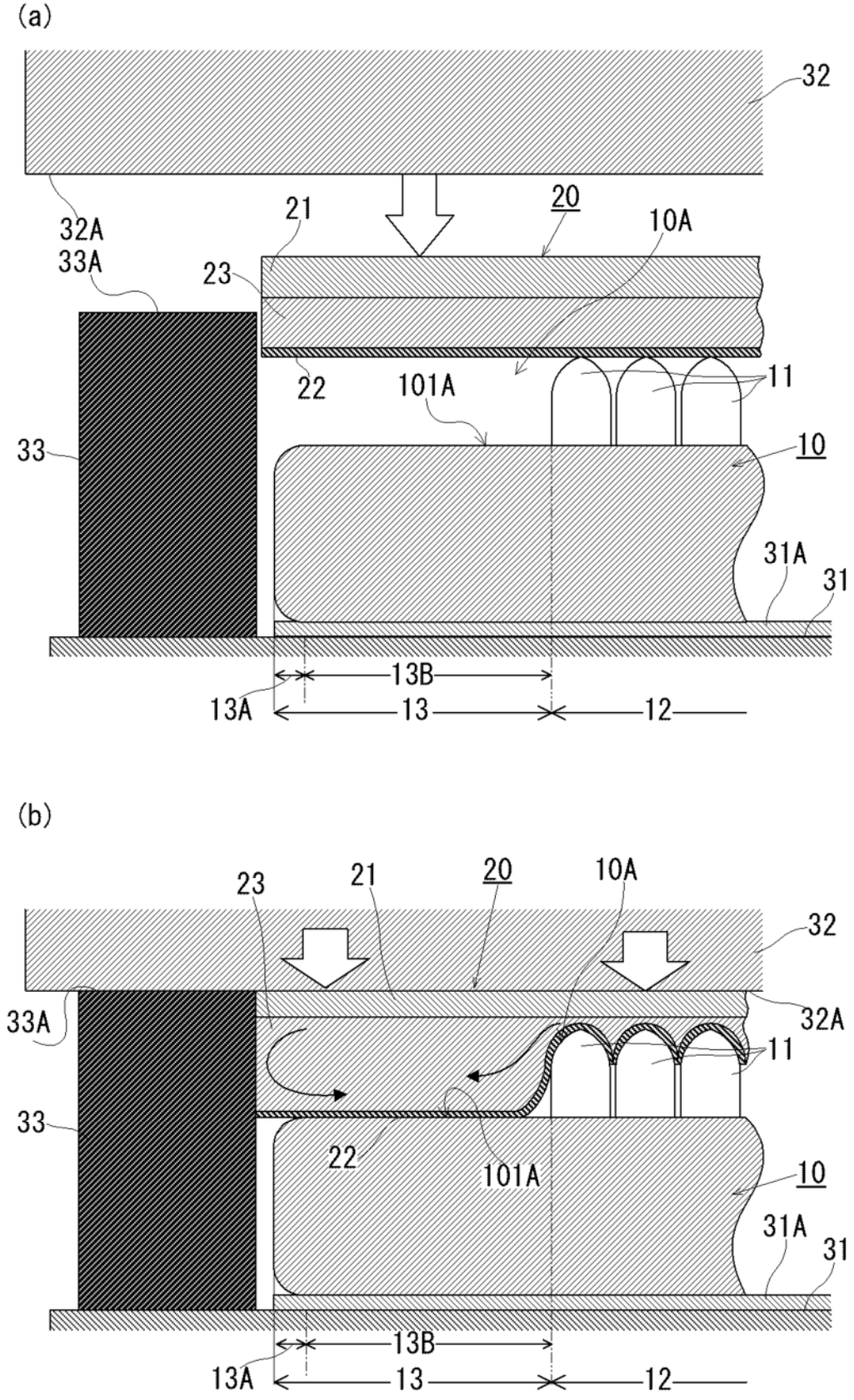
(a)
32
32A
33A
21
20
10A
23
22
101A
11
33
10
31A
31
13B
13A
13
12
(b)
23
21
20
10A
32
33A
32A
11
33
22
101A
10
31A
31
13B
13A
13
12

FIG.15

(a)

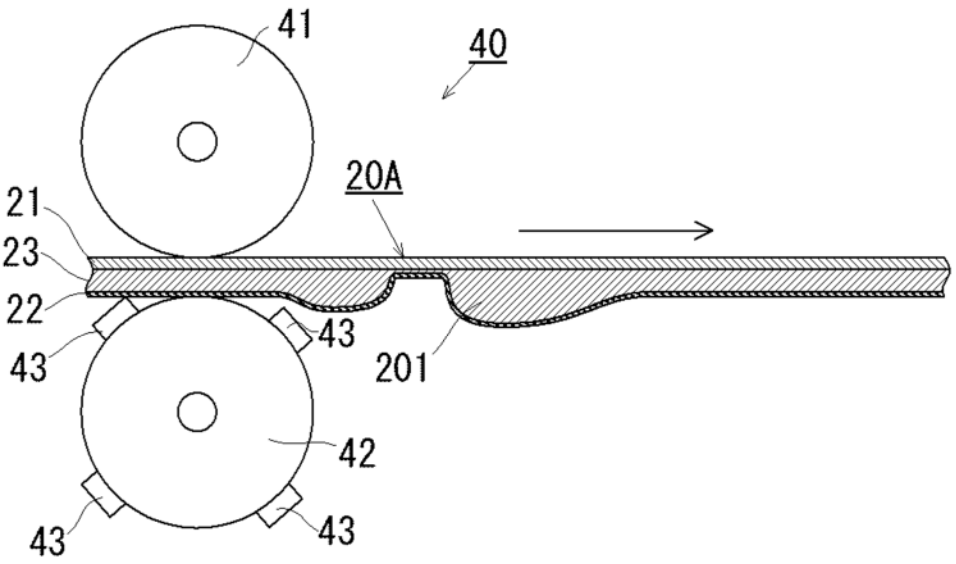

(b)

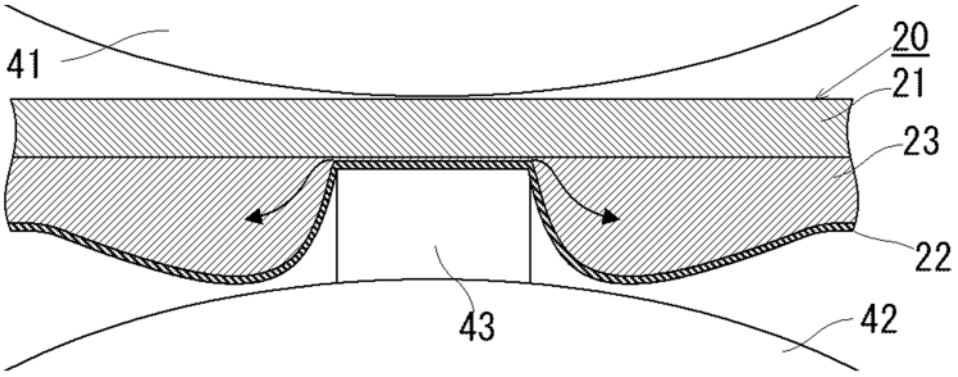

FIG.16

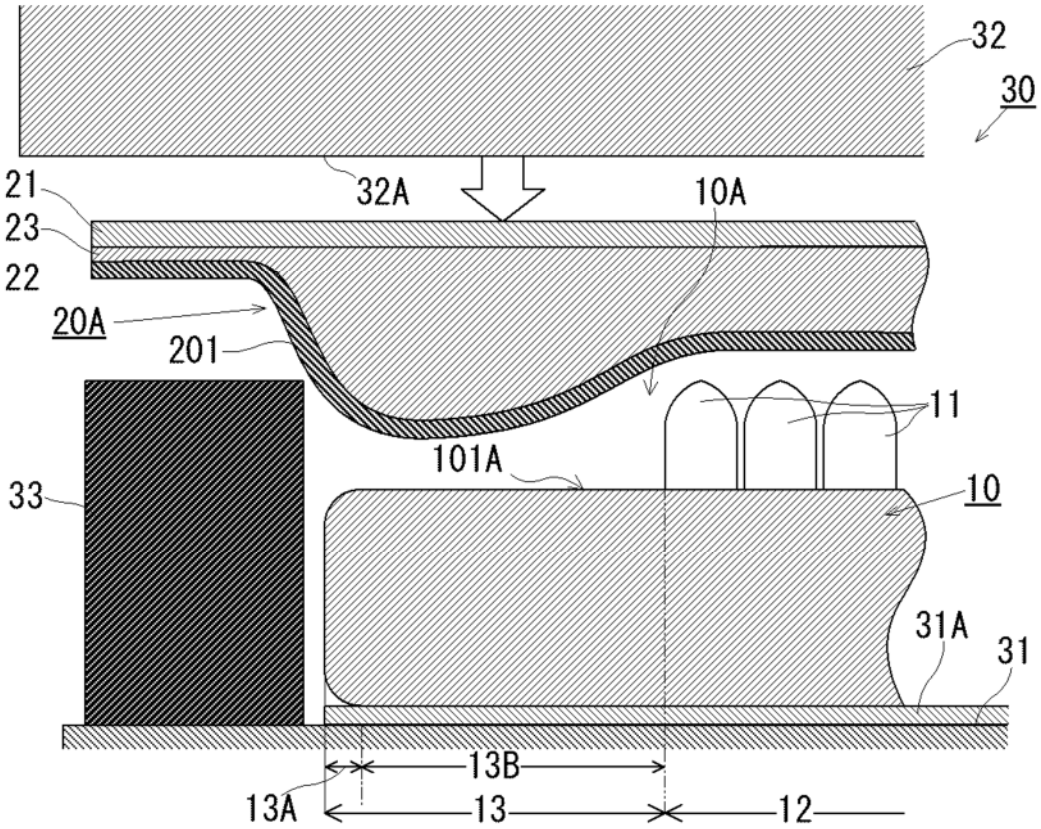
32
30
21
32A
10A
23
22
20A
201
11
101A
33
10
31A
31
13B
13A
13
12

FIG.17

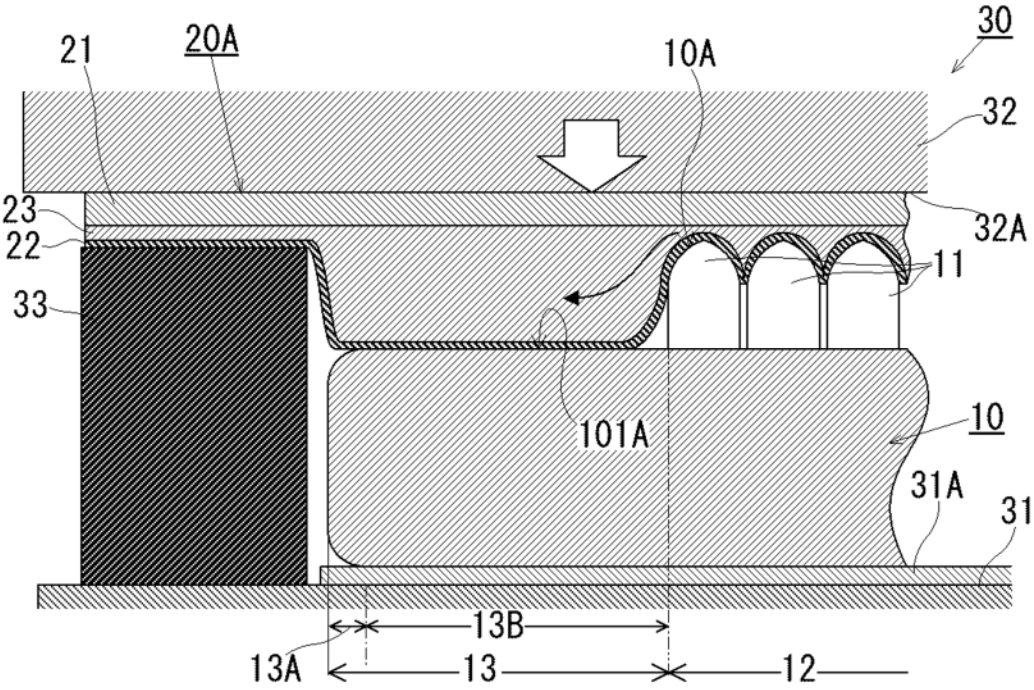
30
21
20A
10A
32
23
32A
22
11
33
101A
10
31A
31
13B
13A
13
12

FIG.18

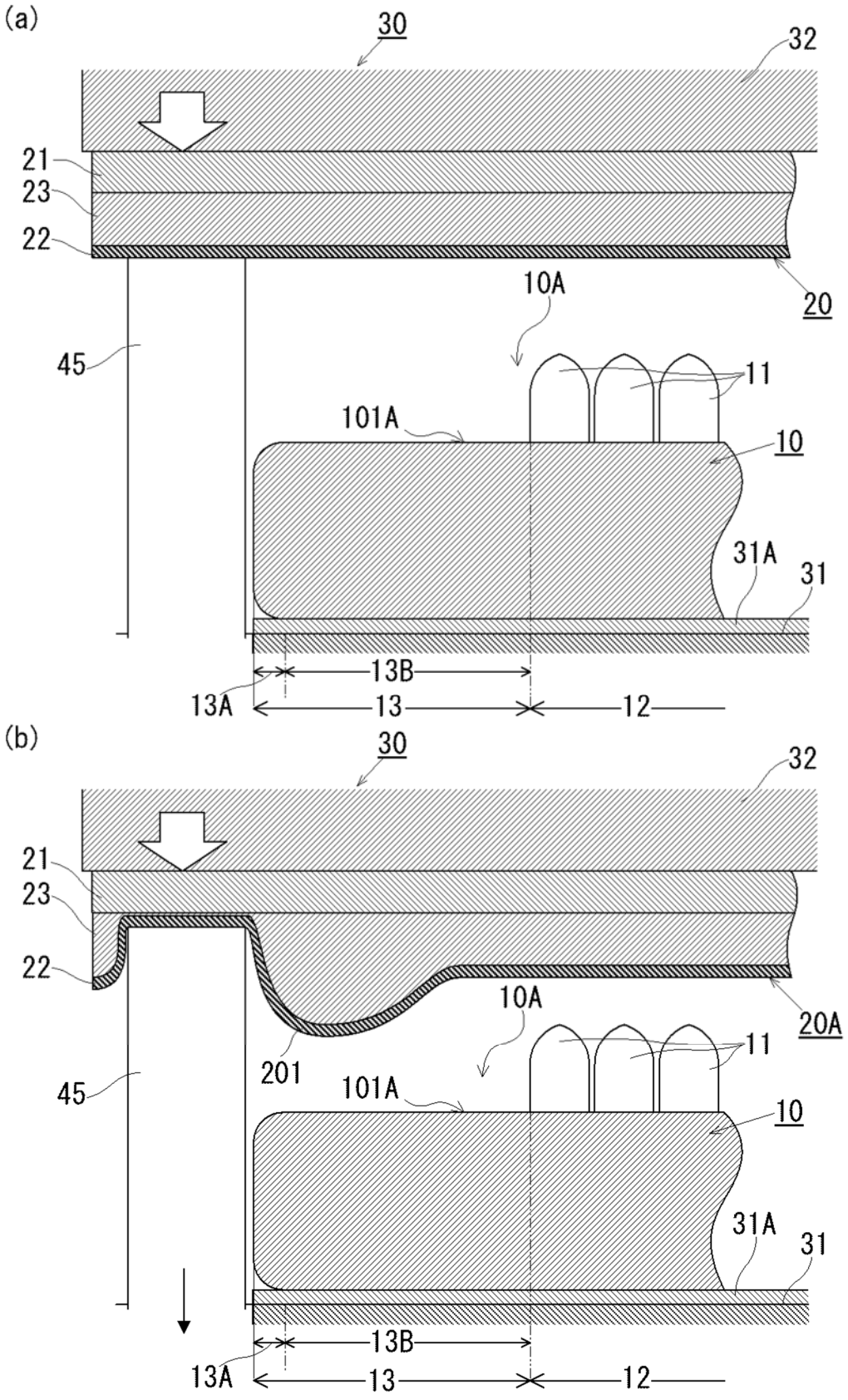
(a)
30
32
21
23
22
20
10A
45
11
101A
10
31A
31
13B
13A
13
12
(b)
30
32
21
23
22
20A
10A
201
11
45
101A
10
31A
31
13B
13A
13
12

FIG.19

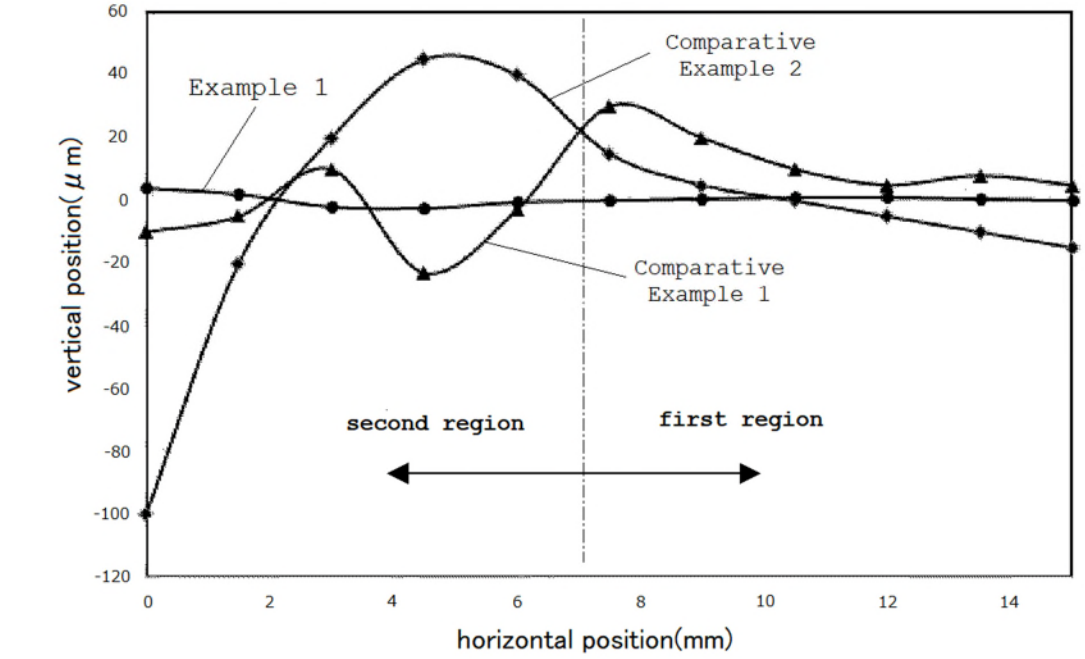
Example 1
Comparative Example 2
Comparative Example 1
second region
first region
vertical position(μm)
horizontal position(mm)
60
40
20
0
-20
-40
-60
-80
-100
-120
0
2
4
6
8
10
12
14

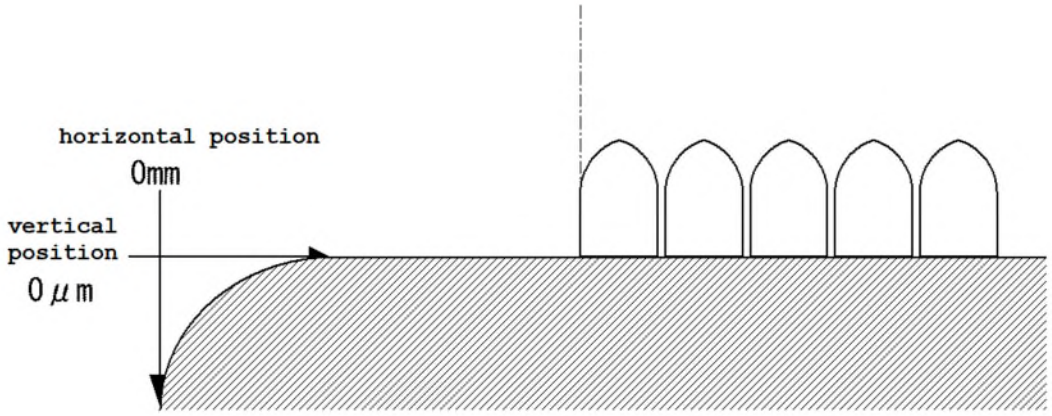
horizontal position
0mm
vertical position
0μm