(12) INTERNATIONAL APPLICATION PUBLISHED UNDER THE PATENT COOPERATION TREATY (PCT)

(19) World Intellectual Property Organization
International Bureau

(43) International Publication Date
22 May 2020 (22.05.2020)

WIPO | PCT

(10) International Publication Number
WO 2020/098761 A1

(51) International Patent Classification:
C12M 1/00 (2006.01)

(21) International Application Number:
PCT/CN2019/118655

(22) International Filing Date:
15 November 2019 (15.11.2019)

(25) Filing Language: English

(26) Publication Language: English

(30) Priority Data:
62/767,998 15 November 2018 (15.11.2018) US

(71) Applicant: **MGI TECH CO., LTD.** [CN/CN]; 11F-2, Complex Building Of Bei Shan Industrial Zone, No. 146 Bei Shan Road, Yantian District, Shenzhen, Guangdong 518083 (CN).

(72) Inventors: **WANG, Liang**; c/o Complete Genomics, Inc., 2904 Orchard Parkway San Jose, California 95134 (US). **ZHONG, Cheng Frank**; c/o Complete Genomics, Inc., 2904 Orchard Parkway San Jose, California 95134 (US). **LI, Shifeng**; c/o Complete Genomics, Inc., 2904 Orchard Parkway San Jose, California 95134 (US).

(74) Agent: **SYNCLAW ATTORNEYS**; Suites D314-316, Bldg 1#, 128 Xiangyin Road, Shanghai 200433 (CN).

(81) Designated States *(unless otherwise indicated, for every kind of national protection available)*: AE, AG, AL, AM, AO, AT, AU, AZ, BA, BB, BG, BH, BN, BR, BW, BY, BZ, CA, CH, CL, CN, CO, CR, CU, CZ, DE, DJ, DK, DM, DO, DZ, EC, EE, EG, ES, FI, GB, GD, GE, GH, GM, GT, HN, HR, HU, ID, IL, IN, IR, IS, JO, JP, KE, KG, KH, KN, KP, KR, KW, KZ, LA, LC, LK, LR, LS, LU, LY, MA, MD, ME, MG, MK, MN, MW, MX, MY, MZ, NA, NG, NI, NO, NZ, OM, PA, PE, PG, PH, PL, PT, QA, RO, RS, RU, RW, SA, SC, SD, SE, SG, SK, SL, SM, ST, SV, SY, TH, TJ, TM, TN, TR, TT, TZ, UA, UG, US, UZ, VC, VN, ZA, ZM, ZW.

(84) Designated States *(unless otherwise indicated, for every kind of regional protection available)*: ARIPO (BW, GH, GM, KE, LR, LS, MW, MZ, NA, RW, SD, SL, ST, SZ, TZ, UG, ZM, ZW), Eurasian (AM, AZ, BY, KG, KZ, RU, TJ, TM), European (AL, AT, BE, BG, CH, CY, CZ, DE, DK, EE, ES, FI, FR, GB, GR, HR, HU, IE, IS, IT, LT, LU, LV, MC, MK, MT, NL, NO, PL, PT, RO, RS, SE, SI, SK, SM, TR), OAPI (BF, BJ, CF, CG, CI, CM, GA, GN, GQ, GW, KM, ML, MR, NE, SN, TD, TG).

Published:
— *with international search report (Art. 21(3))*

(54) **Title:** SYSTEM AND METHOD FOR INTEGRATED SENSOR CARTRIDGE

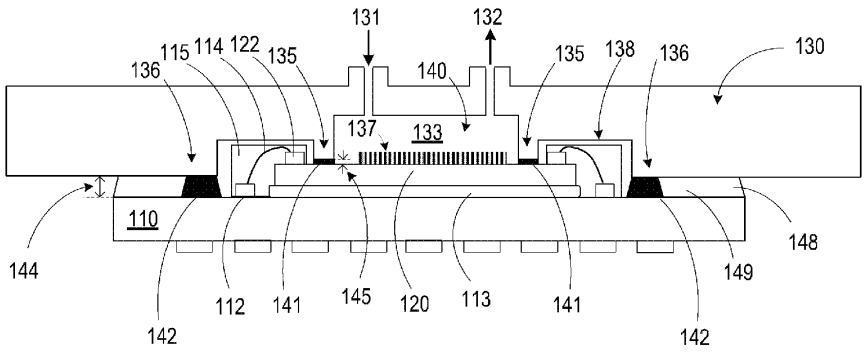

FIG. 1

(57) **Abstract:** A microfluidic apparatus (100) can include a PCB (110), a biological chip (120) overlying the PCB (110), and a microfluidic housing (130) overlying the biological chip (120) and the PCB (110). The microfluidic apparatus (100) also has a first adhesive layer (141) attaching the microfluidic housing (130) to the biological chip (120) and a second adhesive layer (142) attaching the microfluidic housing (130) to the PCB (110). The second adhesive layer (142) is thicker than the first adhesive layer (141). The first adhesive layer (141) comprises a first adhesive material, and the second adhesive layer (142) comprises a second adhesive material.

WO 2020/098761 A1