FIG. 1

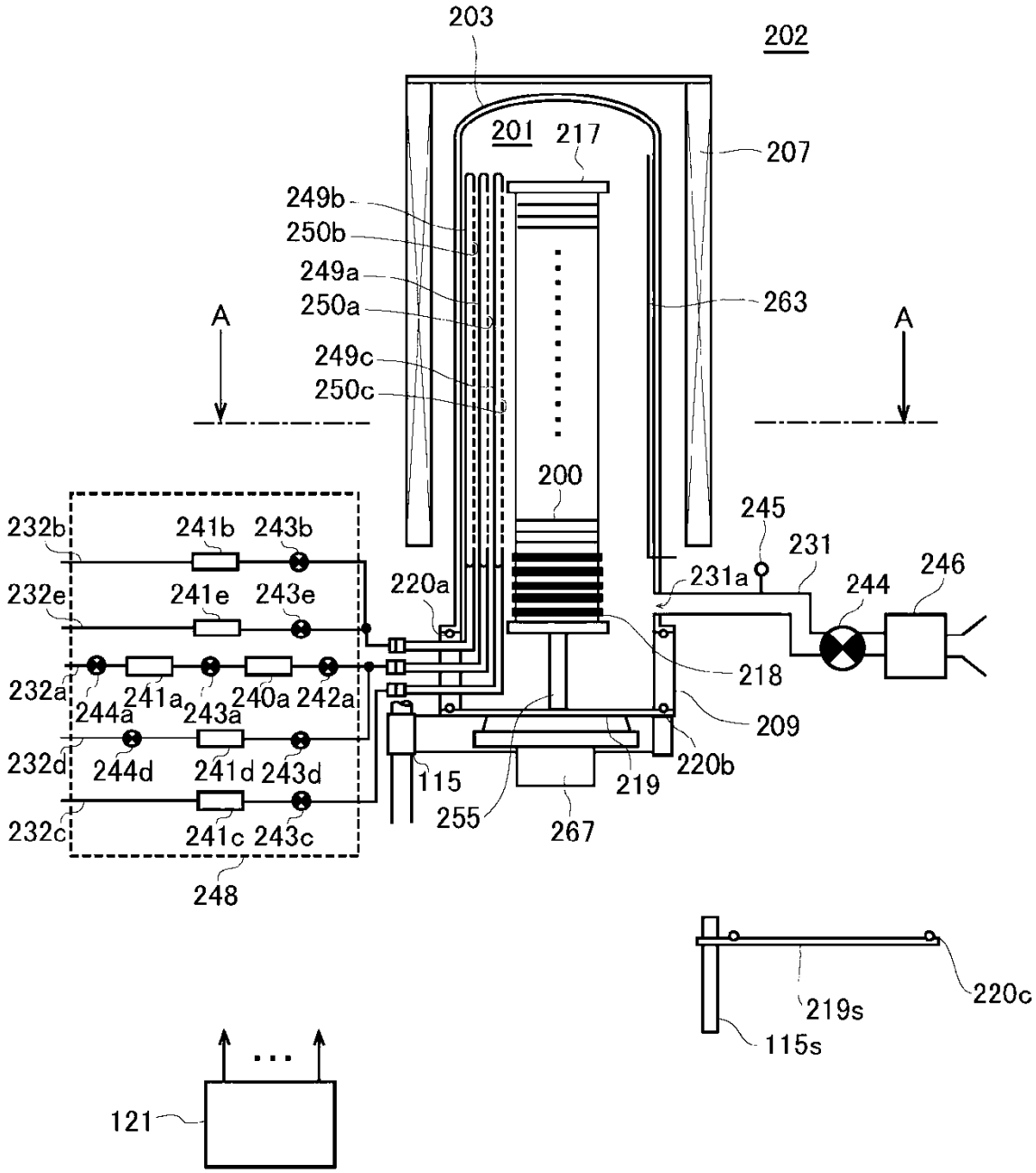
203
202
201
217
207
249b
250b
249a
250a
263
A
A
249c
250c
200
245
231
246
244
231a
220a
218
232b
241b
243b
232e
241e
243e
232a
244a
241a
243a
240a
242a
209
232d
244d
241d
243d
220b
115
219
255
267
232c
241c
243c
248
220c
219s
115s
121

FIG. 2

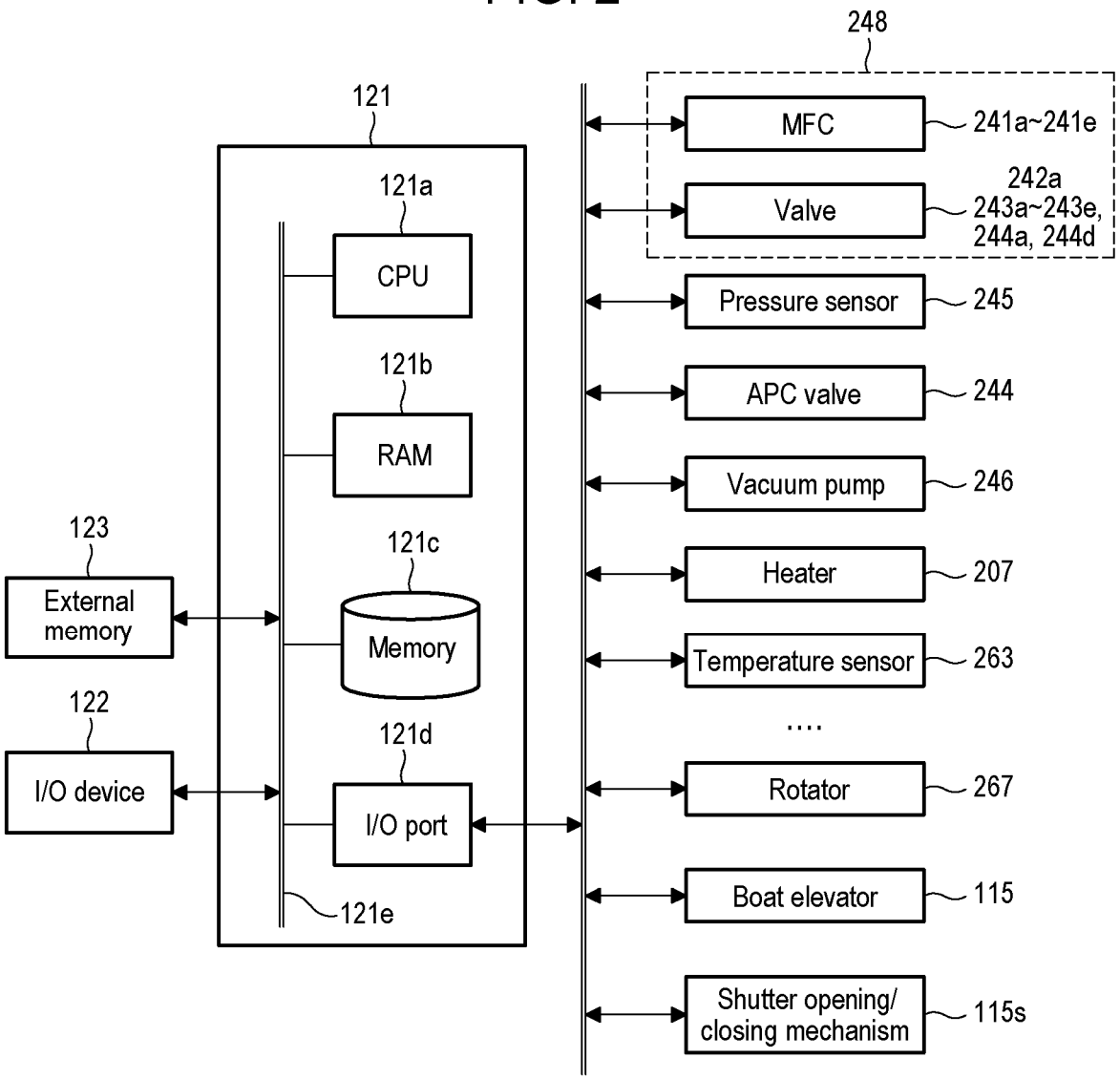
248
121
121a
CPU
121b
RAM
121c
Memory
121d
I/O port
121e
123
External memory
122
I/O device
MFC
241a~241e
Valve
242a
243a~243e,
244a, 244d
Pressure sensor
245
APC valve
244
Vacuum pump
246
Heater
207
Temperature sensor
263
....
Rotator
267
Boat elevator
115
Shutter opening/ closing mechanism
115s

FIG. 3

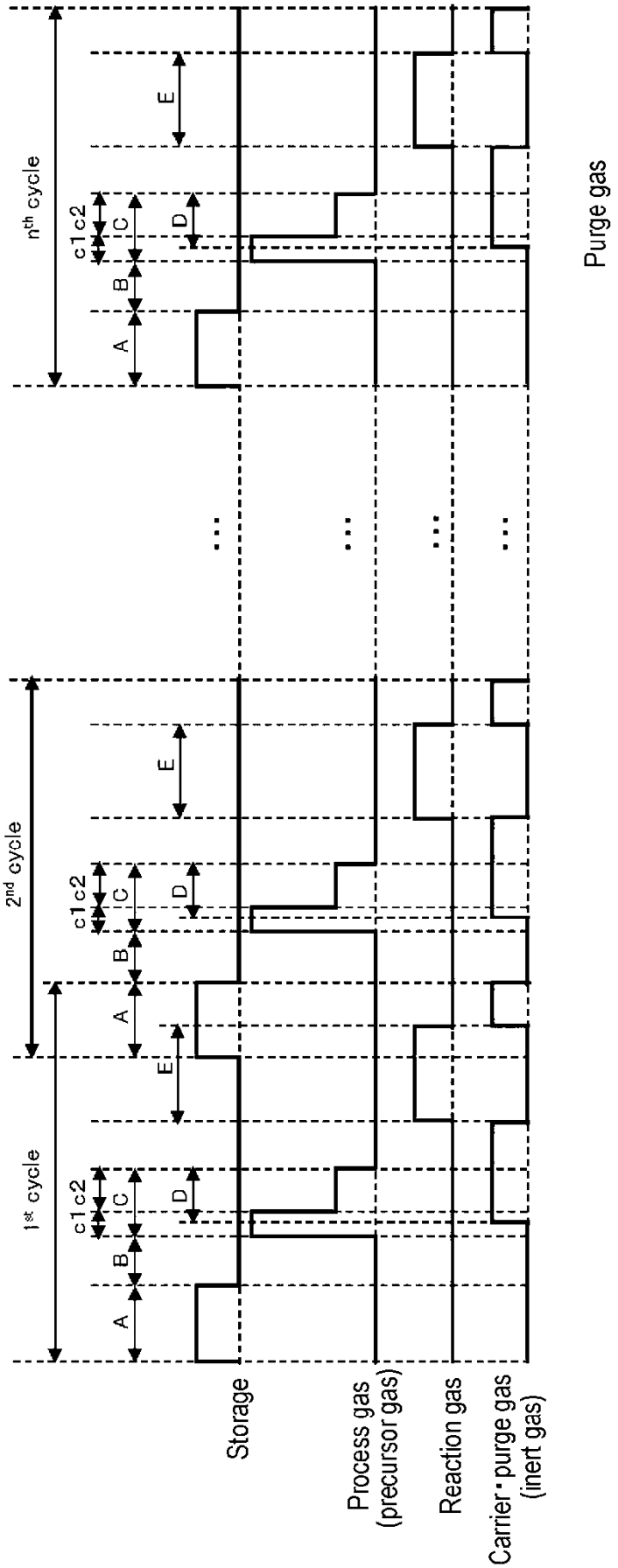
1st cycle
2nd cycle
nth cycle
A
B
c1c2
C
D
E
Storage
Process gas (precursor gas)
Reaction gas
Carrier • purge gas (inert gas)
Purge gas

FIG. 4A

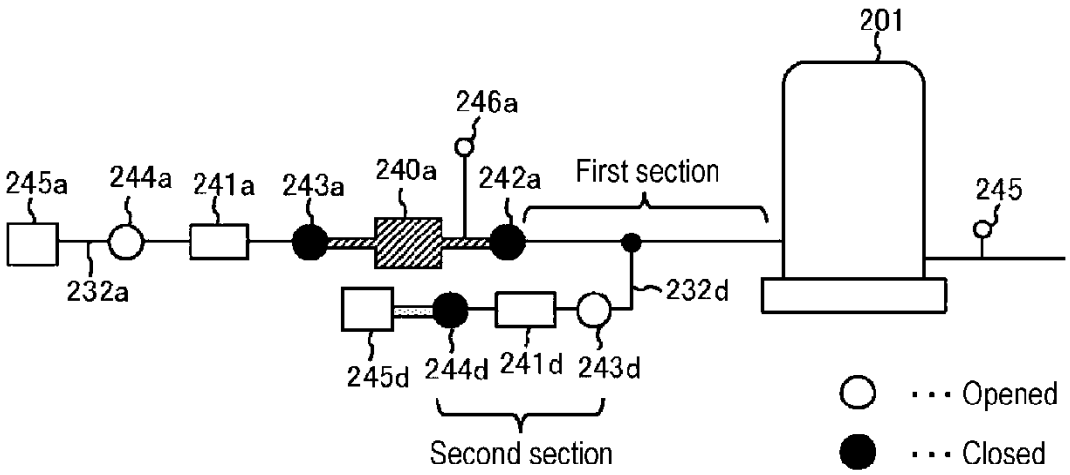


FIG. 4B

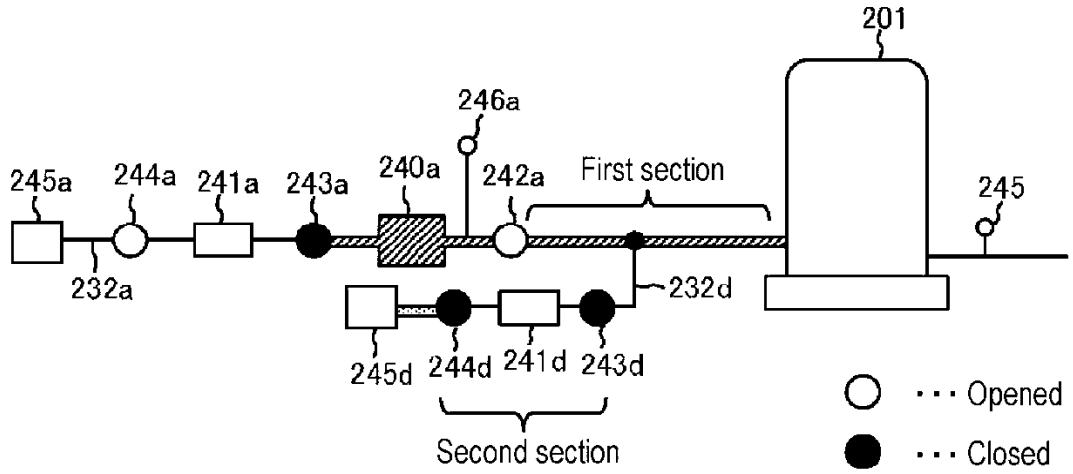


FIG. 4C

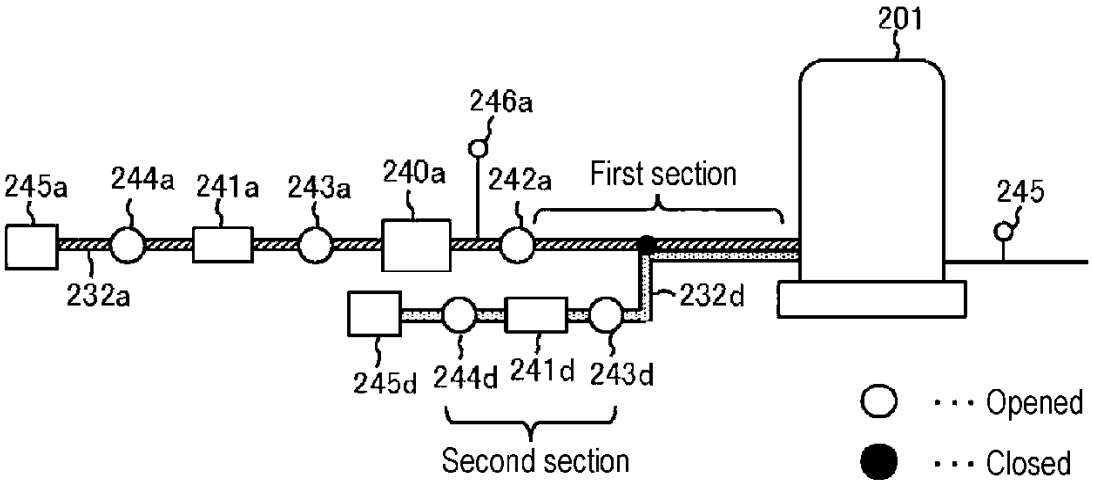

FIG. 5A

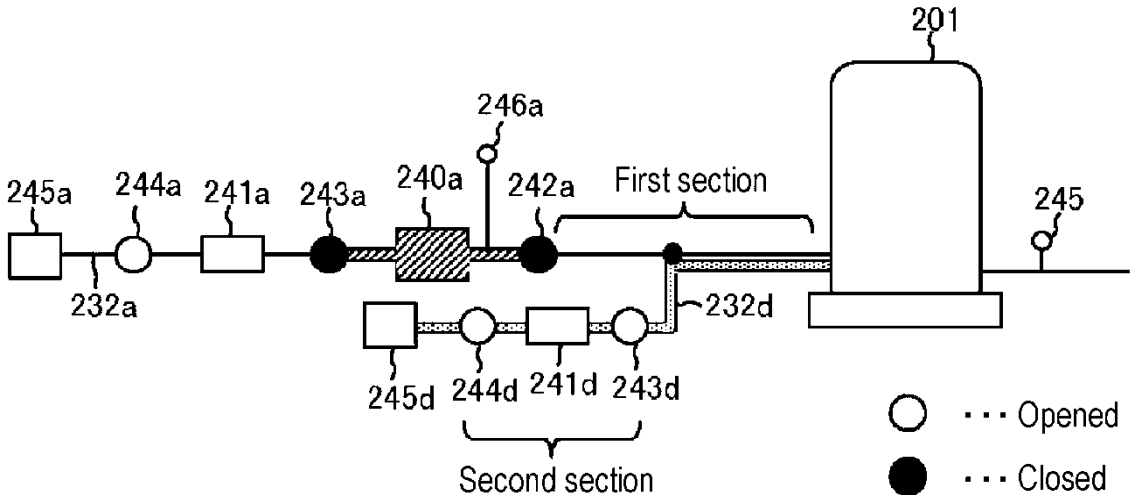
201
246a
245a
244a
241a
243a
240a
242a
First section
245
232a
232d
245d
244d
241d
243d
Second section
Opened
Closed

FIG. 5B

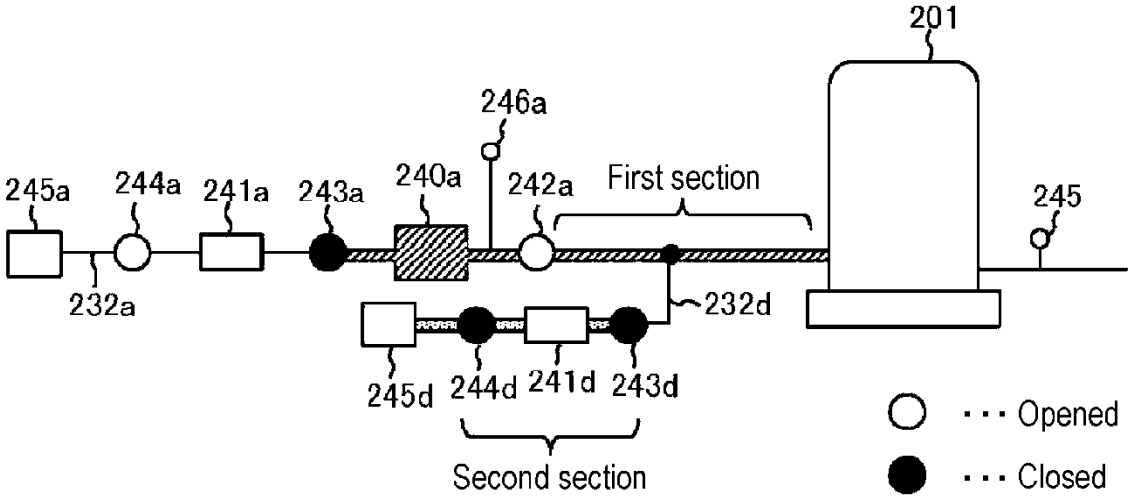
201
246a
245a
244a
241a
243a
240a
242a
First section
245
232a
232d
245d
244d
241d
243d
Second section
Opened
Closed

FIG. 6A

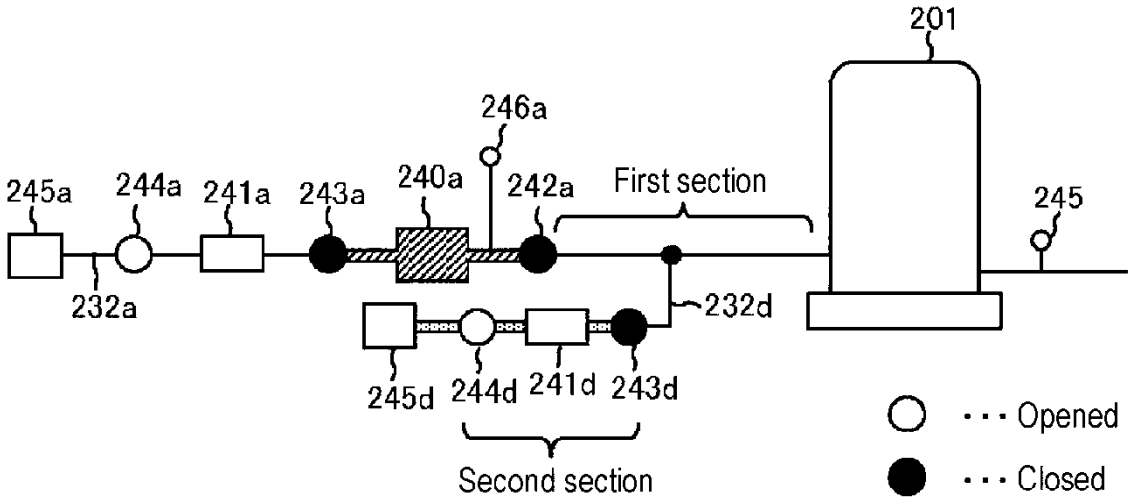
201
246a
245a
244a
241a
243a
240a
242a
First section
245
232a
232d
245d
244d
241d
243d
Second section
Opened
Closed

FIG. 6B

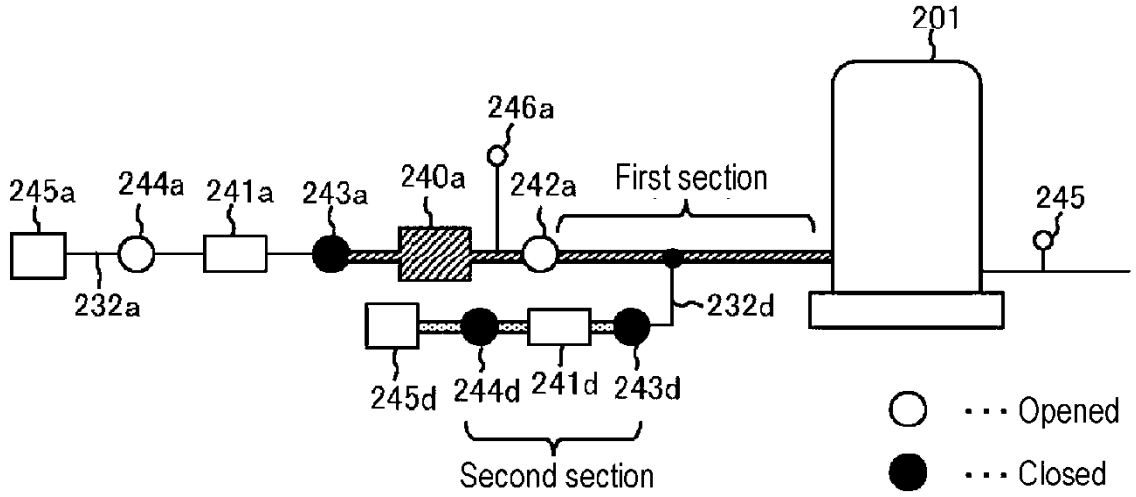
201
246a
245a
244a
241a
243a
240a
242a
First section
245
232a
232d
245d
244d
241d
243d
Second section
Opened
Closed

FIG. 7

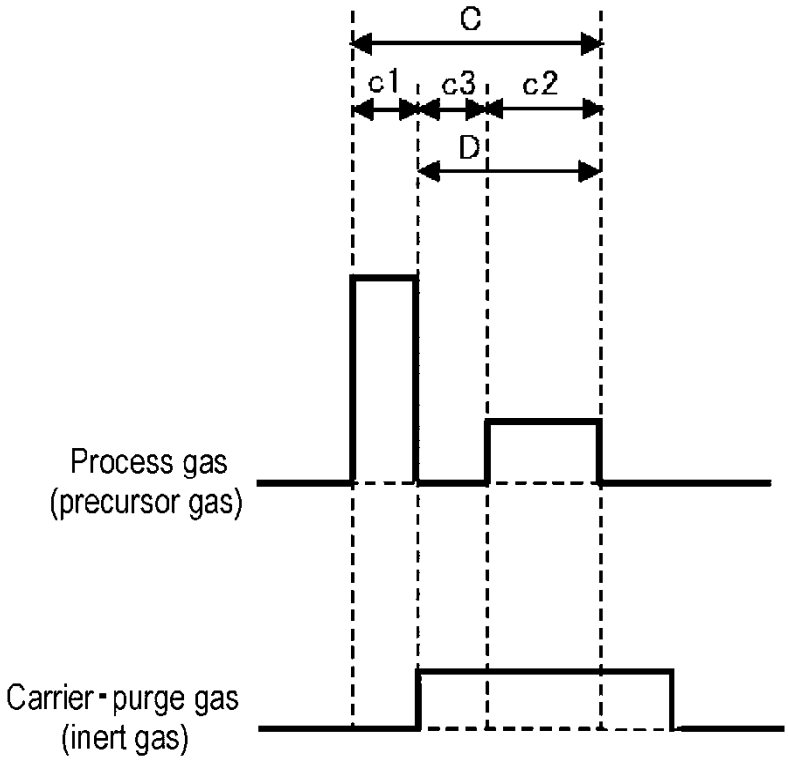
C
c1
c3
c2
D
Process gas
(precursor gas)
Carrier·purge gas
(inert gas)
Purge gas