A preferred embodiment of this invention is described hereinafter, by way of example only, with reference to the drawings, in which:

a. Figure 1 is a front view of a AI based laser light pest repellent (L2PR) apparatus in a popsicle shape self-contained apparatus suspended from a building structure in accordance with a first embodiment of this invention;

b. Figure 2 is a section across the front view (see through) of the L2PR apparatus as shown in Figure l with second embodiment of the steel support stem and the third embodiment of functional components inside the apparatus;

c. Figure 3 is a side view of the L2PR apparatus as shown in Figure l & Figure 2;

d. Figure 4 is a section across the front view (see through) of the L2PR apparatus as shown in Figure 3 with second embodiment of the steel support stem and the third embodiment of functional components inside the apparatus; and

e. Figure 5 is a plan view of the turret base with the demonstrative angle of view of the CCTV camera and projection angle of the high-level laser gun/s.

f. Figure 6 is a plan view of the turret body with the demonstrative angle of view of the and projection angle of the low-level laser gun/s.

g. Figure 7: Section view of Area of Protection with single apparatus (Bounding Box illustrated)

h. Figure 8: Plan view of Area of Protection (Camera lined to center of Bounding Box illustrated)

i. Figure 9: Plan view of Area of Protection (Camera lined to edge of Bounding Box illustrated)

j. Figure 10: Section view of Area of Protection with two Apparatus (Bounding Box illustrated)

k. Figure 11: Plan view of Area of Protection with 2 apparatus (Bounding Box illustrated)

l. Figure 12: Section view of Area of Protection with Spot Target area (close distance illustrated)

m. Figure 13: Plan view of Area of Protection with Spot Target area (close distance target area illustrated)

n. Figure 14 Section view of Area of Protection with Spot Target area (intermediate distance illustrated)

o. Figure 15 Plan view of Area of Protection with Spot Target area (intermediate distance illustrated)

p. Figure 16 Section view of Area of Protection with Spot Target area (Yonder distance illustrated)

q. Figure 17 Plan view of Area of Protection with Spot Target area (Yonder distance illustrated)

r. Figure 18 High level laser beam projection

Drawings

Figure 1: Front elevation of apparatus

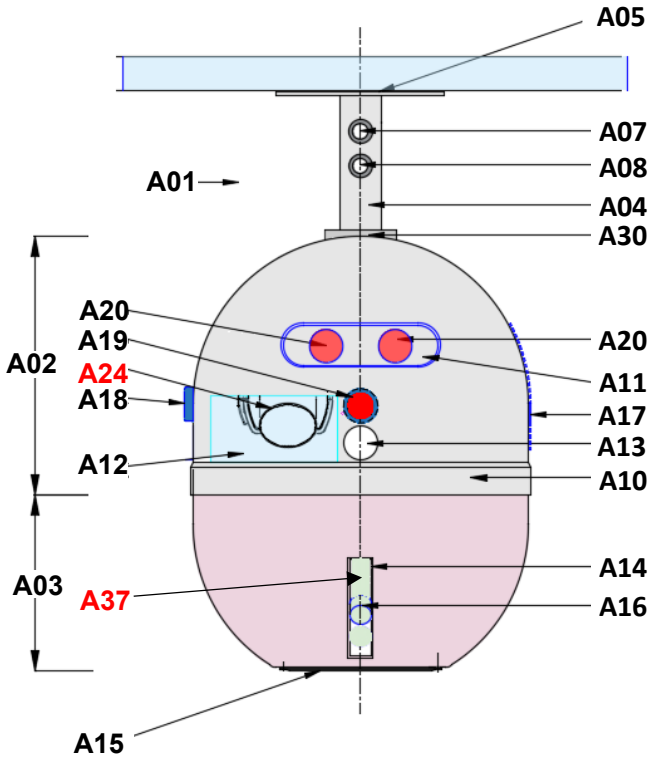

Figure 2: Section (exposed) view across front elevation of apparatus

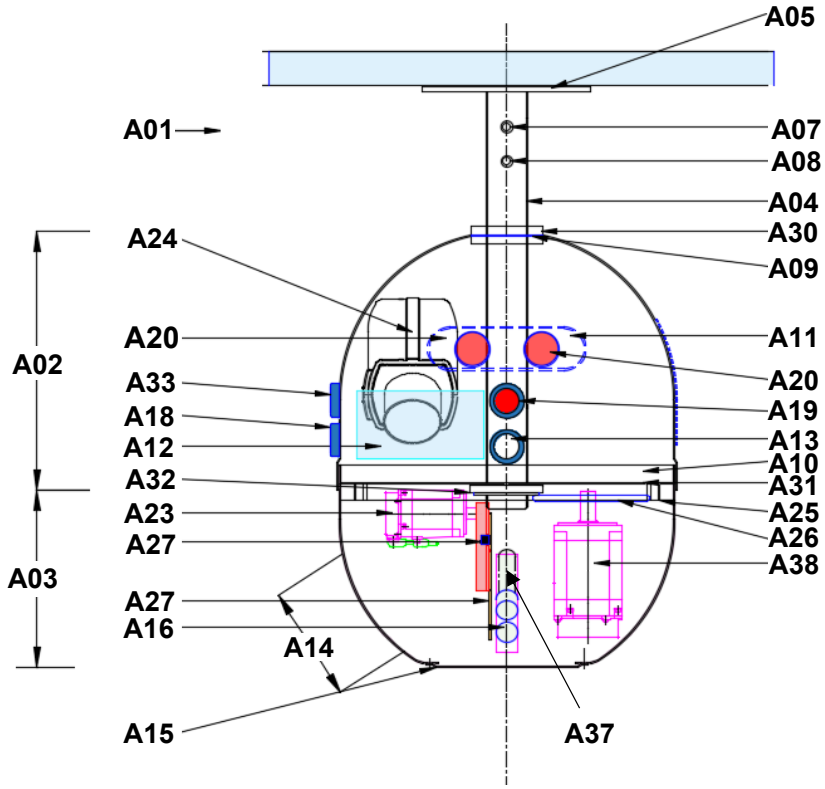

A40 rotary mechanism comprising of

A10	turret plate
A25	inward gear
A31	Annulus plate
A32	sealed castor bearing
A39	steering sector gear
A38	DC motor

Figure 3: Side elevation of apparatus

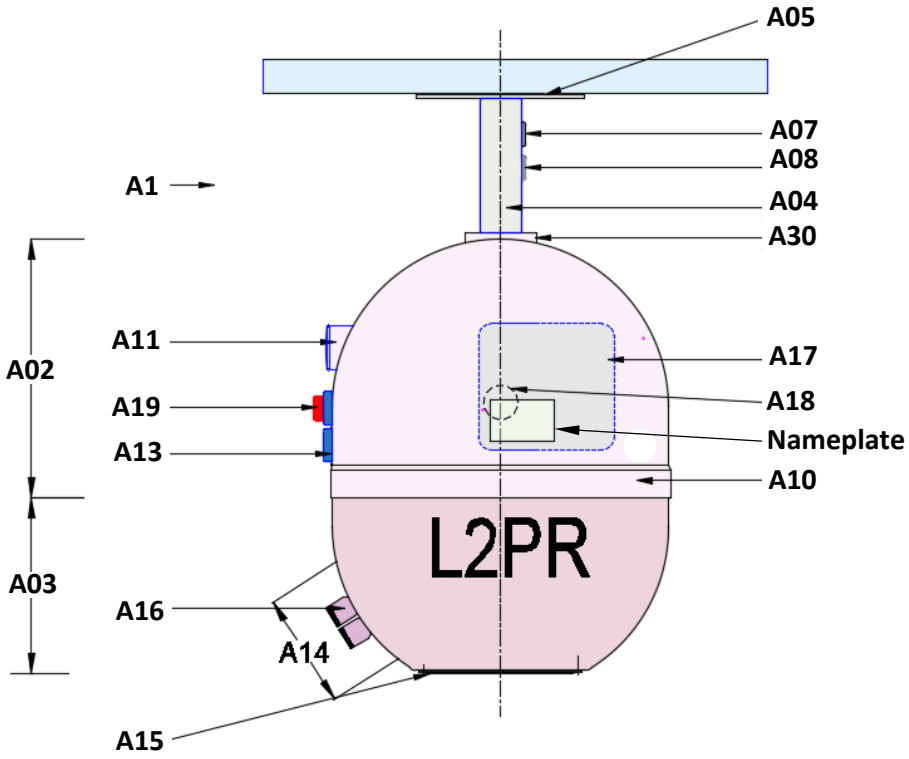

Figure 4: Section (exposed) view across side elevation of apparatus

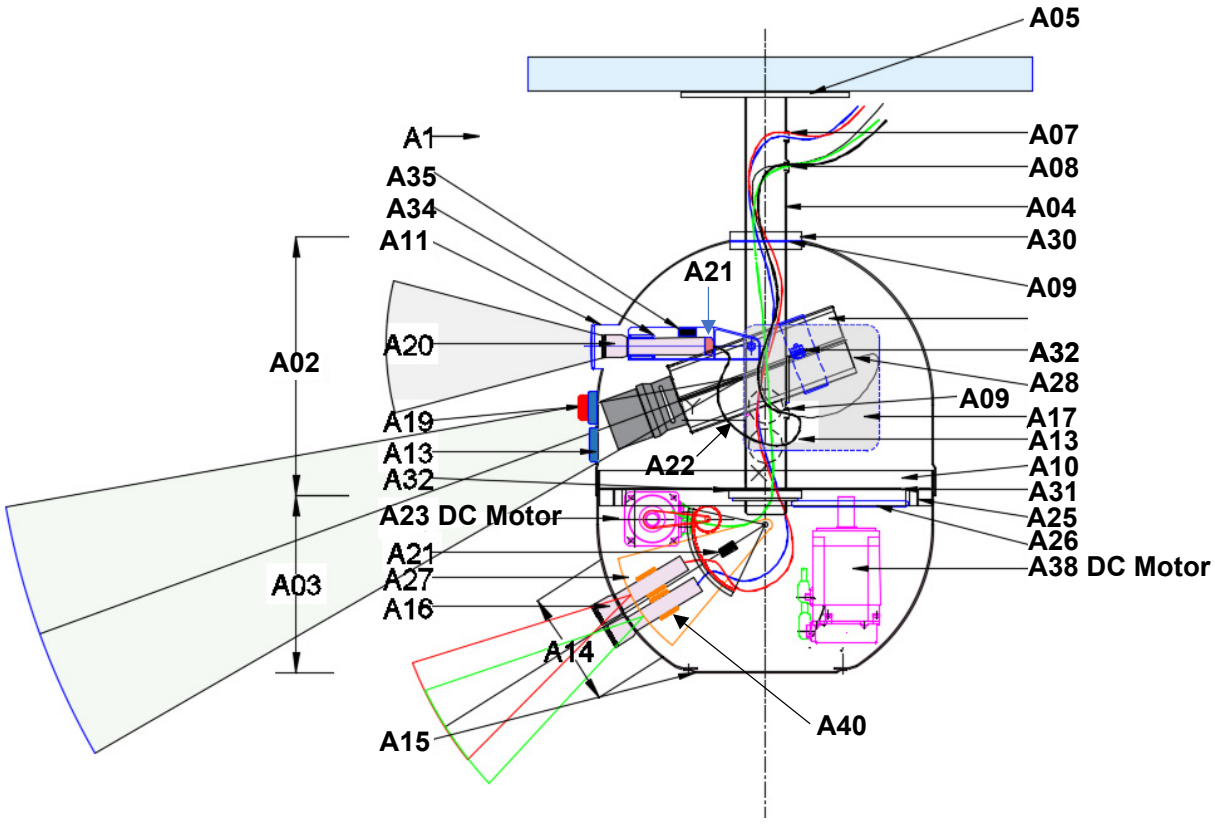

Drawings (cont'd)

Figure 5: Sectional (exposed) pan view of apparatus across turret base

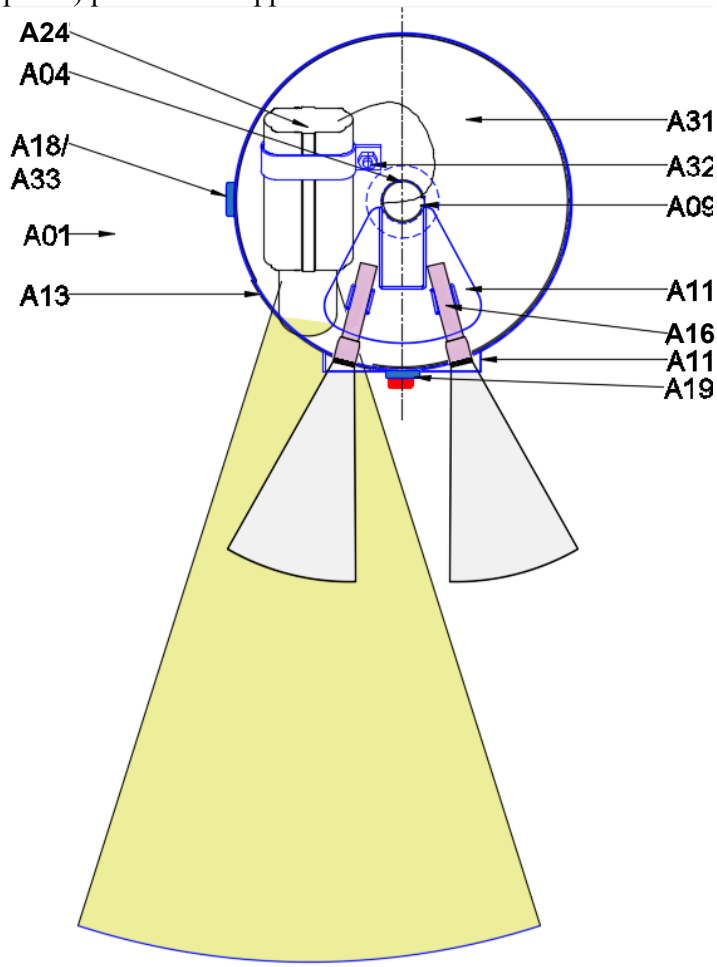

Figure 6: Sectional (exposed) pan view of apparatus across turret

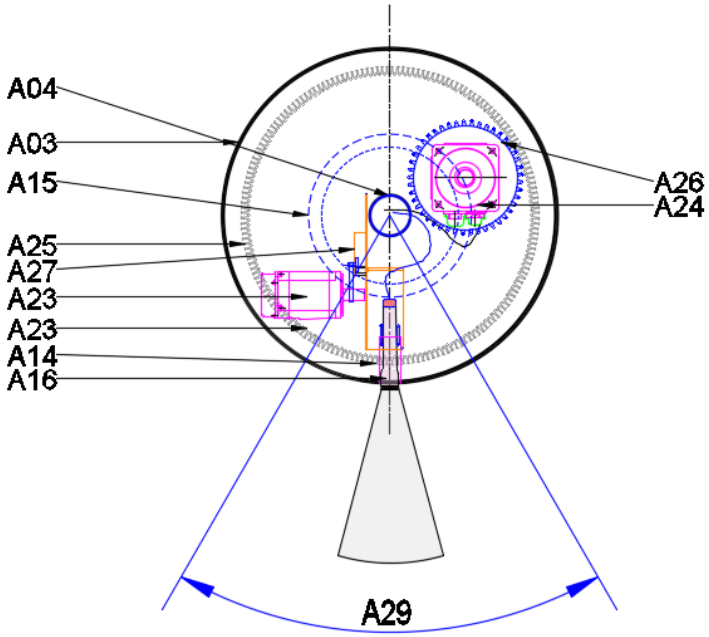

Figure 7: Section view of Area of Protection with single apparatus (Bounding Box illustrated)

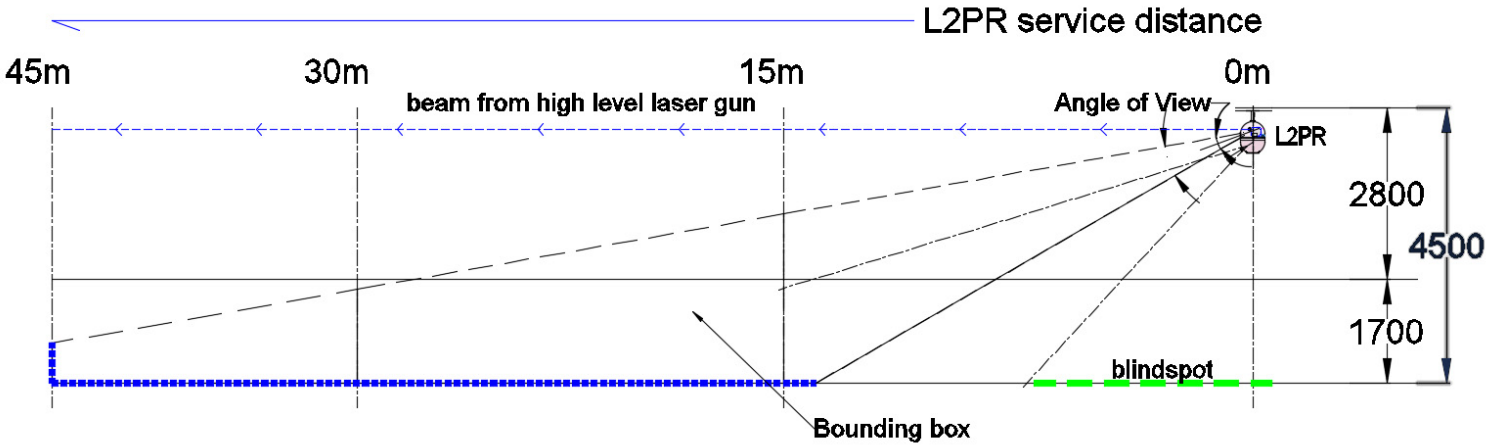

Figure 8: Plan view of Area of Protection (Camera lined to center of Bounding Box illustrated)

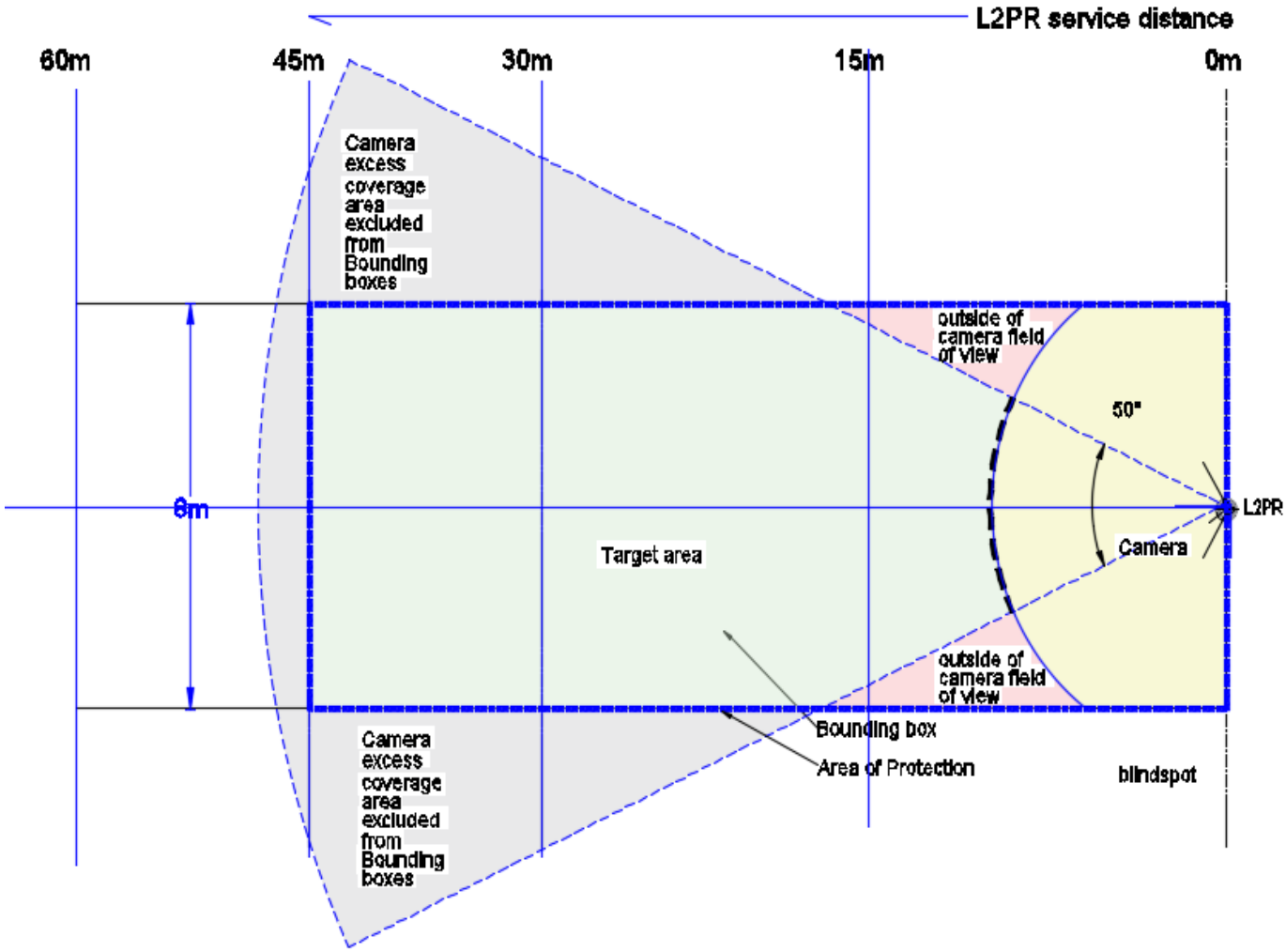

Drawings (cont'd)

Figure 9: Plan view of Area of Protection (Camera lined to edge of Bounding Box illustrated)

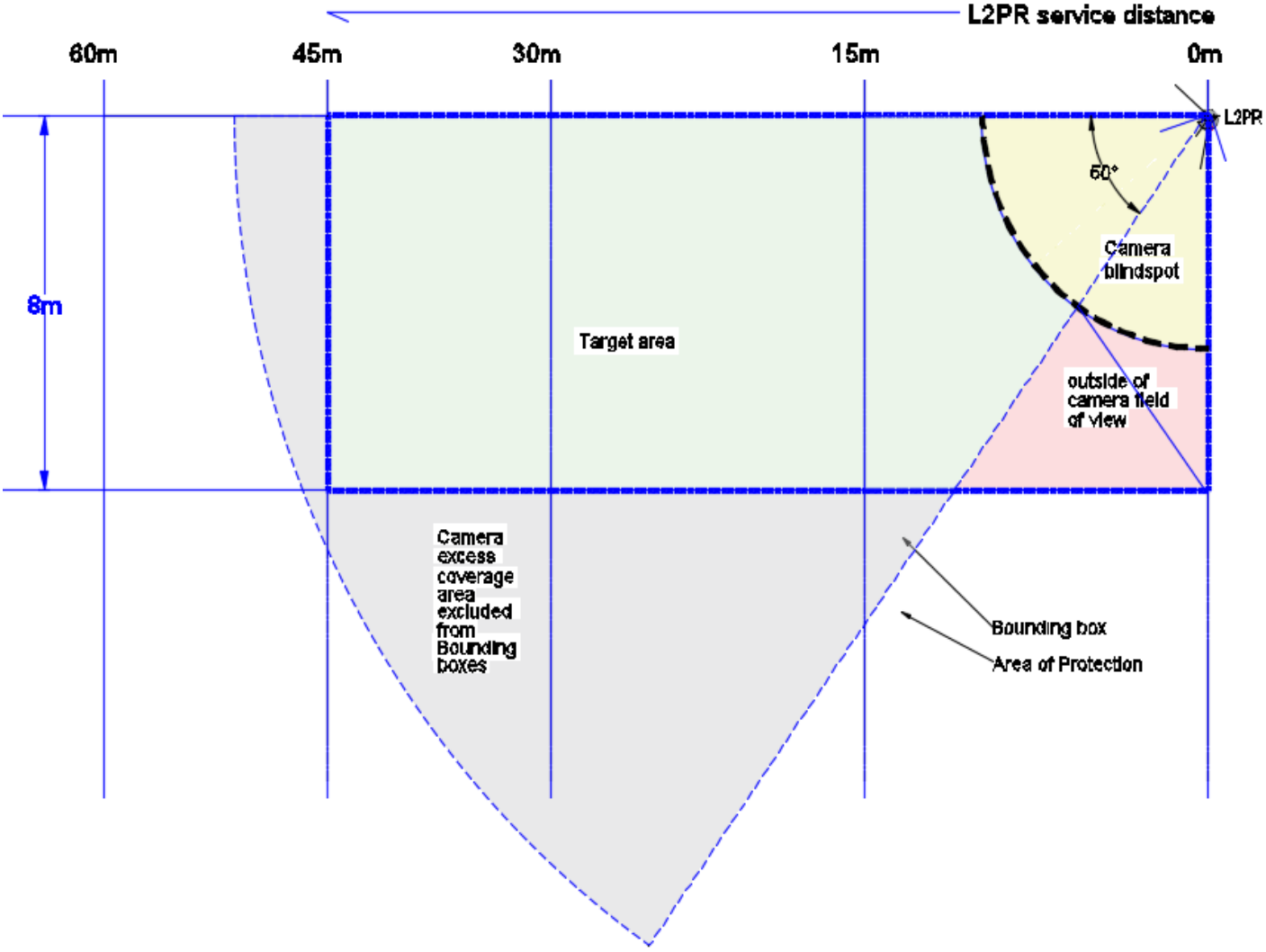

Figure 10: Section view of Area of Protection with two apparatus (Bounding Box illustrated)

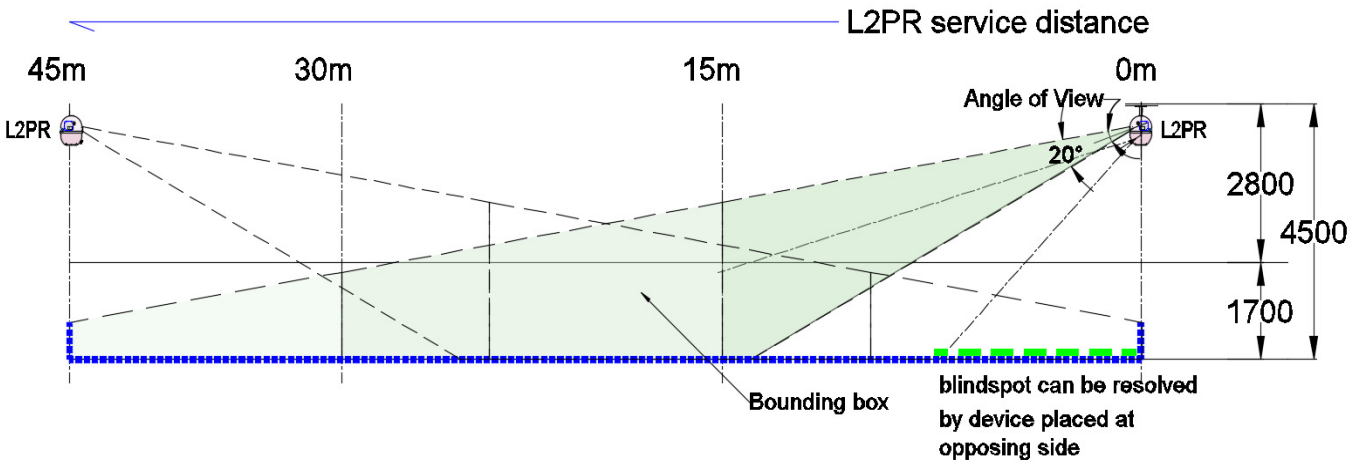

Figure 11: Plan view of Area of Protection with 2 apparatus (Bounding Box illustrated)

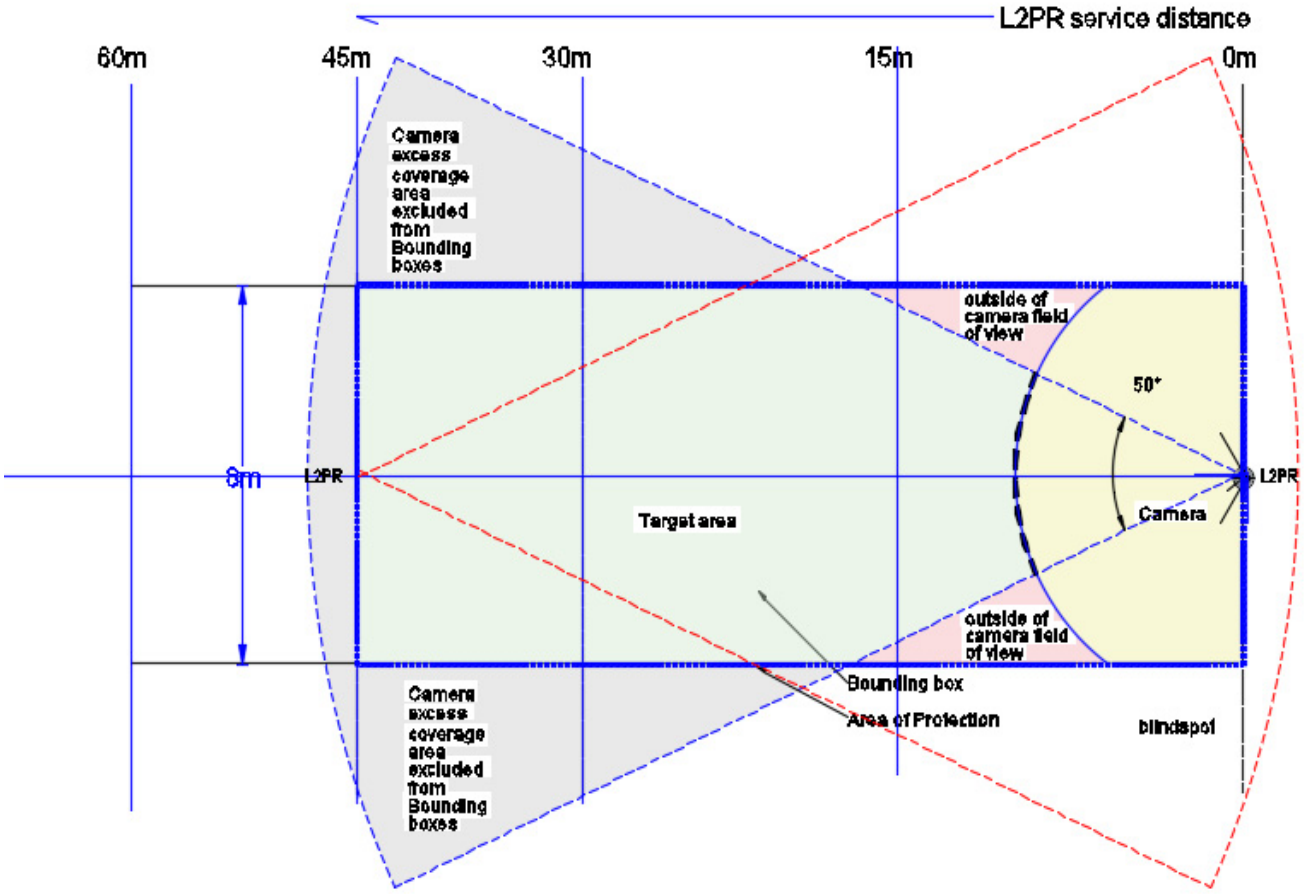

Figure 12: Section view of Area of Protection with Spot Target area (close distance illustrated)

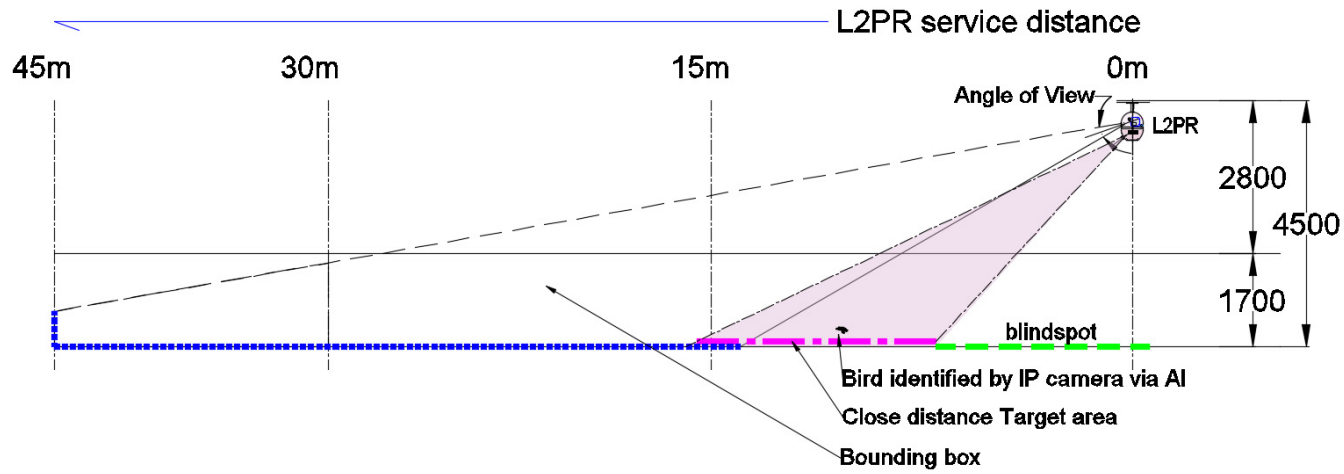

Drawings (cont'd)

Figure 13: Plan view of Area of Protection with Spot Target area (close distance target area illustrated)

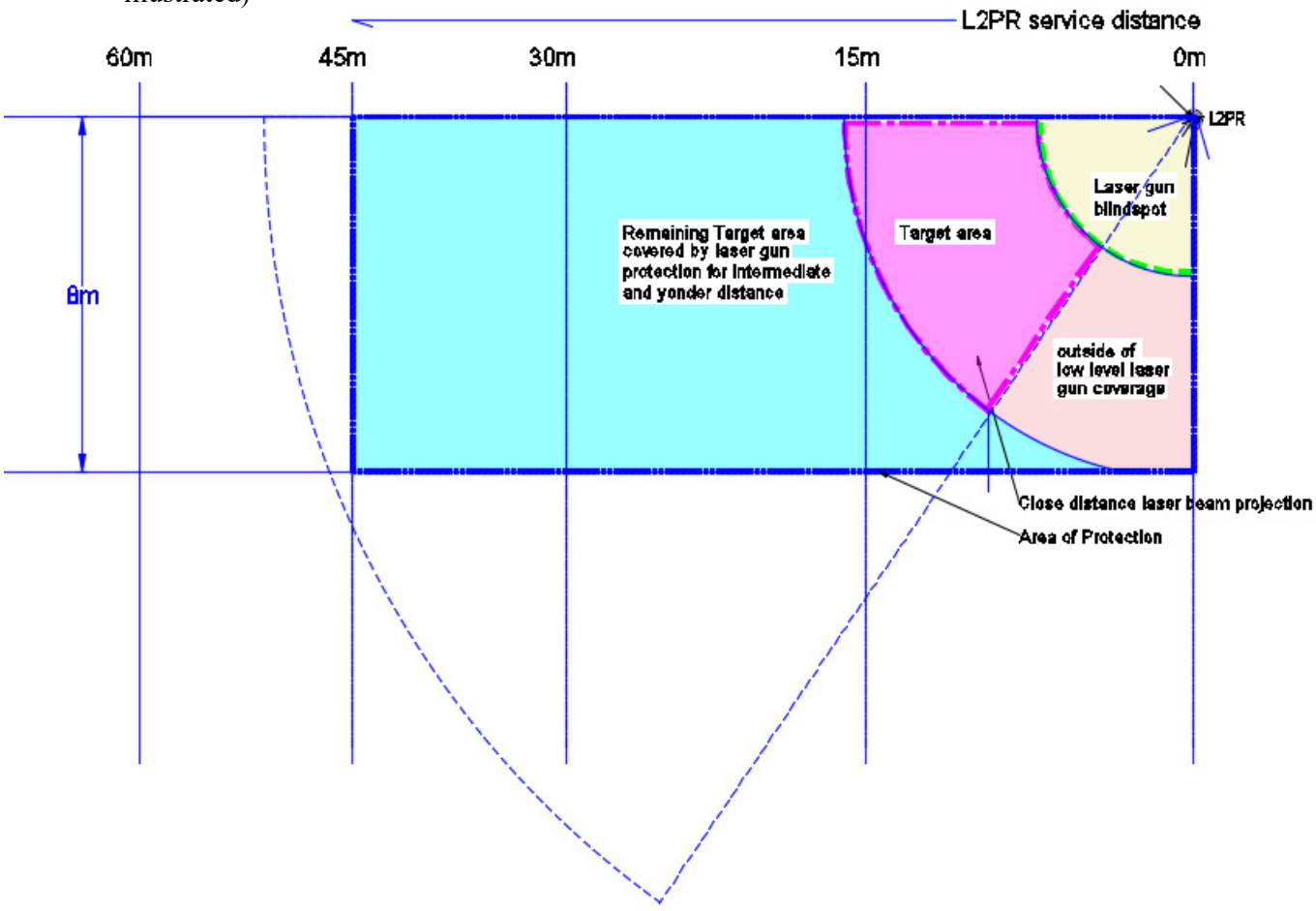

Figure 14 Section view of Area of Protection with Spot Target area (intermediate distance illustrated)

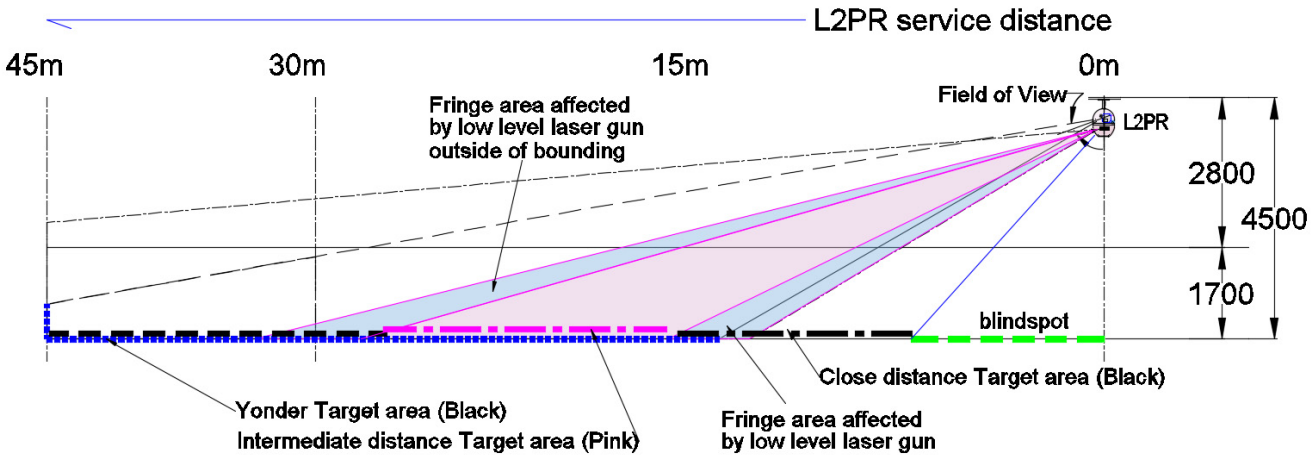

Drawings (cont'd)

Figure 15 Plan view of Area of Protection with Spot Target area (intermediate distance illustrated)

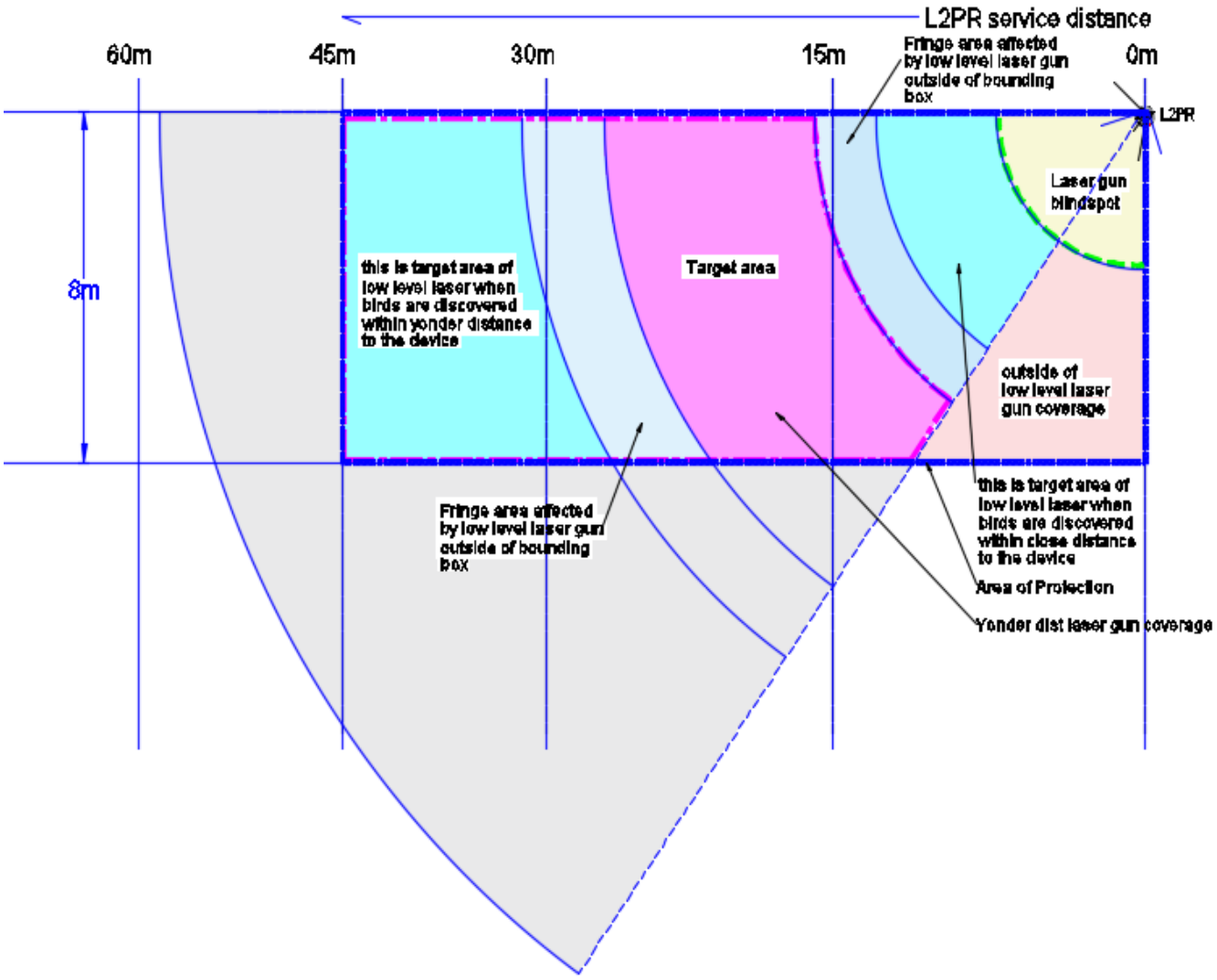

Figure 16 Section view of Area of Protection with Spot Target area (Yonder distance illustrated)

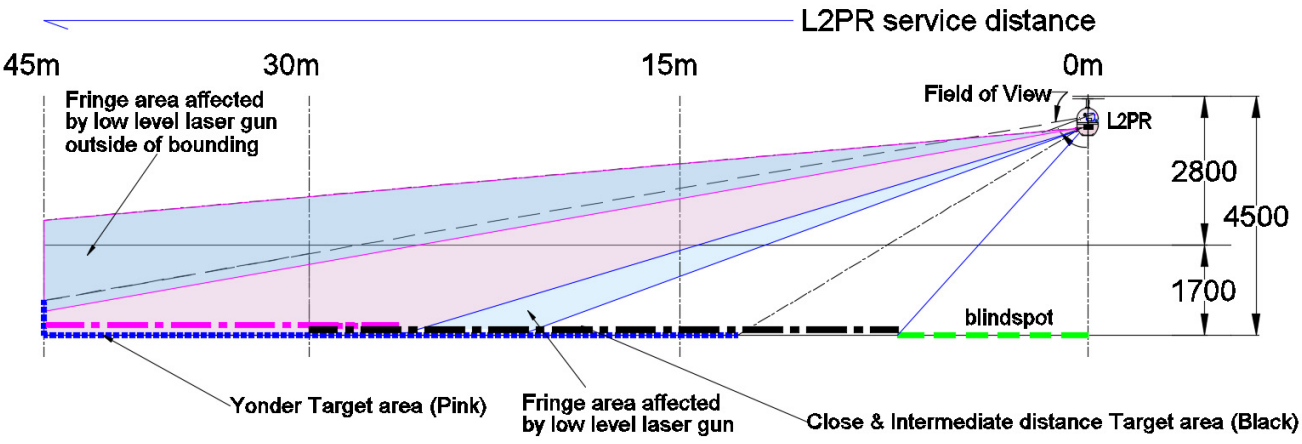

Figure 17 Plan view of Area of Protection with Spot Target area (Yonder distance illustrated)

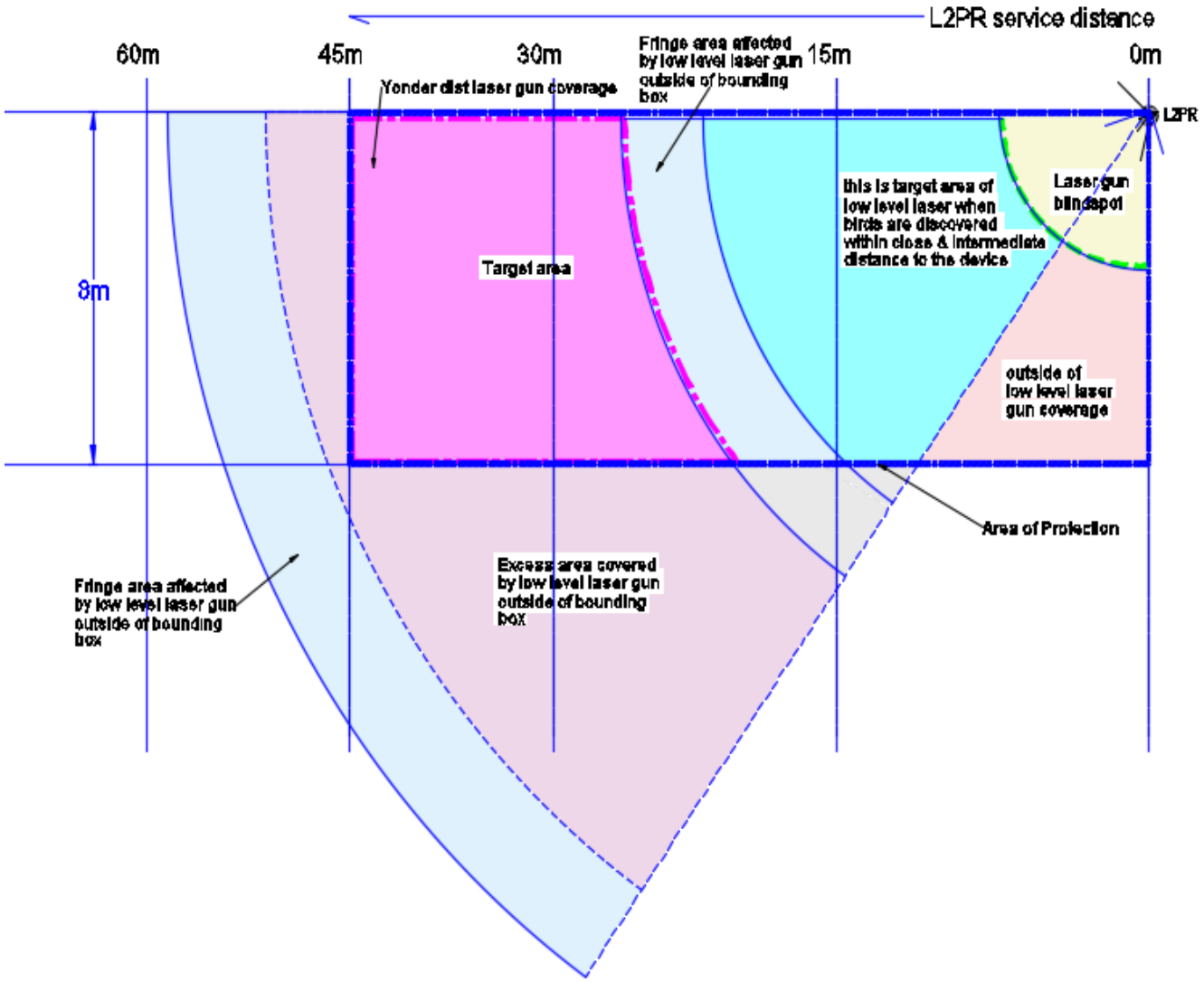

Figure 18 High level laser beam projection

