Fig.1

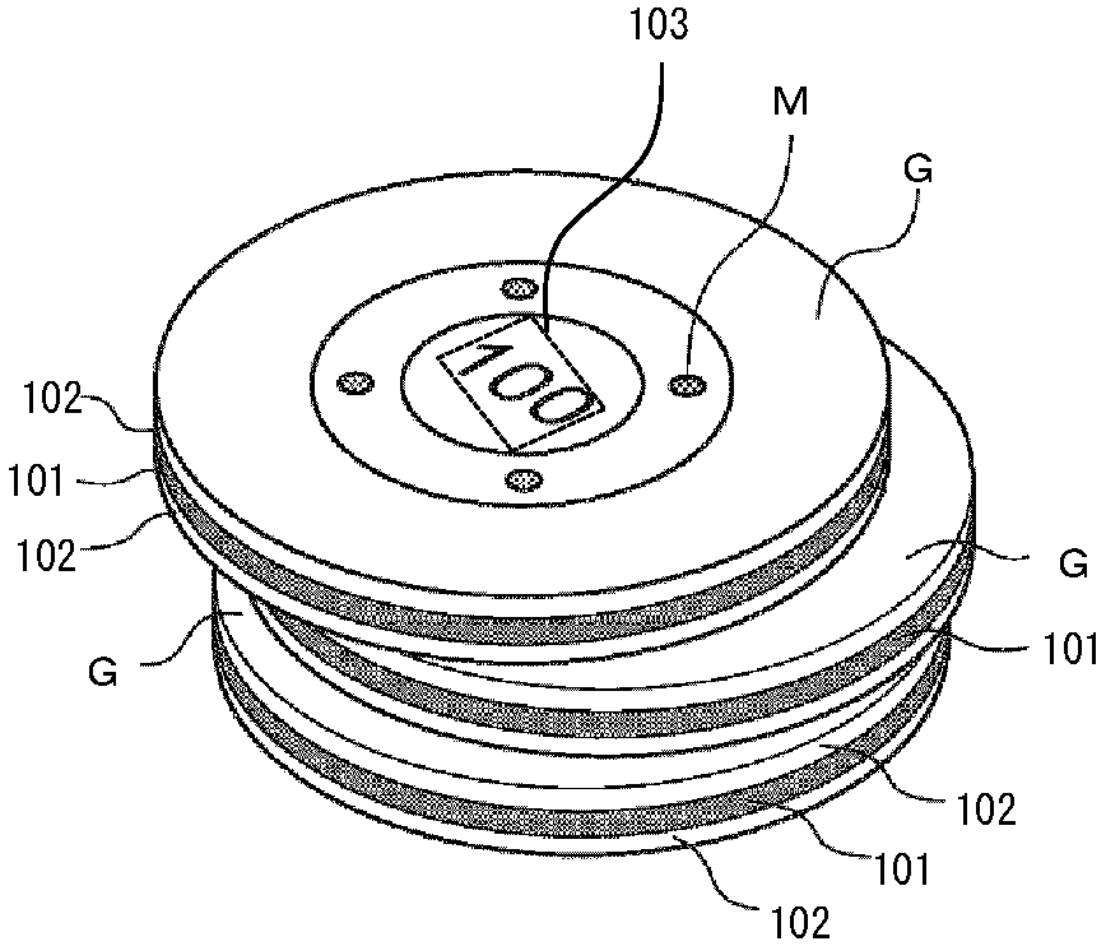

Fig.2

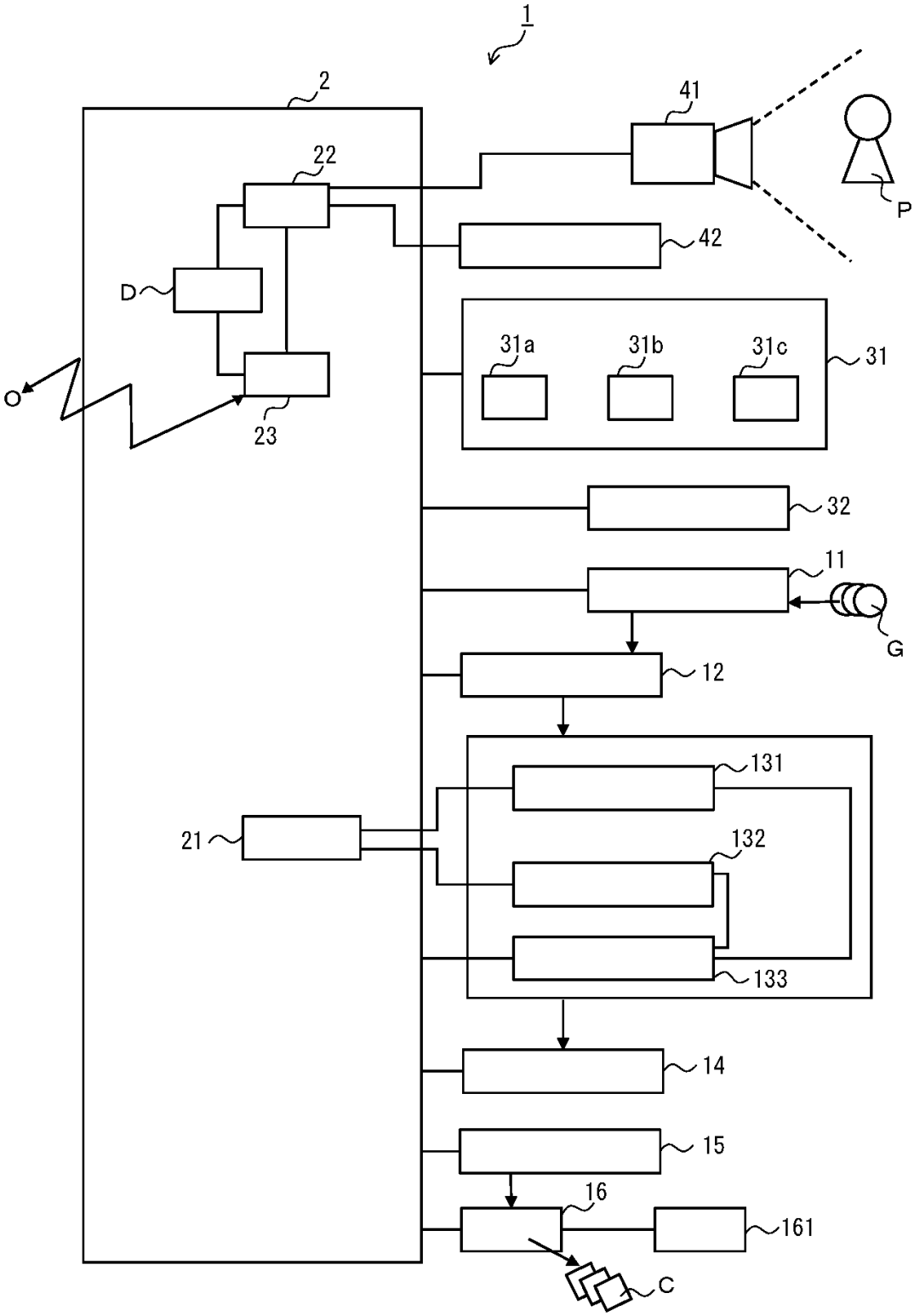
1
2
41
22
P
42
D
31a
31b
31c
31
O
23
32
11
G
12
131
21
132
133
14
15
16
161
C

Fig.3

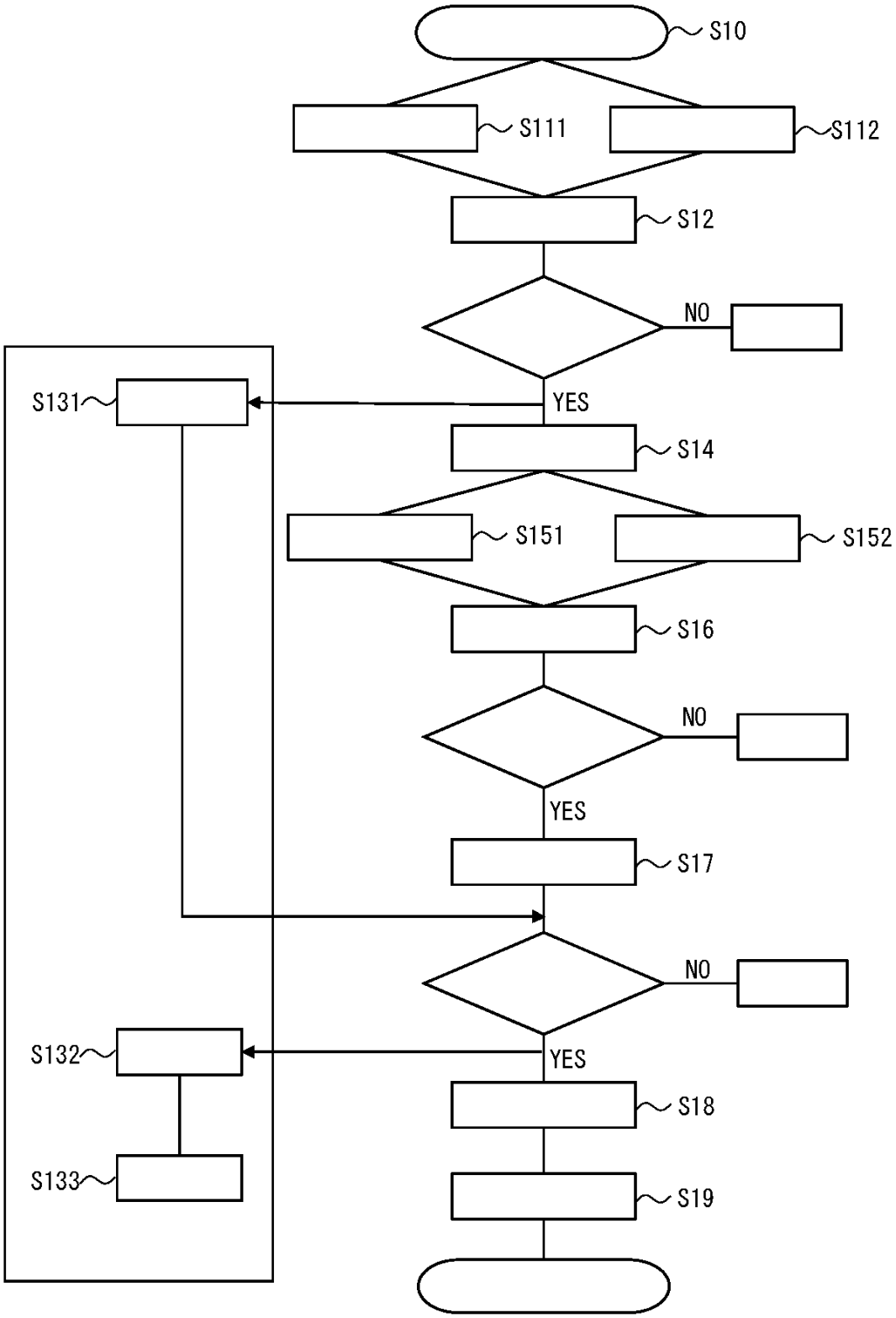
S10
S111
S112
S12
NO
S131
YES
S14
S151
S152
S16
NO
YES
S17
NO
S132
YES
S18
S133
S19

Fig.4

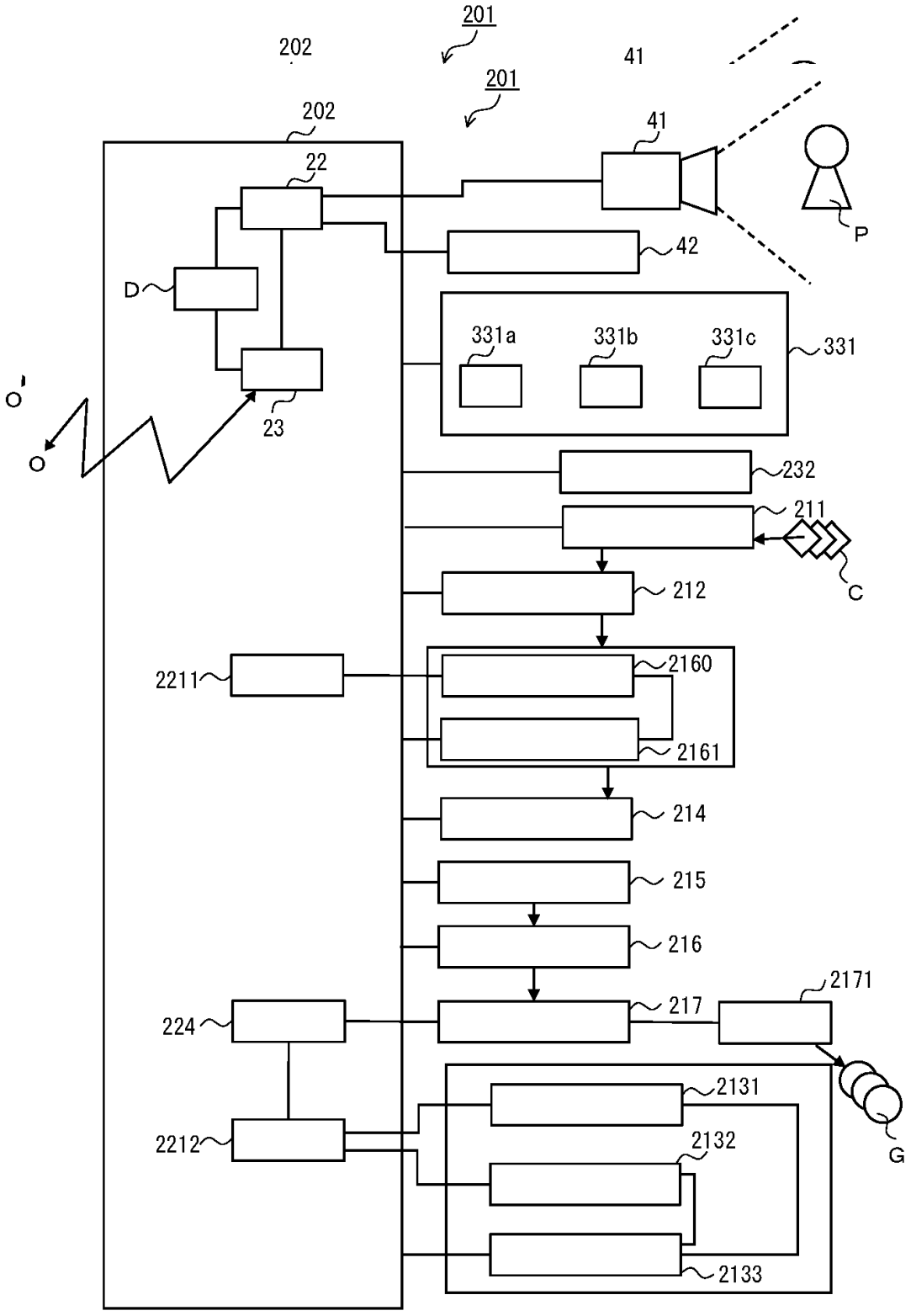
201
202
41
201
202
41
22
P
42
D
331a
331b
331c
331
O'
O
23
232
211
C
212
2211
2160
2161
214
215
216
2171
217
224
2131
2212
2132
G
2133

Fig.5

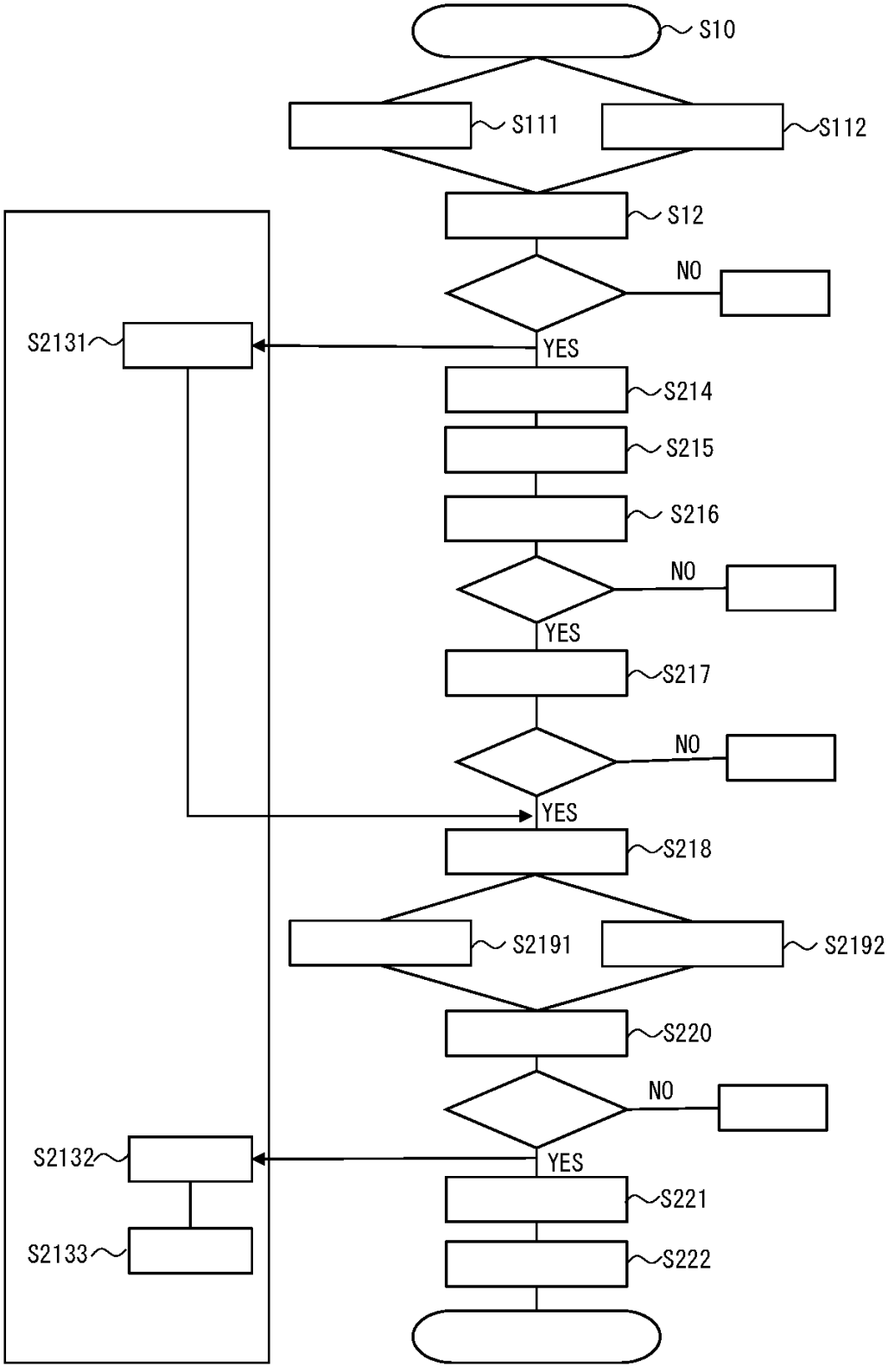
S10
S111
S112
S12
NO
S2131
YES
S214
S215
S216
NO
YES
S217
NO
YES
S218
S2191
S2192
S220
NO
S2132
YES
S221
S2133
S222

Fig.6

