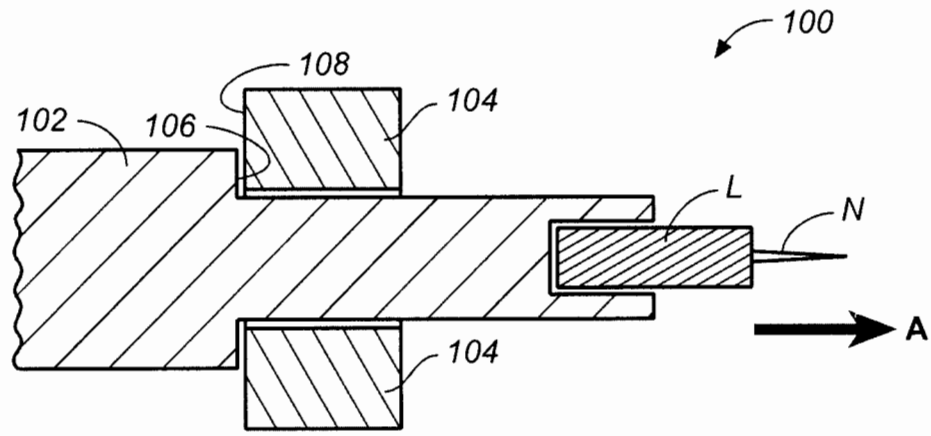

FIG. 1

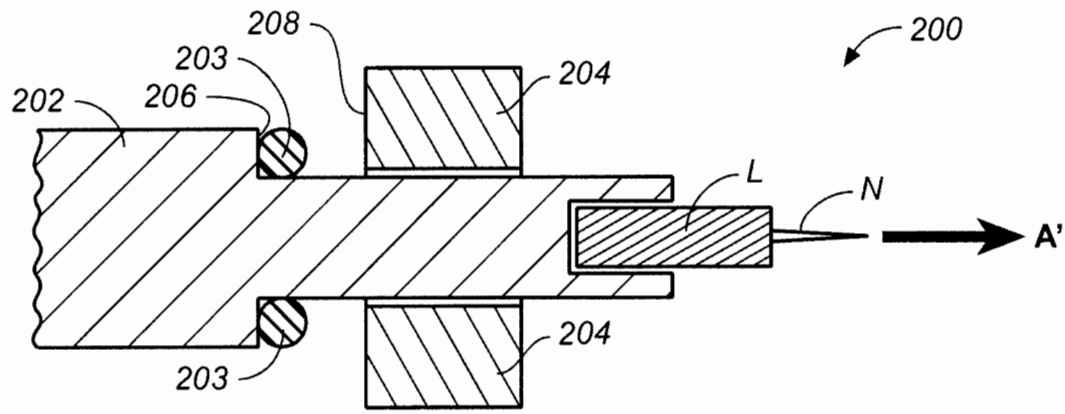

FIG. 2A

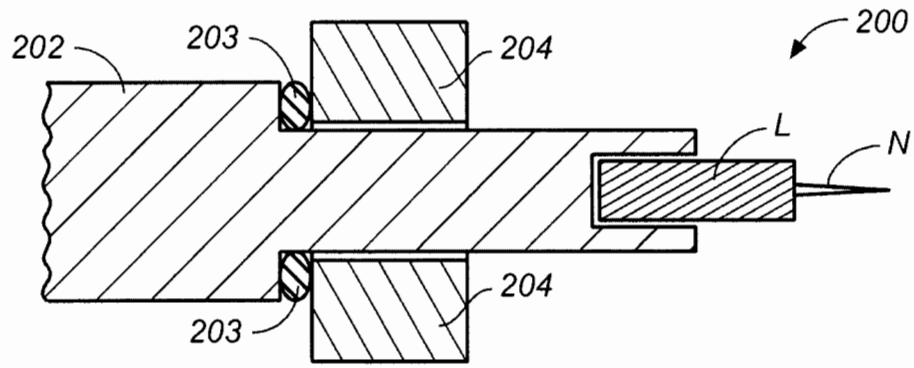

FIG. 2B

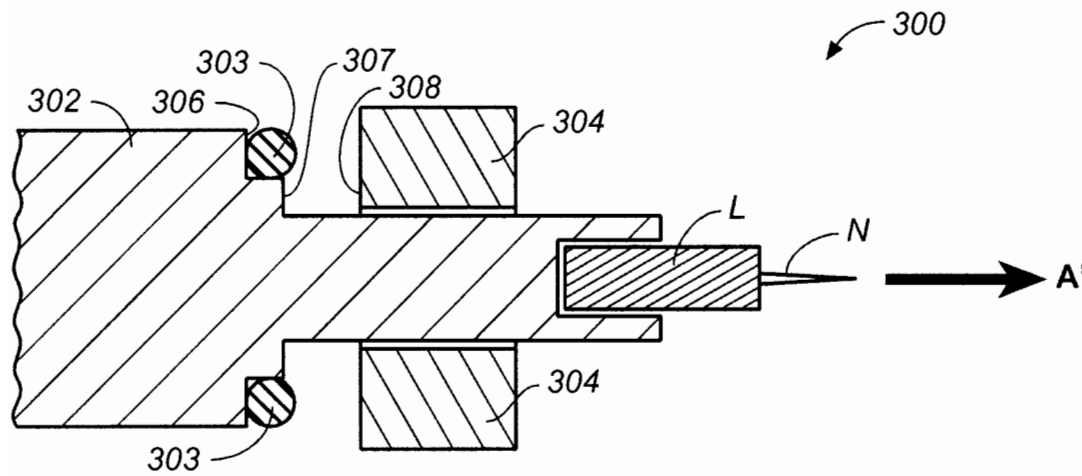
300
303
307
308
302
306
304
L
N
A"
304
303

FIG. 3A

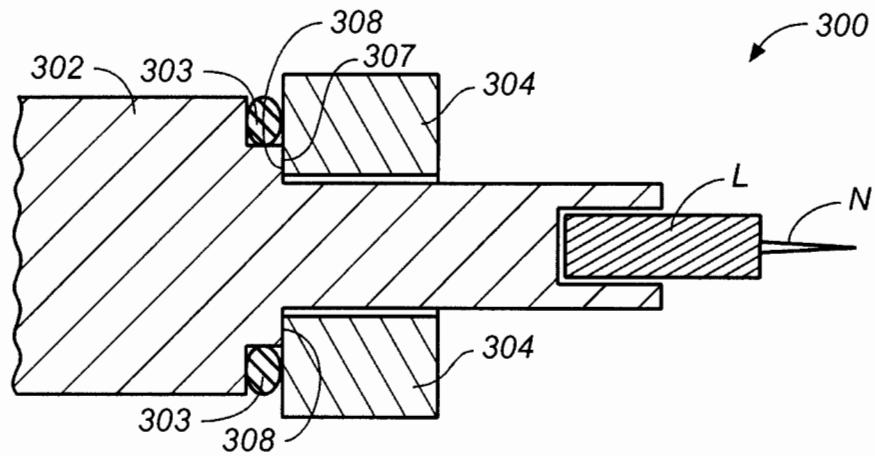
308
300
302
303
307
304
L
N
304
303
308

FIG. 3B

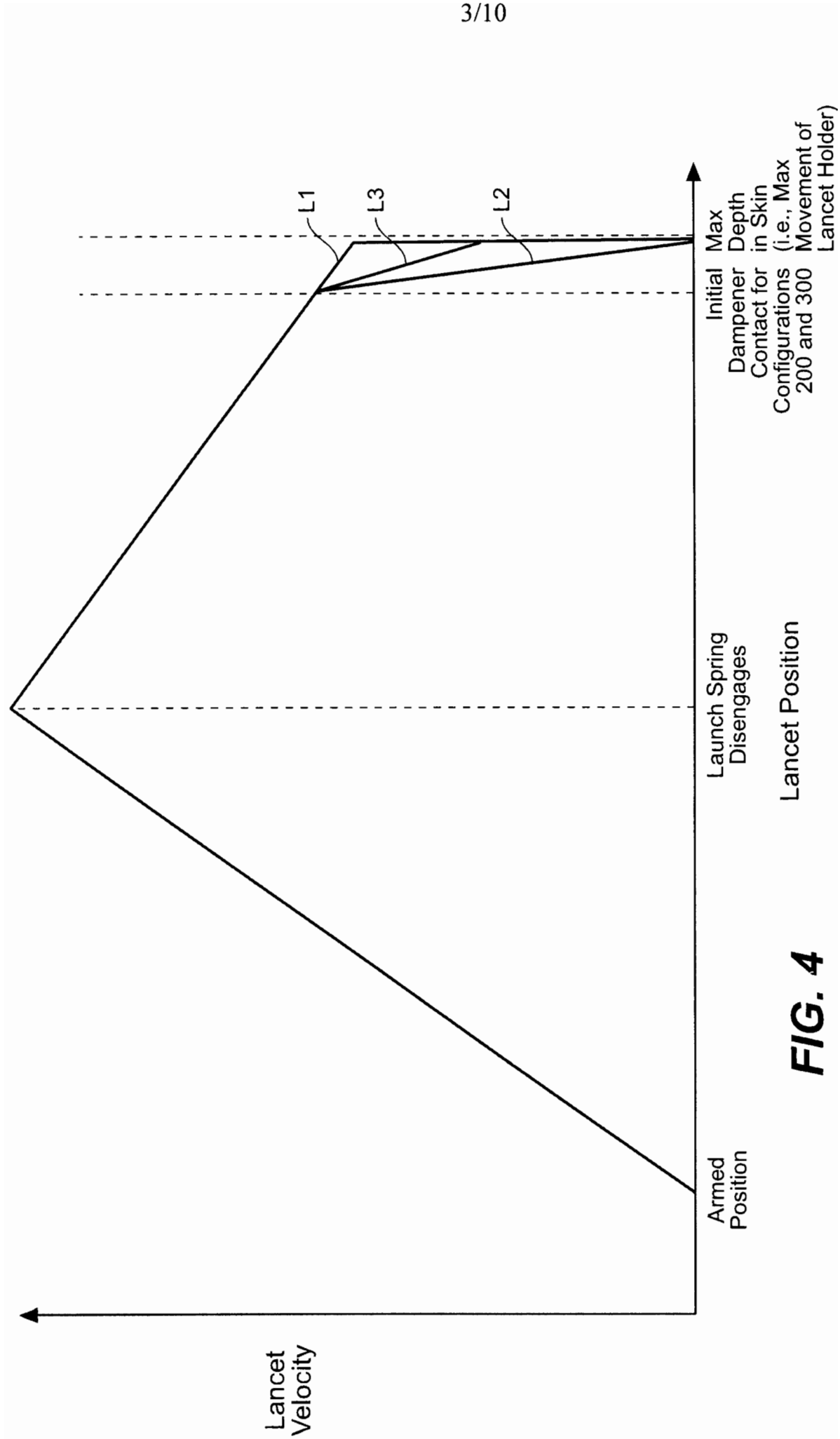
Lancet Velocity
Armed Position
Launch Spring Disengages
Lancet Position
Initial Dampener Contact for Configurations 200 and 300
Max Depth in Skin (i.e., Max Movement of Lancet Holder)
L1
L3
L2

FIG. 4

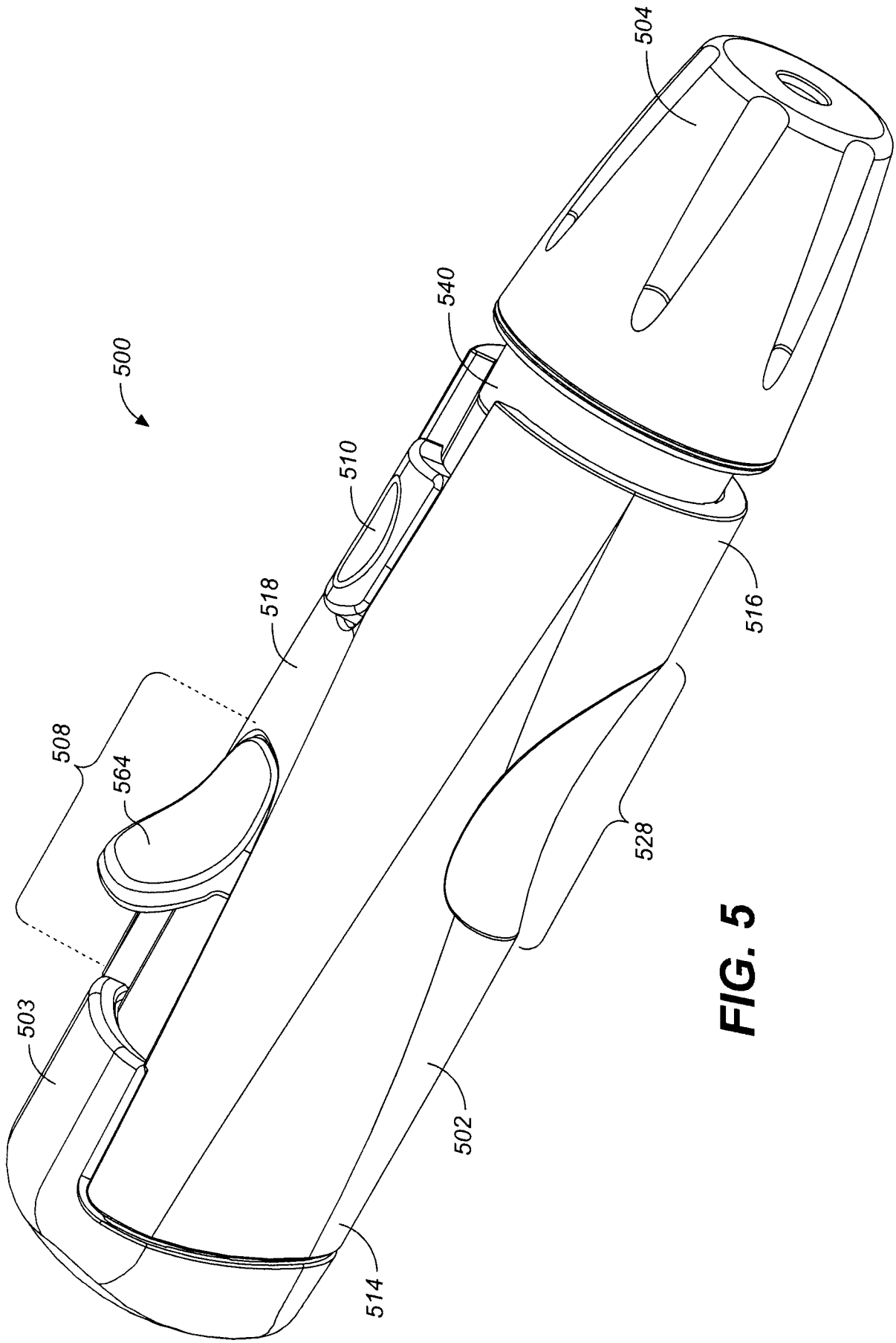

FIG. 5

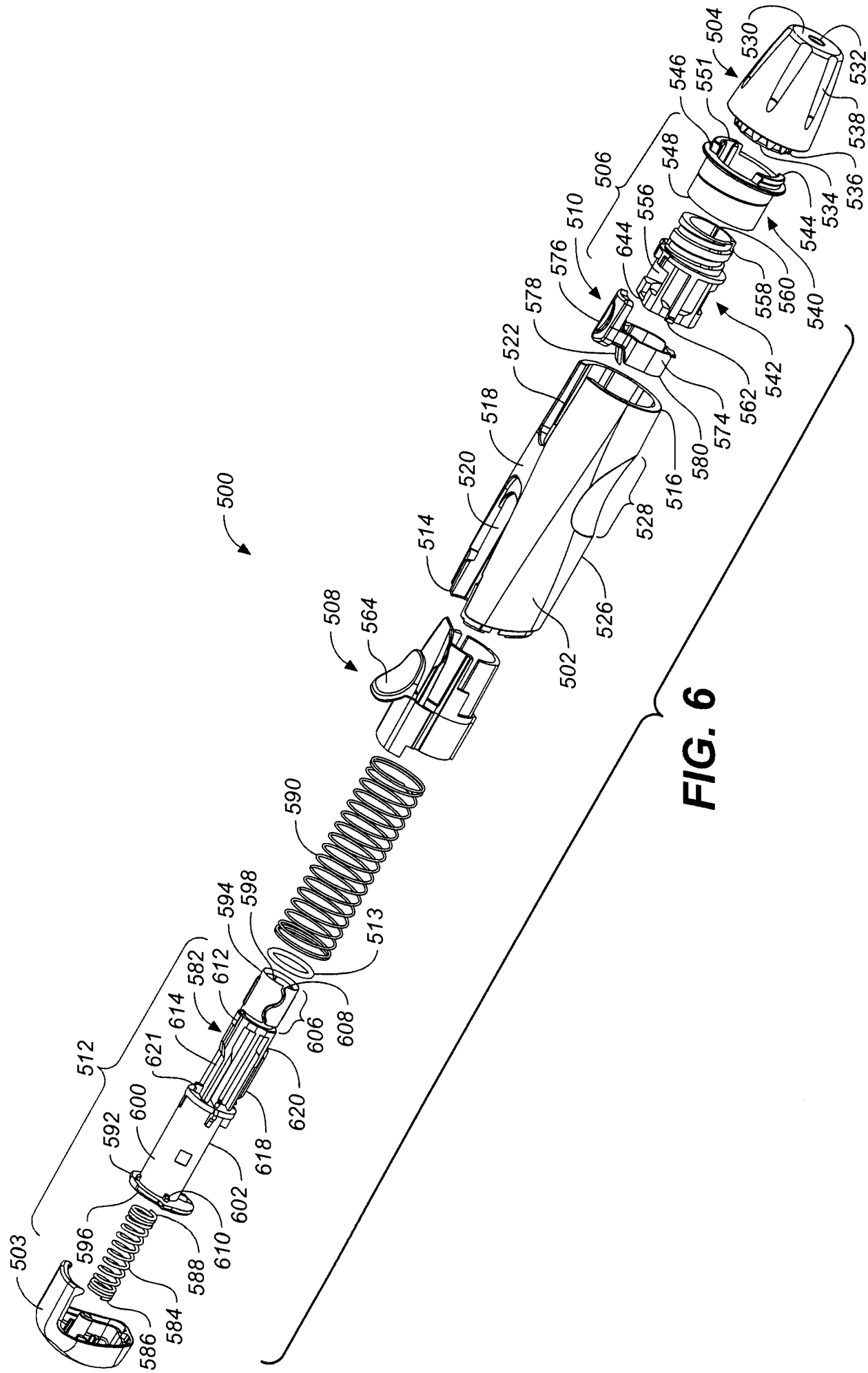
500
503
512
596
592
600
621
614
582
612
594
598
590
513
606
608
620
618
602
610
588
584
586
508
564
514
520
518
522
578
576
510
506
644
556
548
546
551
504
530
532
538
536
534
544
560
558
540
542
562
574
580
516
528
526
502

FIG. 6

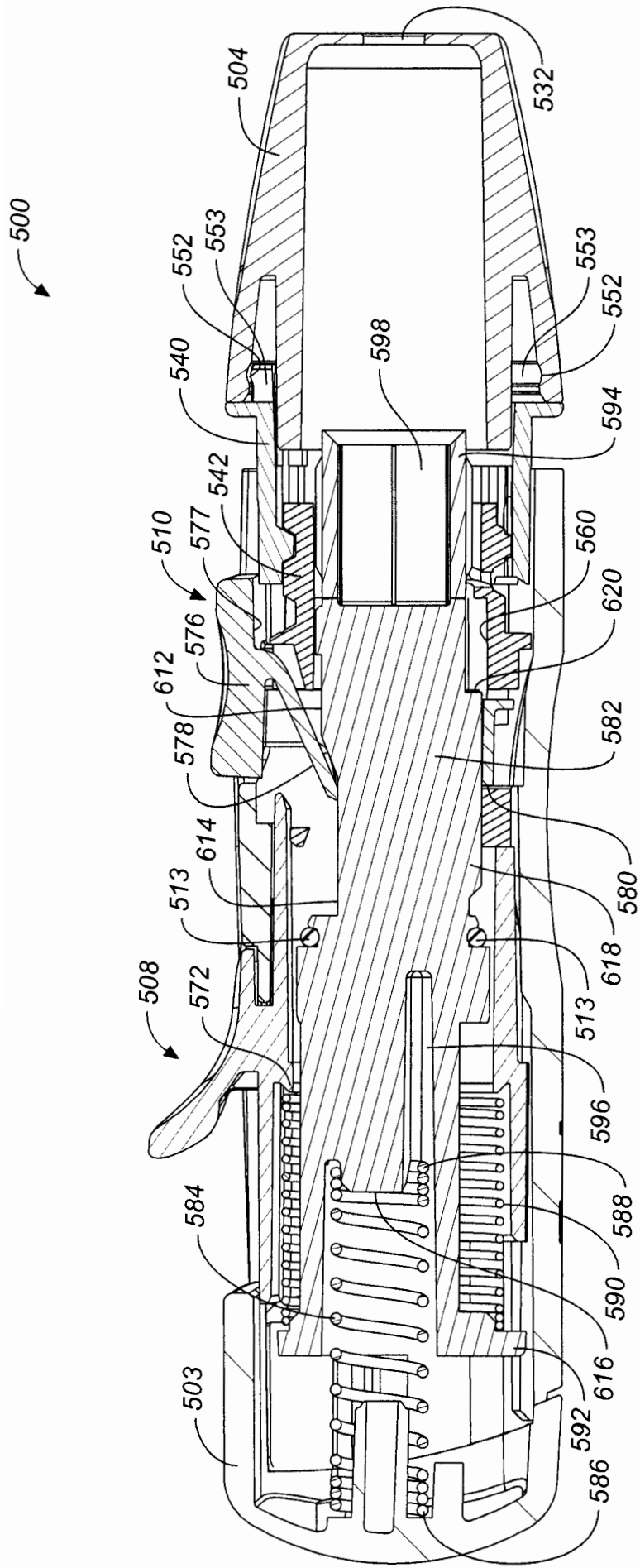
500
504
532
553
552
540
598
594
542
577
510
560
620
576
612
582
578
614
580
513
618
508
572
596
584
588
590
616
503
592
586

FIG. 7

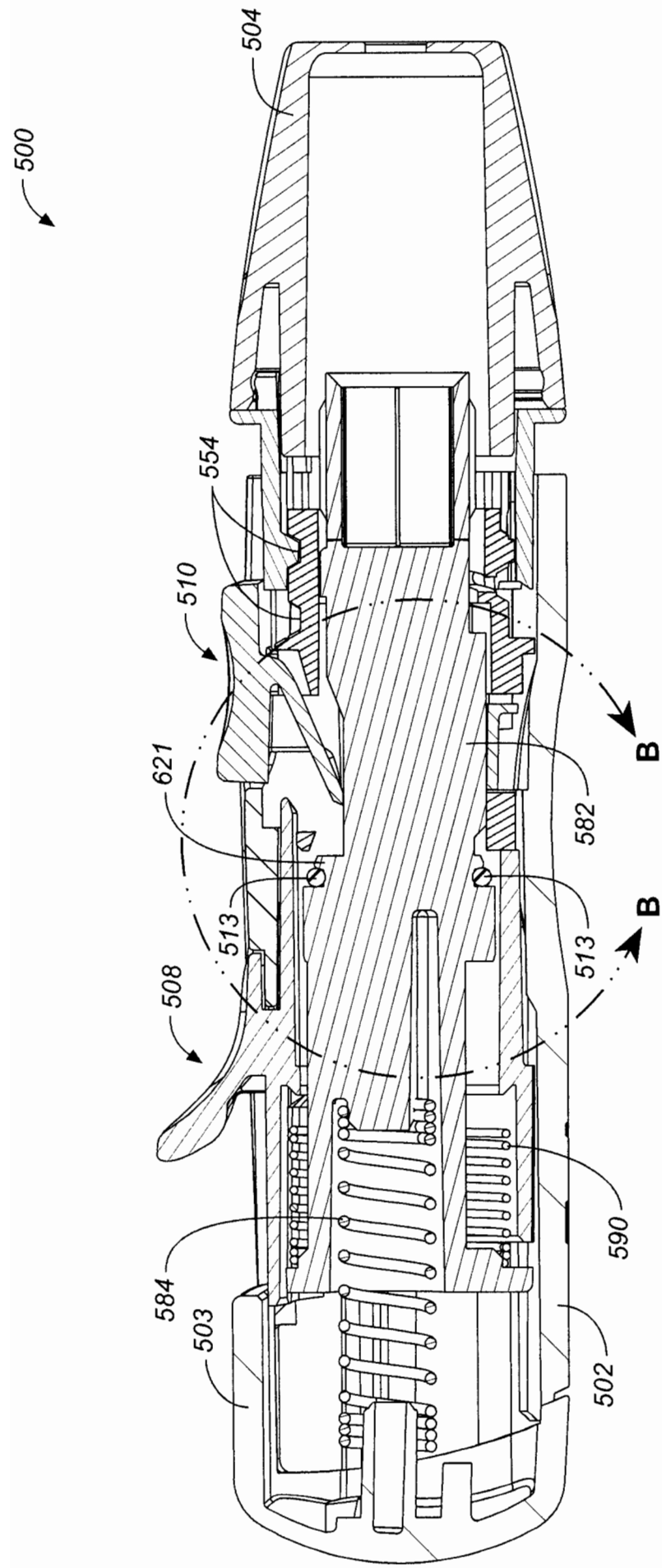

FIG. 8

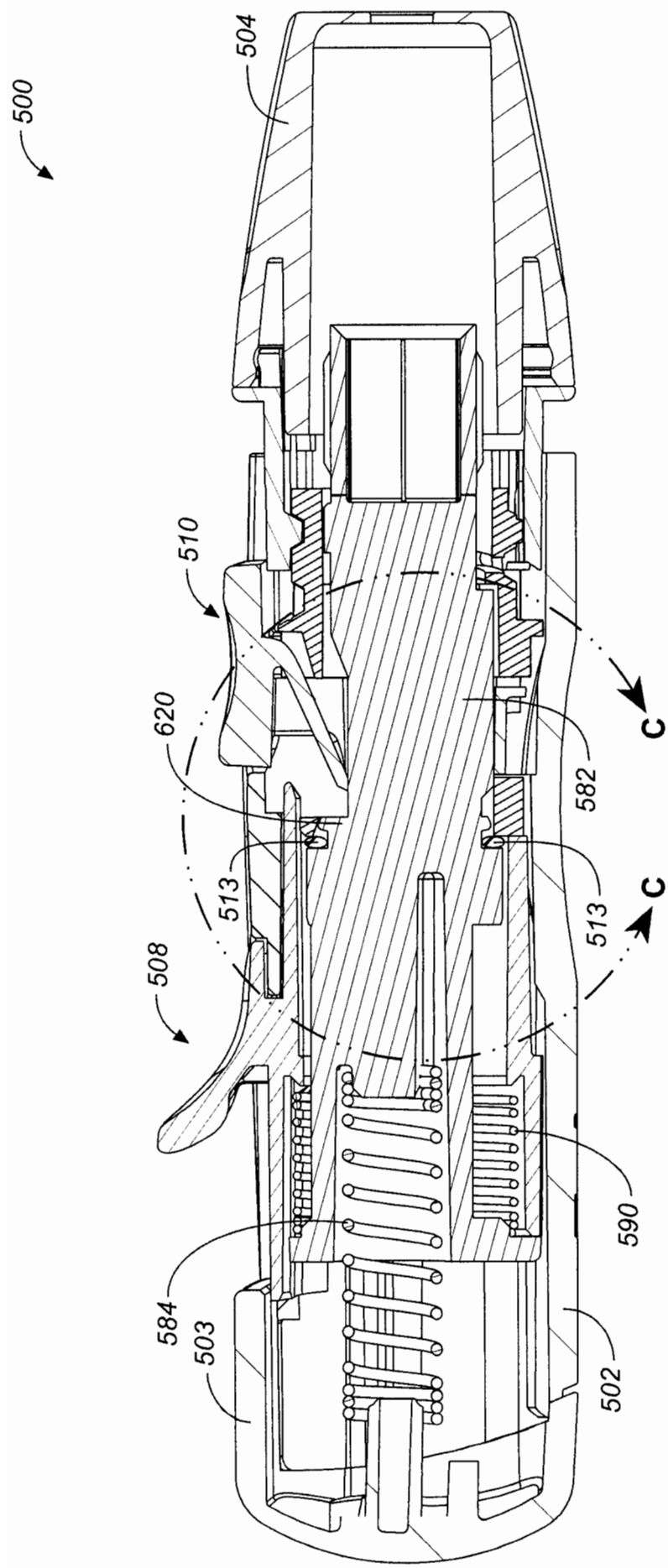

FIG. 9

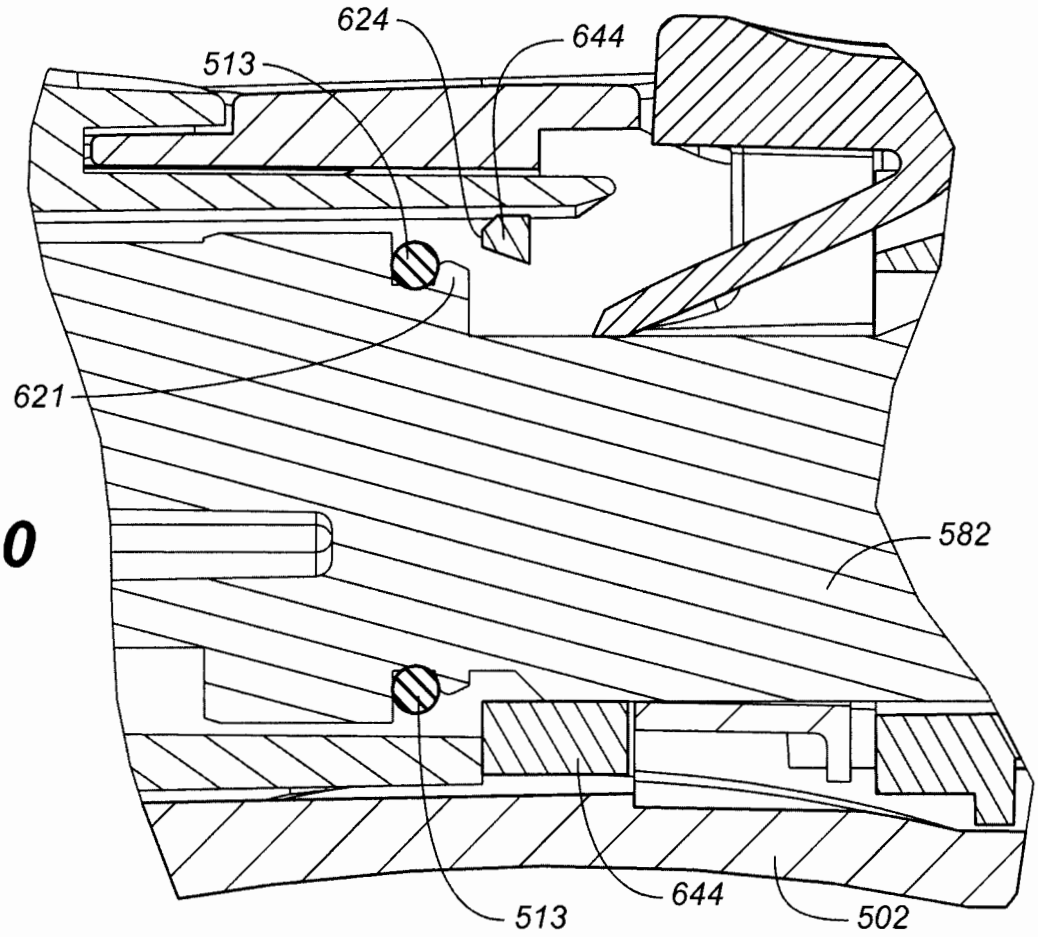

FIG. 10

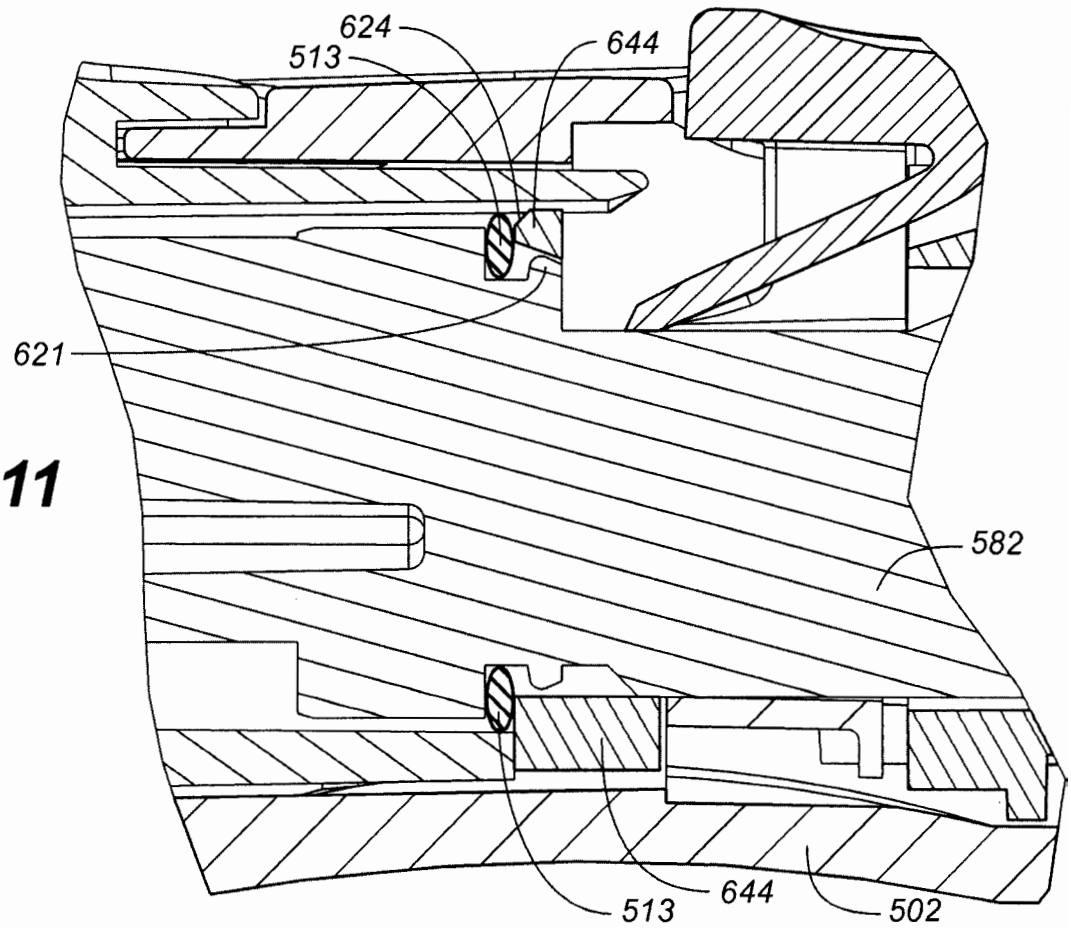

FIG. 11

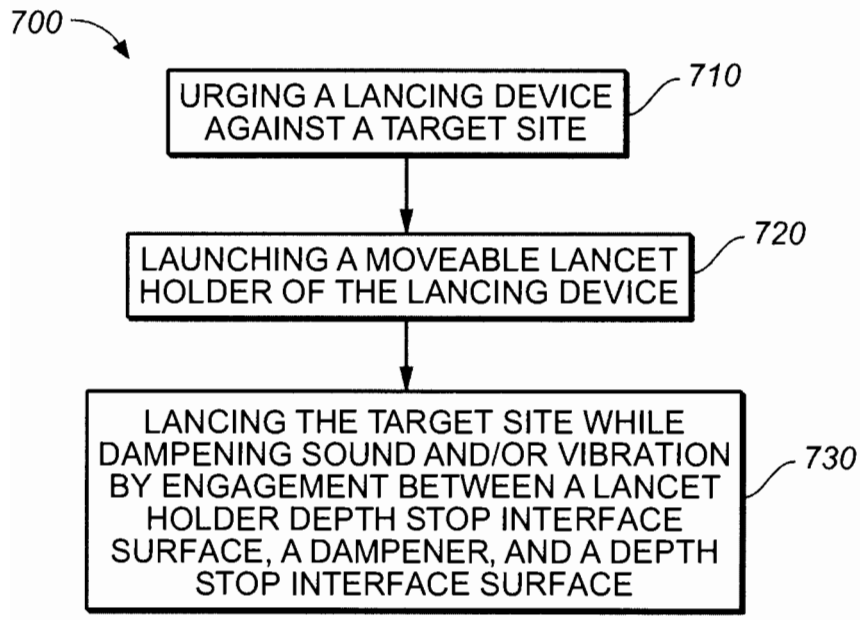
700
URGING A LANCING DEVICE AGAINST A TARGET SITE
710
LAUNCHING A MOVEABLE LANCET HOLDER OF THE LANCING DEVICE
720
LANCING THE TARGET SITE WHILE DAMPENING SOUND AND/OR VIBRATION BY ENGAGEMENT BETWEEN A LANCET HOLDER DEPTH STOP INTERFACE SURFACE, A DAMPENER, AND A DEPTH STOP INTERFACE SURFACE
730

FIG. 12