200000627-0

PCT

WORLD INTELLECTUAL PROPERTY ORGANIZATION
International Bureau

INTERNATIONAL APPLICATION PUBLISHED UNDER THE PATENT COOPERATION TREATY (PCT)

(51) International Patent Classification 6 :
B25B 21/00

A1

(11) International Publication Number: WO 00/05036

(43) International Publication Date: 3 February 2000 (03.02.00)

(21) International Application Number: PCT/US99/14928

(22) International Filing Date: 1 July 1999 (01.07.99)

(30) Priority Data:
09/119,683 21 July 1998 (21.07.98) US

(71) Applicant: SNAP-ON TOOLS COMPANY [US/US]; 2801 – 80th Street, Kenosha, WI 53141–1410 (US).

(72) Inventors: PUSATERI, Daniel, S.; 353 Fairfax Lane, Grayslake, IL 60030 (US). BREHM, James, R.; 2423 Monroe Avenue, Racine, WI 53405 (US). BEER, Joshua, M.; 2770 Chicory Road, Racine, WI 53403 (US).

(74) Agent: STOTLAND, Harold, V.; Emrich & Dithmar, Suite 3000, 300 So. Wacker Drive, Chicago, IL 60606 (US).

(81) Designated States: AL, AM, AT, AU, AZ, BA, BB, BG, BR, BY, CA, CH, CN, CU, CZ, DE, DK, EE, ES, FI, GB, GE, GH, GM, HU, ID, IL, IS, JP, KE, KG, KP, KR, KZ, LC, LK, LR, LS, LT, LU, LV, MD, MG, MK, MN, MW, MX, NO, NZ, PL, PT, RO, RU, SD, SE, SG, SI, SK, SL, TJ, TM, TR, TT, UA, UG, UZ, VN, YU, ZW, European patent (AT, BE, CH, CY, DE, DK, ES, FI, FR, GB, GR, IE, IT, LU, MC, NL, PT, SE).

Published
*With international search report.*

(54) Title: PNEUMATIC TOOL WITH INCREASED POWER CAPABILITY

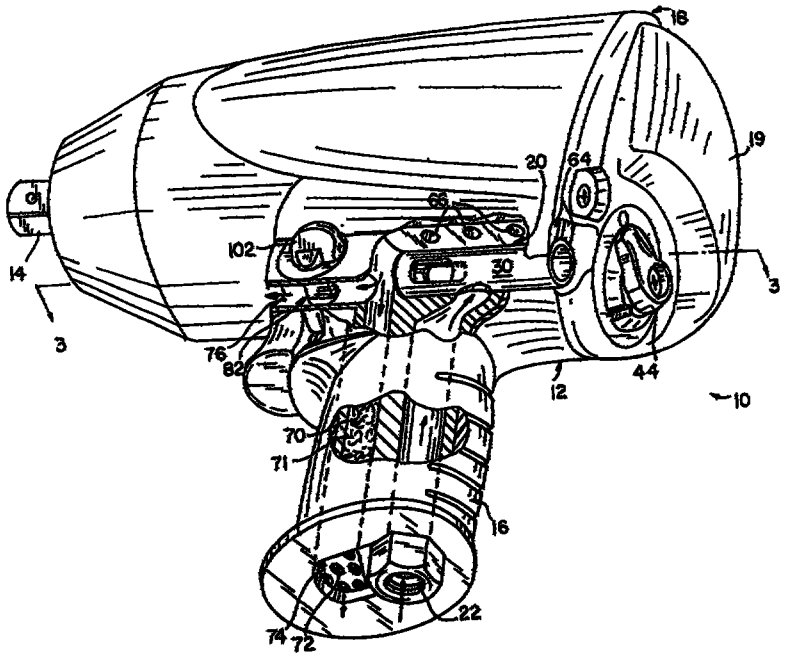


(57) Abstract

A pneumatic tool (10) includes a housing (12) defining an air inlet (22) and first (70) and second (76) exhaust passages and an air motor (20) fluidly coupled to the air inlet (22) and disposed in the housing (12). The motor (20) produces exhaust air in operation and is fluidly coupled to the first and second exhaust passages (70, 76). The tool (10) also includes an exhaust valve (84) for selectively opening and closing only the second exhaust passage (76).