Fig. 1

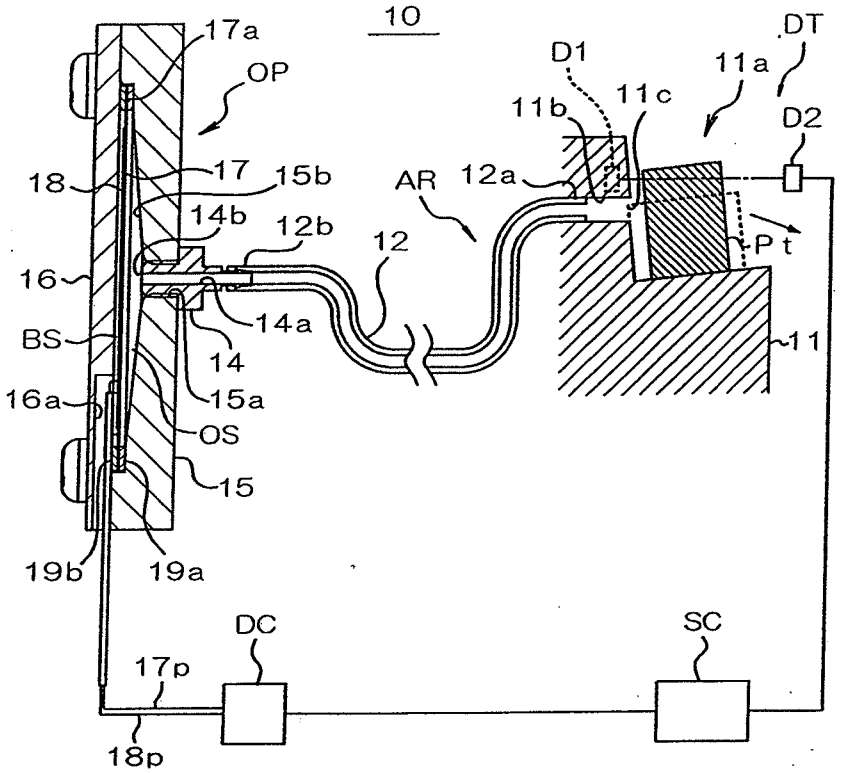
10
17a
OP
18
17
15b
14b
12b
16
14a
BS
14
16a
15a
OS
15
19b
19a
DC
17p
18p
SC
12
AR
12a
D1
11b
11c
11a
DT
D2
Pt
11

Fig. 2

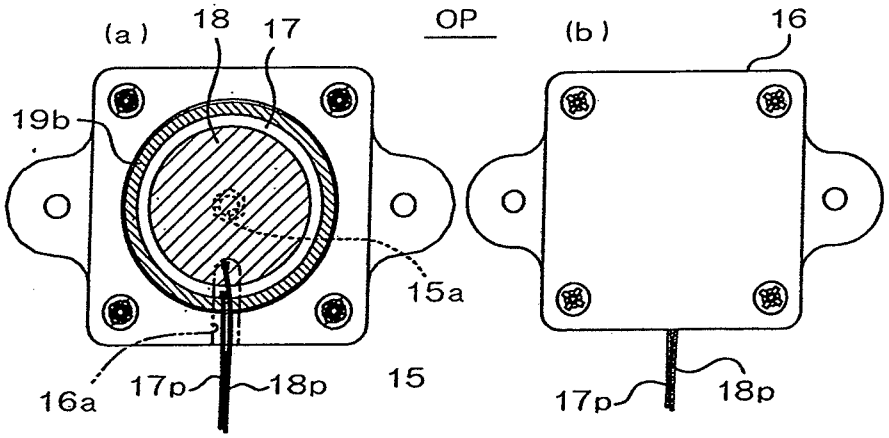
(a)
18
17
OP
(b)
16
19b
15a
16a
17p
18p
15
17p
18p

Fig. 3

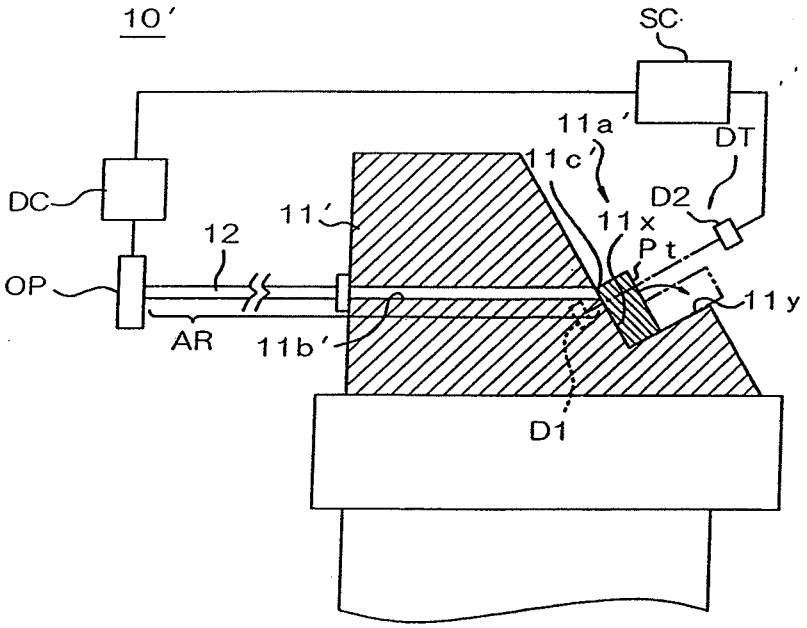
10′
SC
11a′
DT
11c′
DC
D2
11′
11x
12
Pt
OP
11y
AR
11b′
D1

Fig. 4

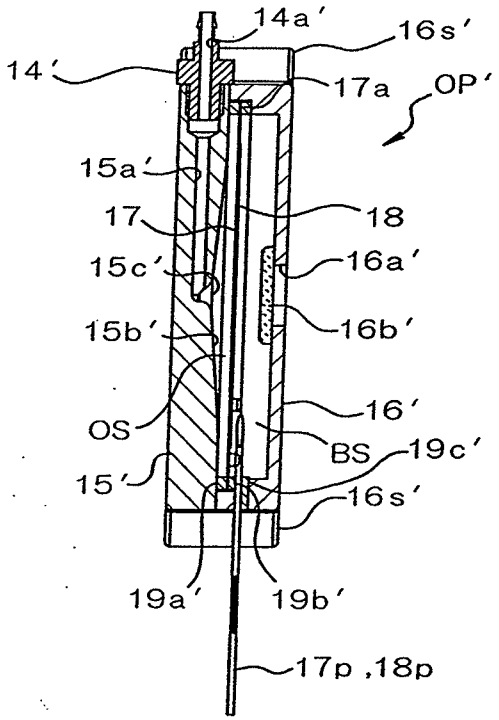
14a′
16s′
14′
17a
OP′
15a′
17
18
15c′
16a′
15b′
16b′
16′
OS
BS
19c′
15′
16s′
19a′
19b′
17p ,18p

Fig. 5

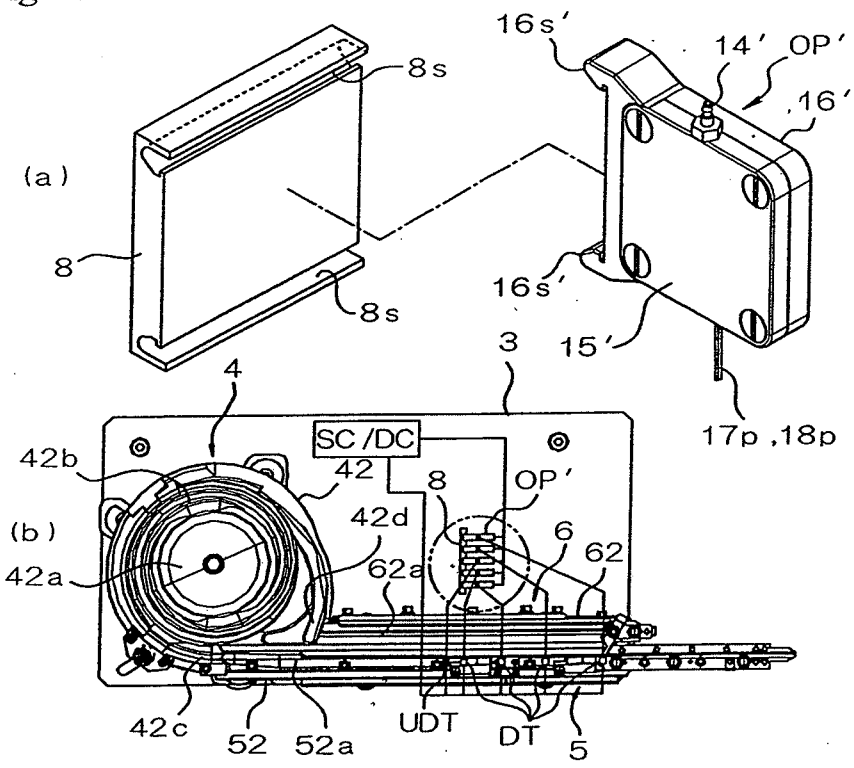
16s'
14'
OP'
16'
8s
(a)
8
8s
16s'
15'
3
4
17p ,18p
SC /DC
42b
42
8
OP'
42d
(b)
6
62
42a
62a
42c
52
52a
UDT
DT
5

Fig. 6

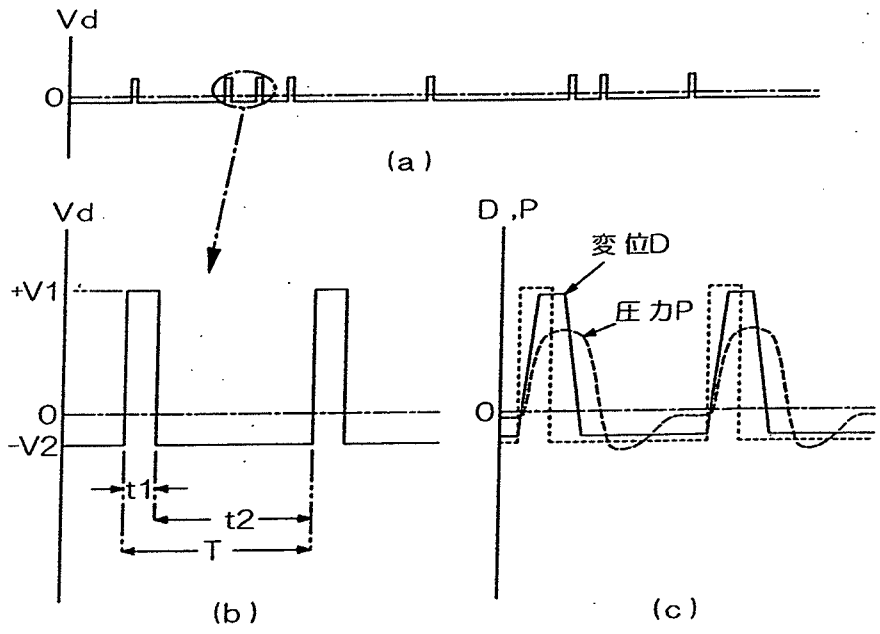
Vd
0
(a)
Vd
D ,P
変位D
+V1
圧力P
0
0
-V2
t1
t2
T
(b)
(c)