Fig. 1

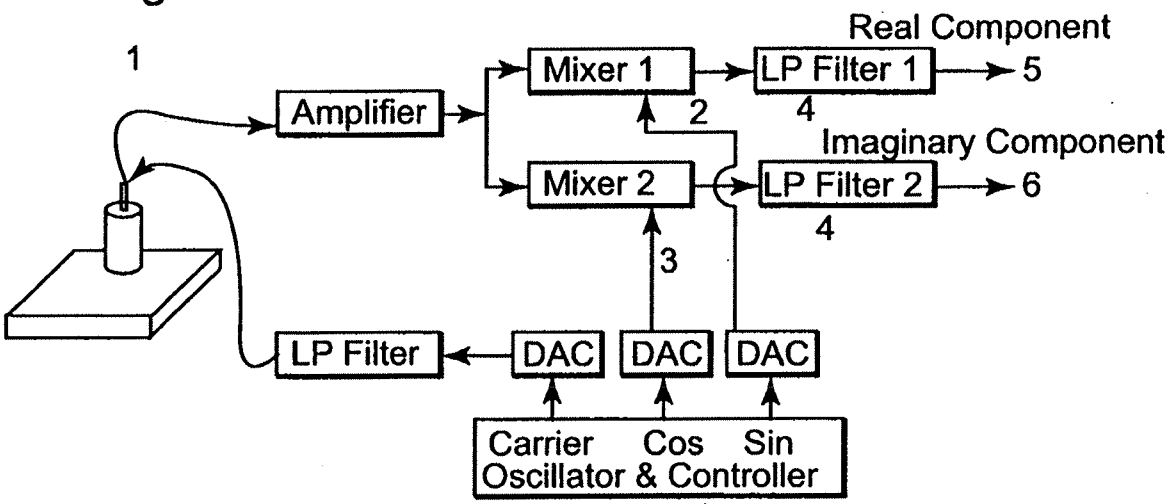
Real Component
1
Mixer 1
LP Filter 1
5
Amplifier
2
4
Imaginary Component
Mixer 2
LP Filter 2
6
4
3
LP Filter
DAC
DAC
DAC
Carrier
Cos
Sin
Oscillator & Controller

Fig. 2

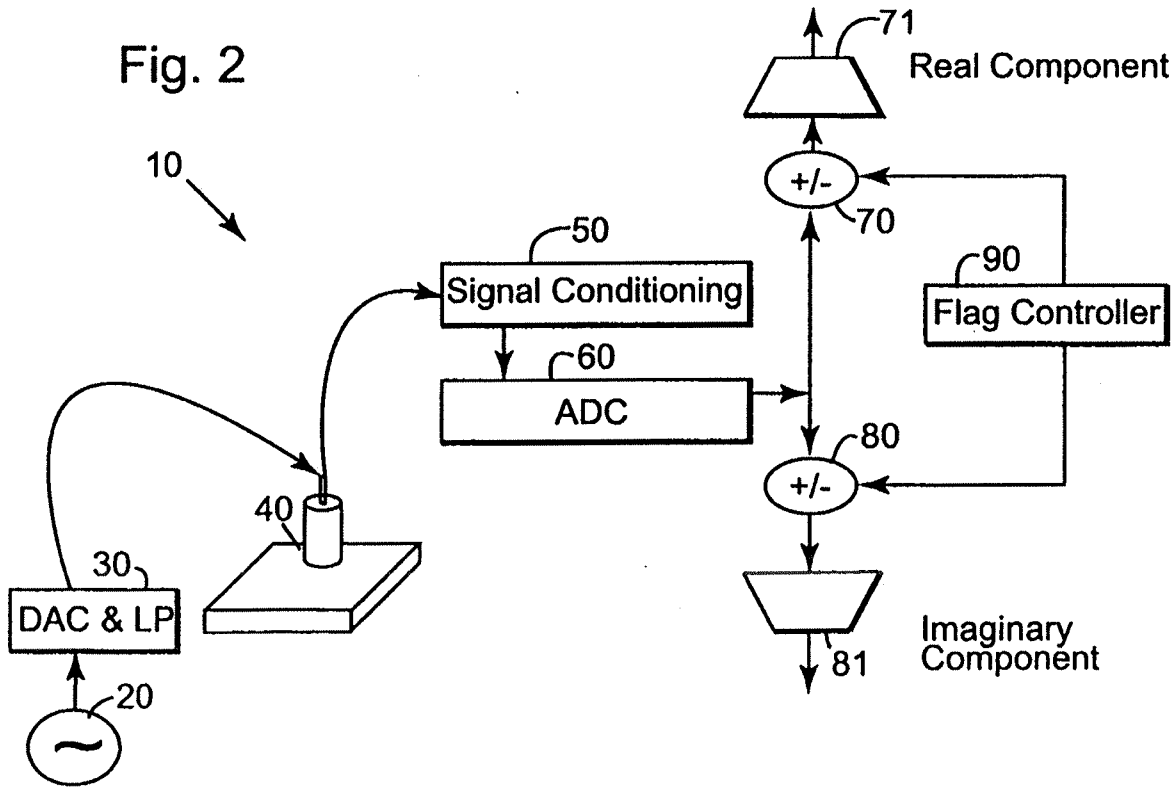
71
Real Component
10
+/-
70
50
90
Signal Conditioning
Flag Controller
60
ADC
80
+/-
40
30
DAC & LP
Imaginary
Component
81
20

Fig.3

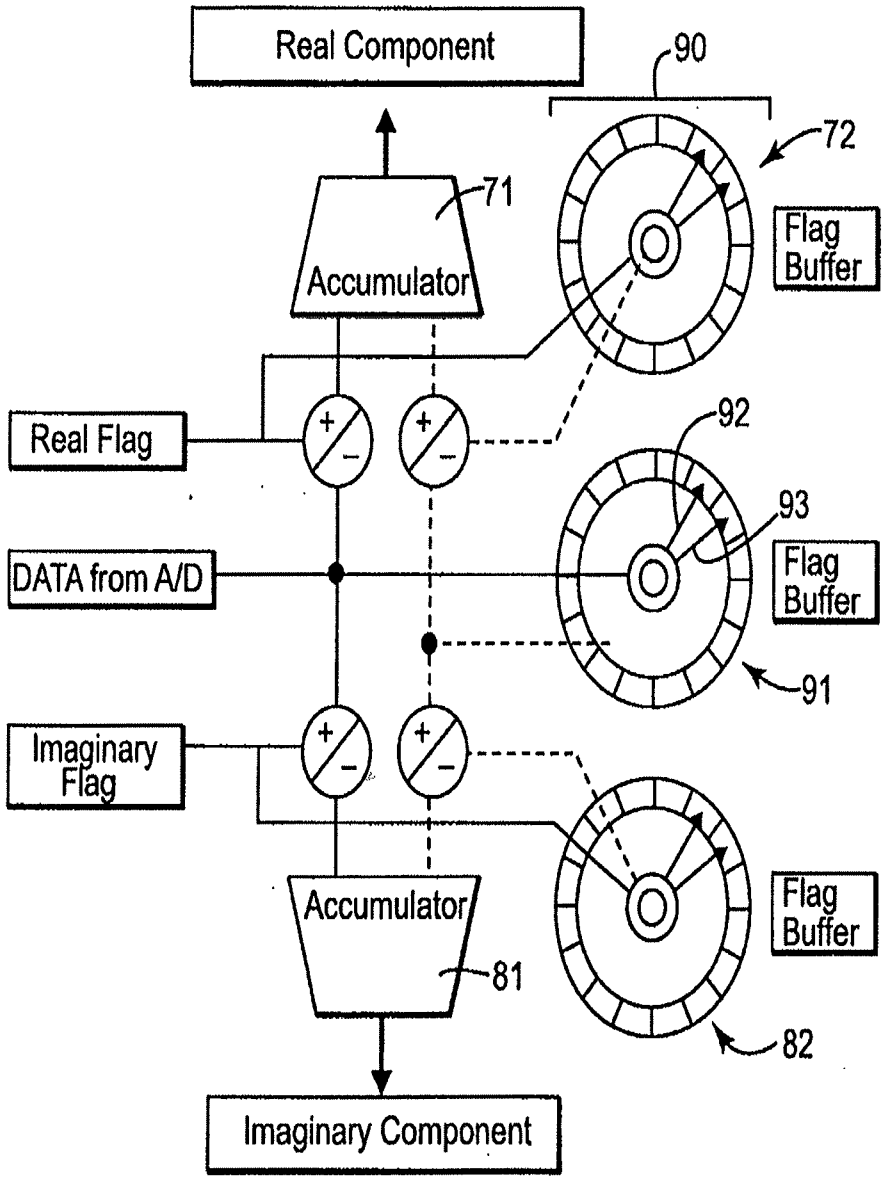
Real Component
90
72
71
Accumulator
Flag Buffer
Real Flag
92
93
DATA from A/D
Flag Buffer
91
Imaginary Flag
Accumulator
Flag Buffer
81
82
Imaginary Component

Fig. 4a

Point	Angle Degrees	Real Flag	Imaginary Flag
1	45	+	+
2	135	+	-
3	225	-	-
4	315	-	+
	Correction Factor	0.707	0.707

Fig. 4b

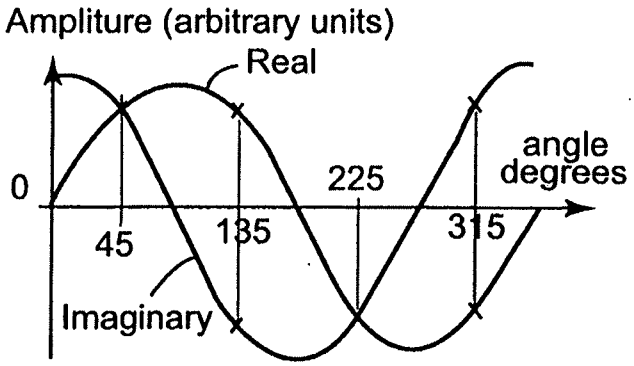

Fig. 5a

Point	Angle Degrees	Real Flag	Imaginary Flag
1	0	0	+
2	90	+	0
3	180	0	-
4	270	-	0
	Correction Factor	0.5	0.5

Fig. 5b

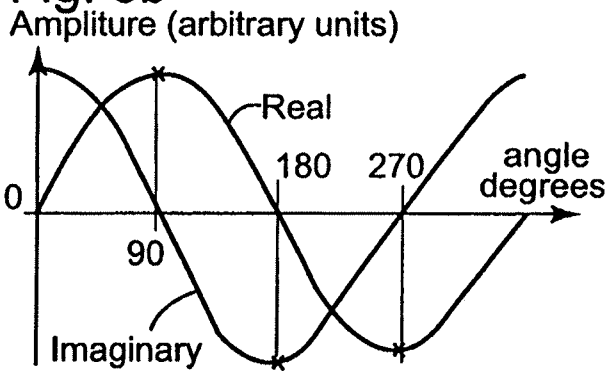

Fig. 6a

Point	Angle Degrees	Real Flag	Imaginary Flag
1	22.5	+	+
2	67.5	+	+
3	112.5	+	-
4	157.5	+	-
5	202.5	-	-
6	247.5	-	-
7	292.5	-	+
8	337.5	-	+
	Correction Factor	0.653	0.653

Fig. 6b

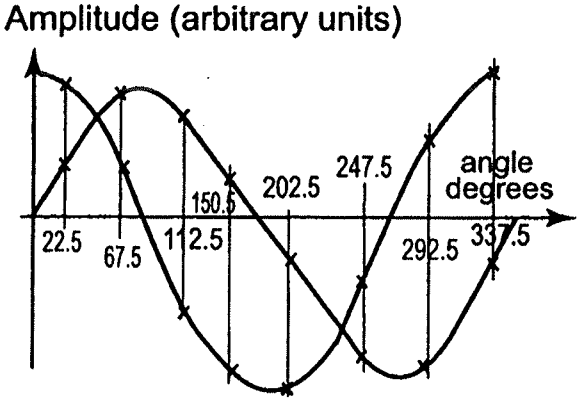

Fig. 7

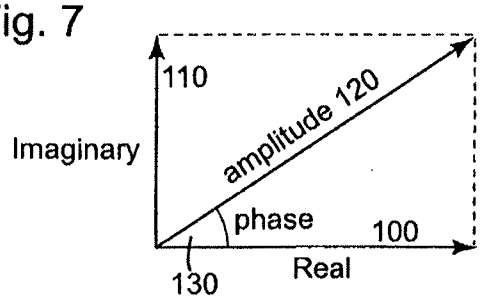

Figure 8a

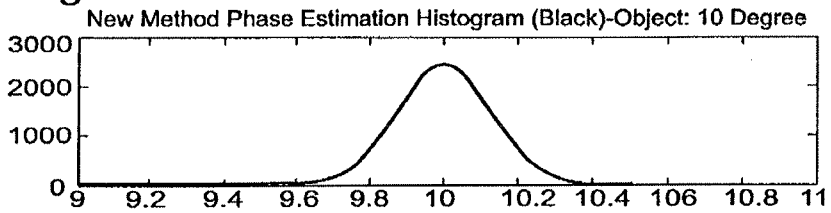

Figure 8b

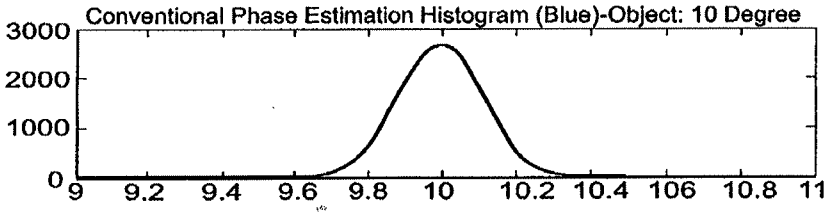

Figure 9a

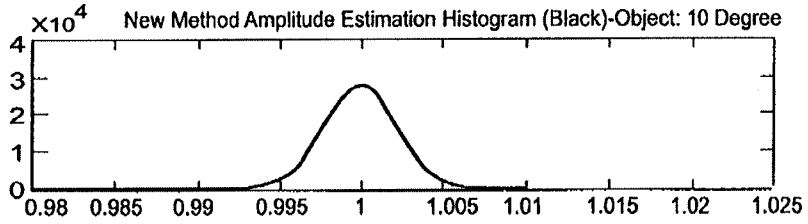

Figure 9b

