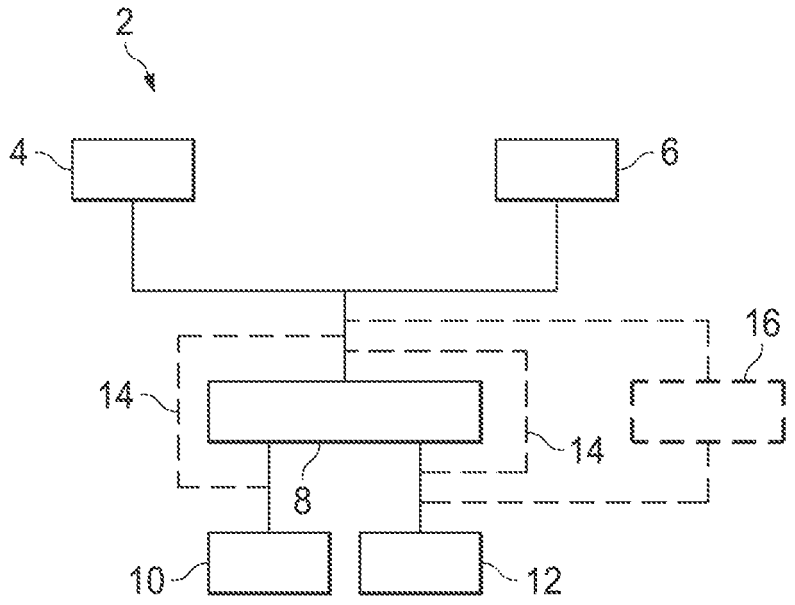

FIG. 1A

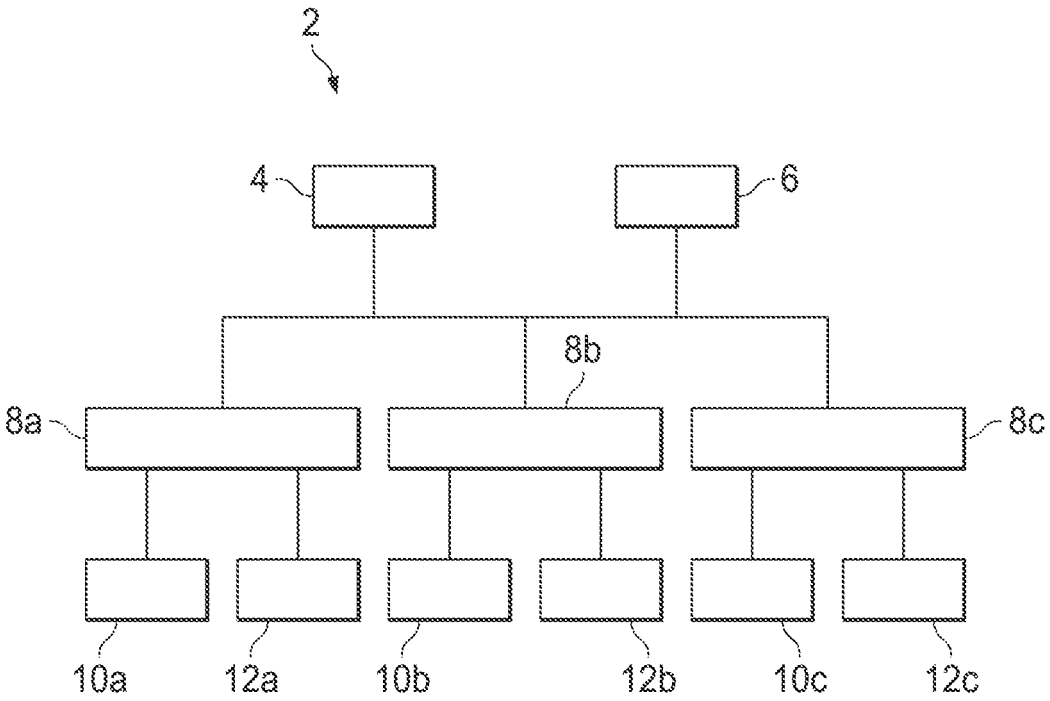

FIG. 1B

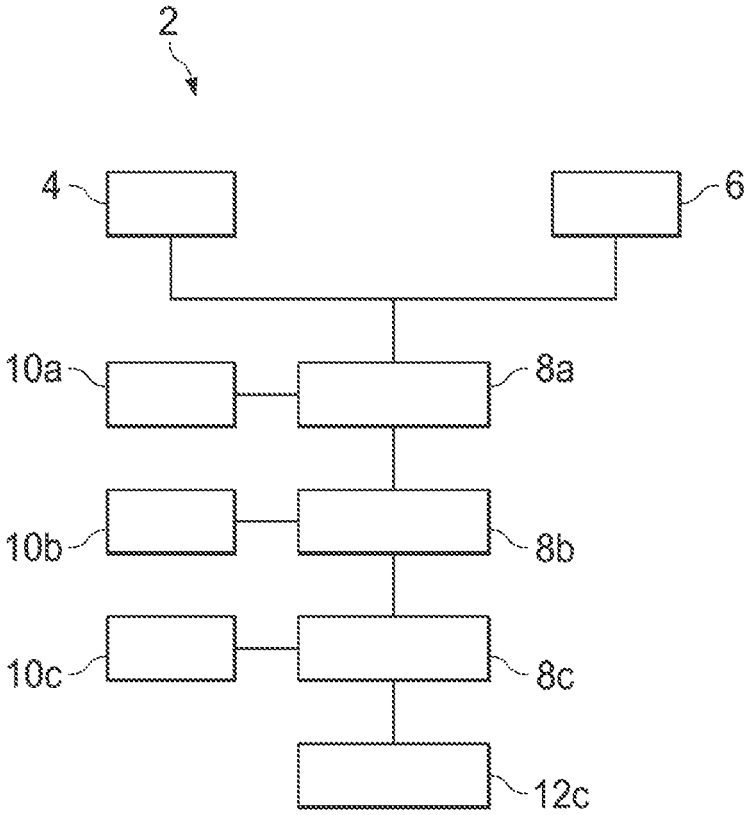

FIG. 1C

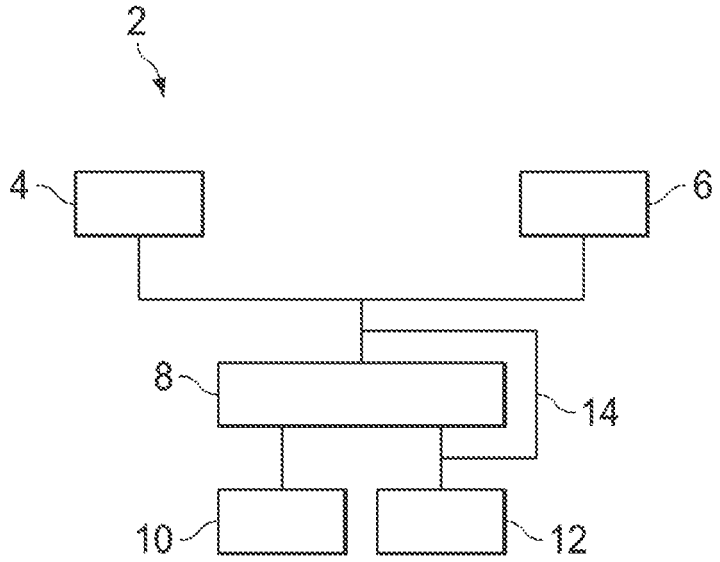

FIG. 1D

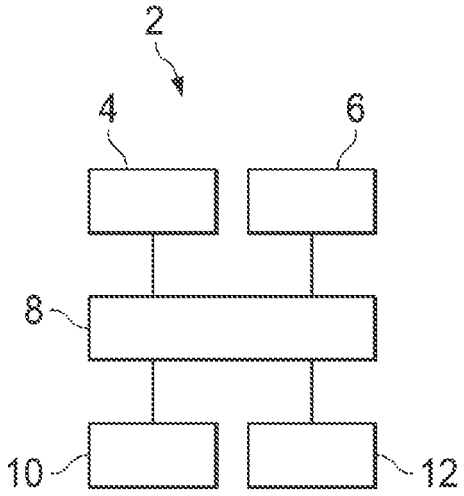

FIG. 1E

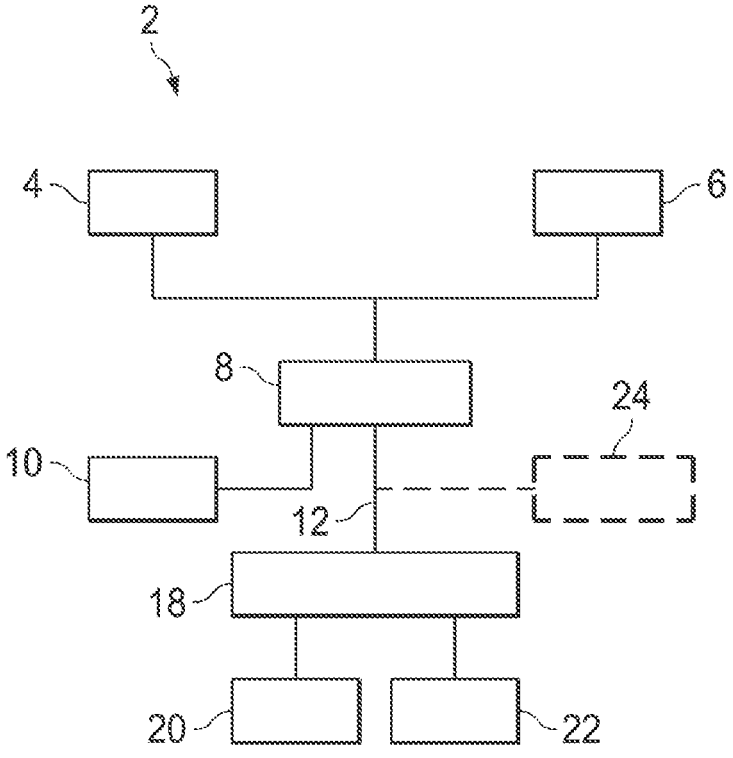

FIG. 1F

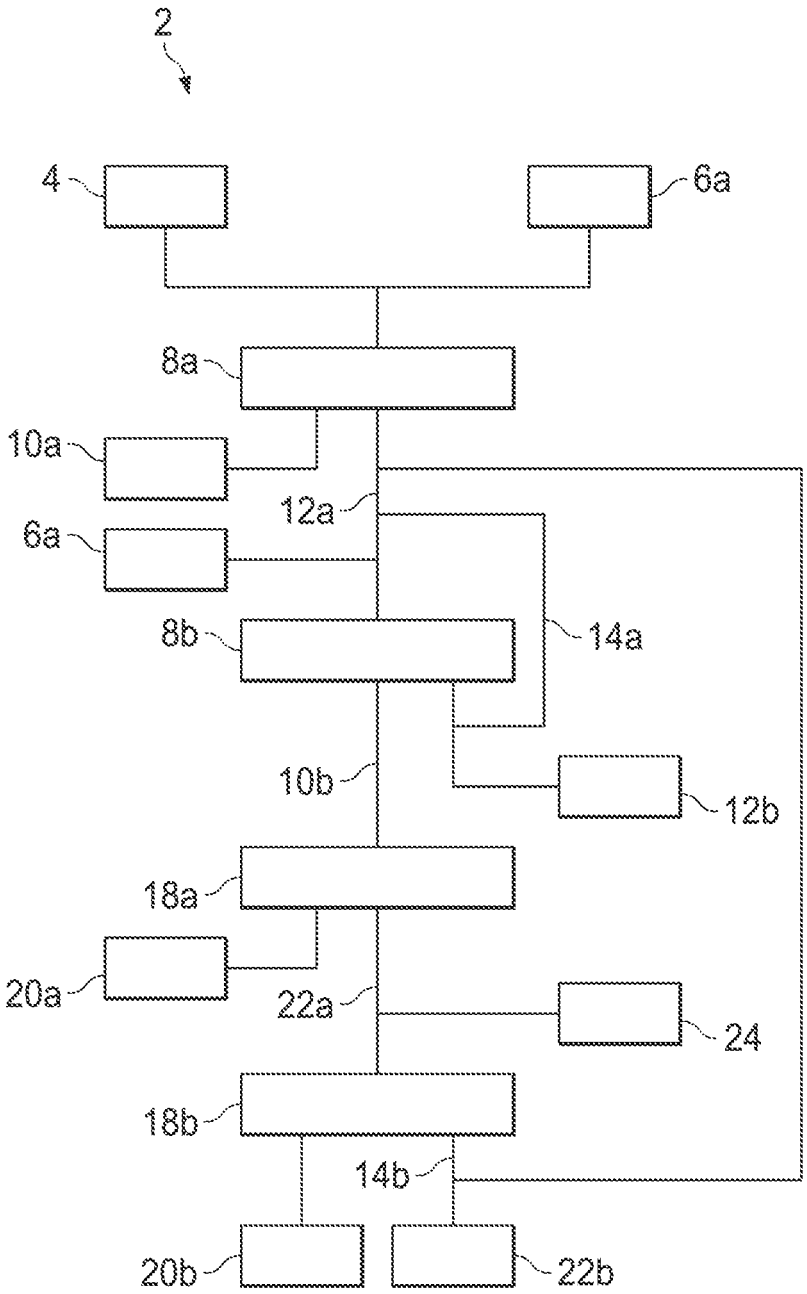

FIG. 1G

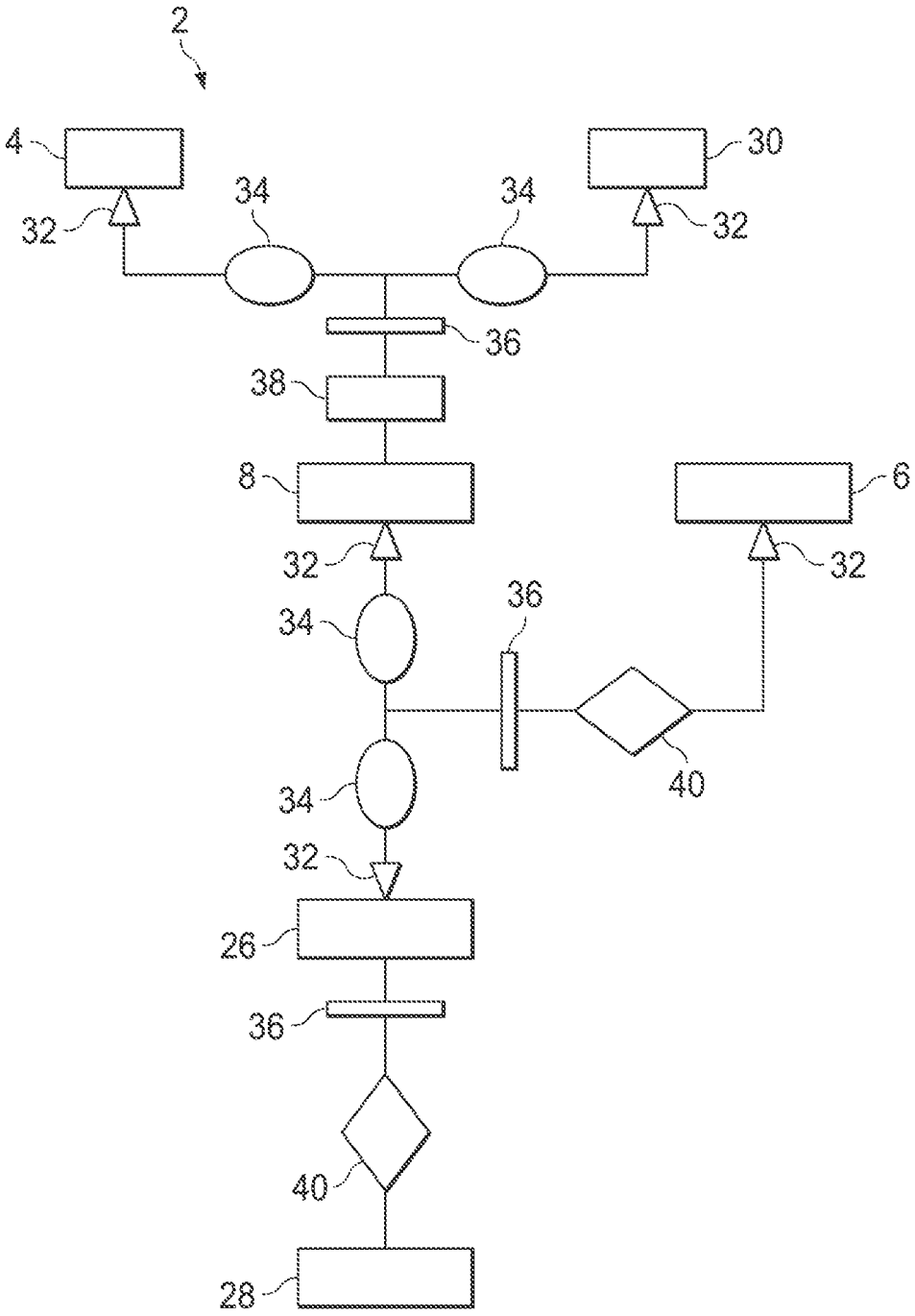

FIG. 1H

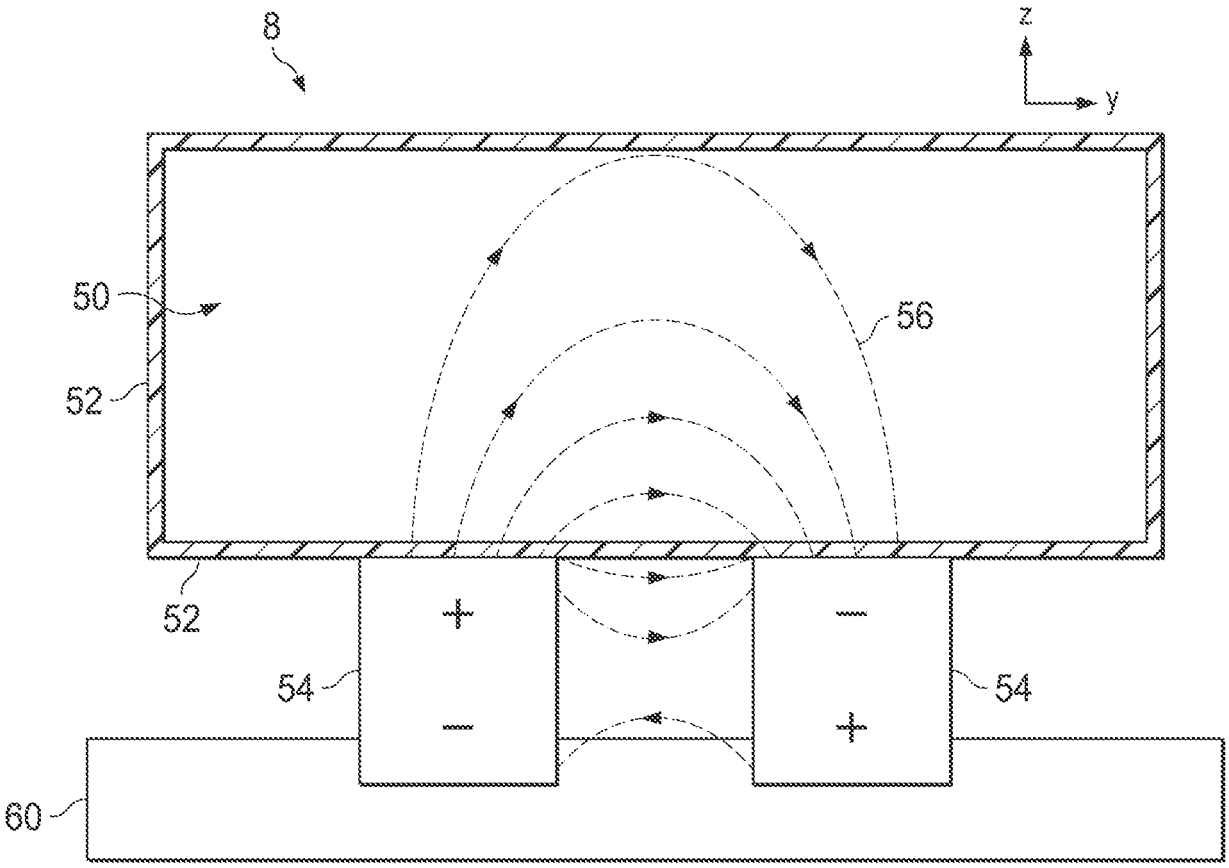

FIG. 2A

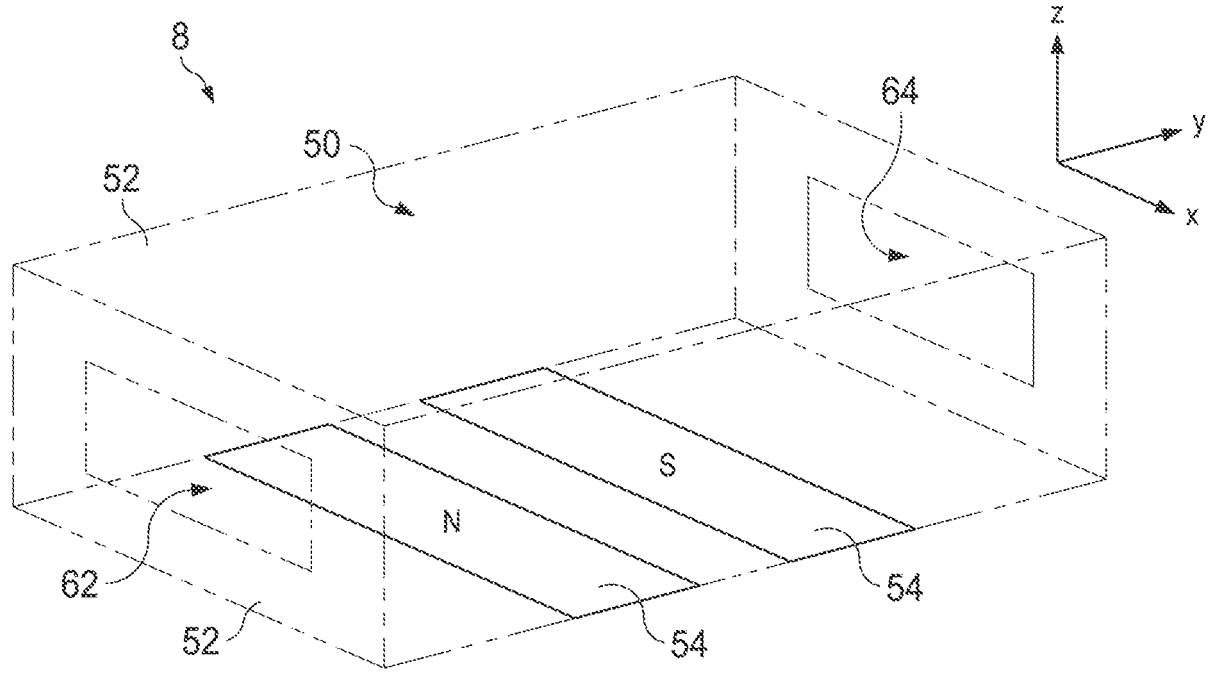

FIG. 2B

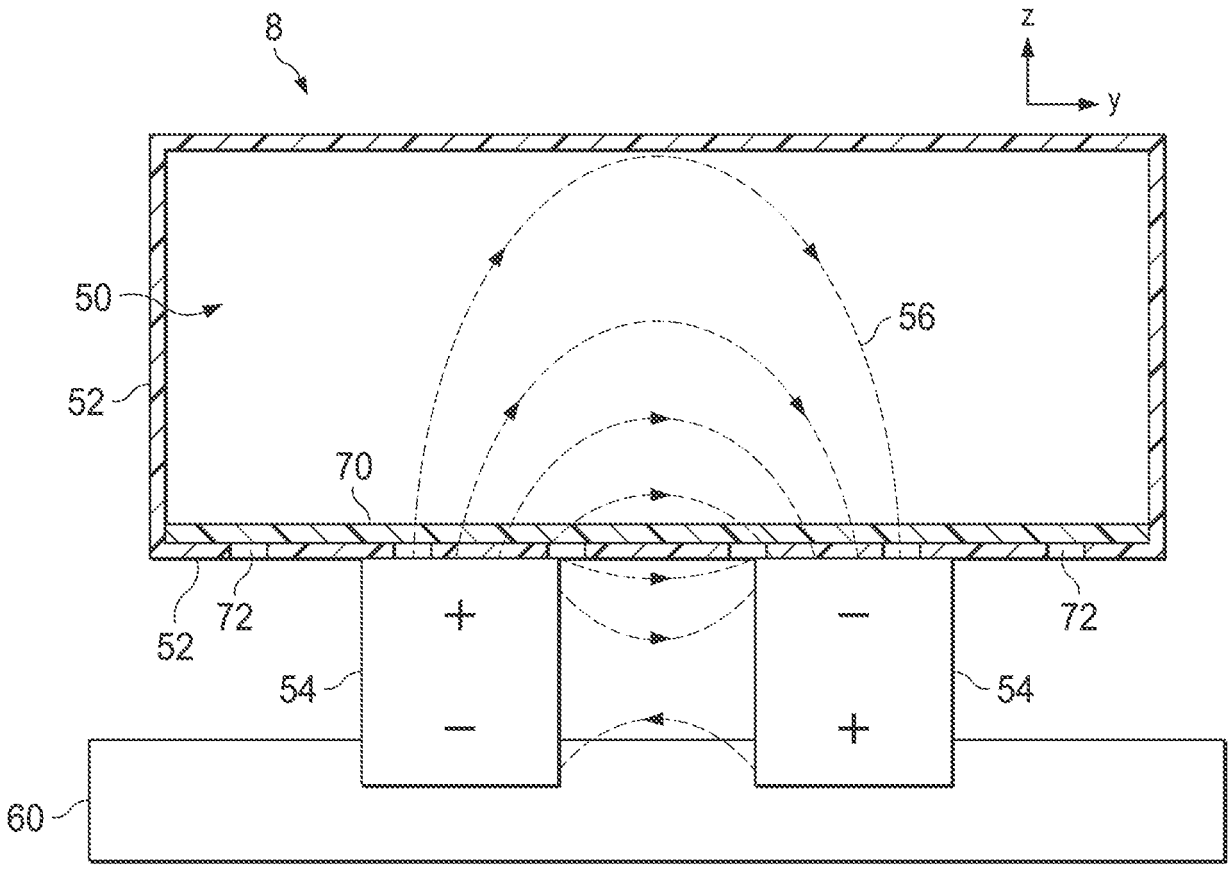

FIG. 3

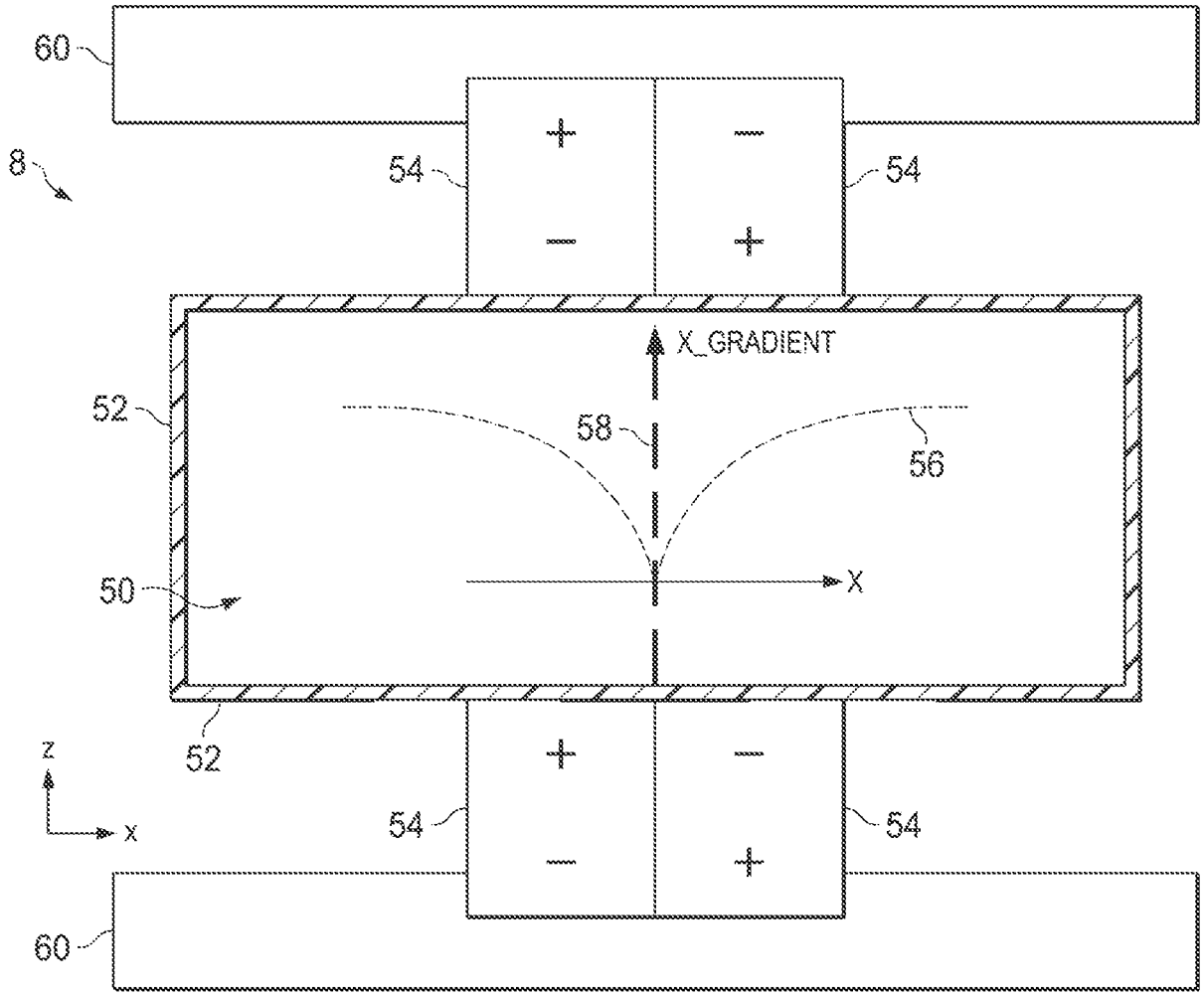
60
8
54
54
+
−
−
+
X_GRADIENT
52
58
56
50
X
52
z
x
54
54
+
−
−
+
60

FIG. 4A

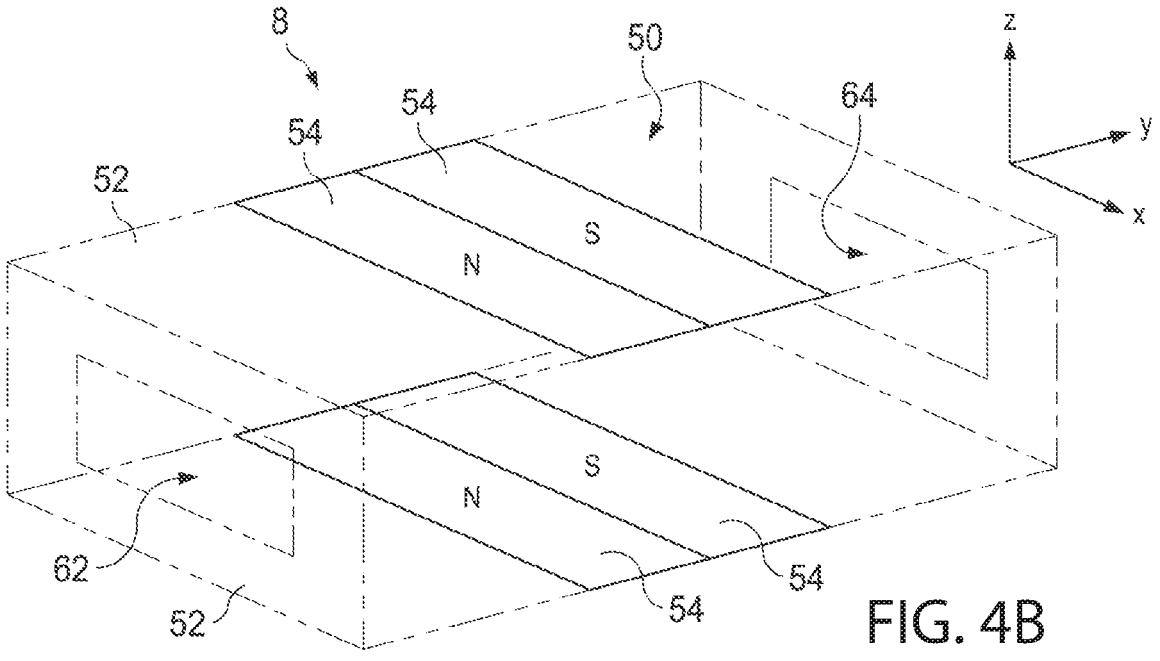
8
50
z
54
54
64
y
52
x
S
N
S
N
62
52
54
54

FIG. 4B

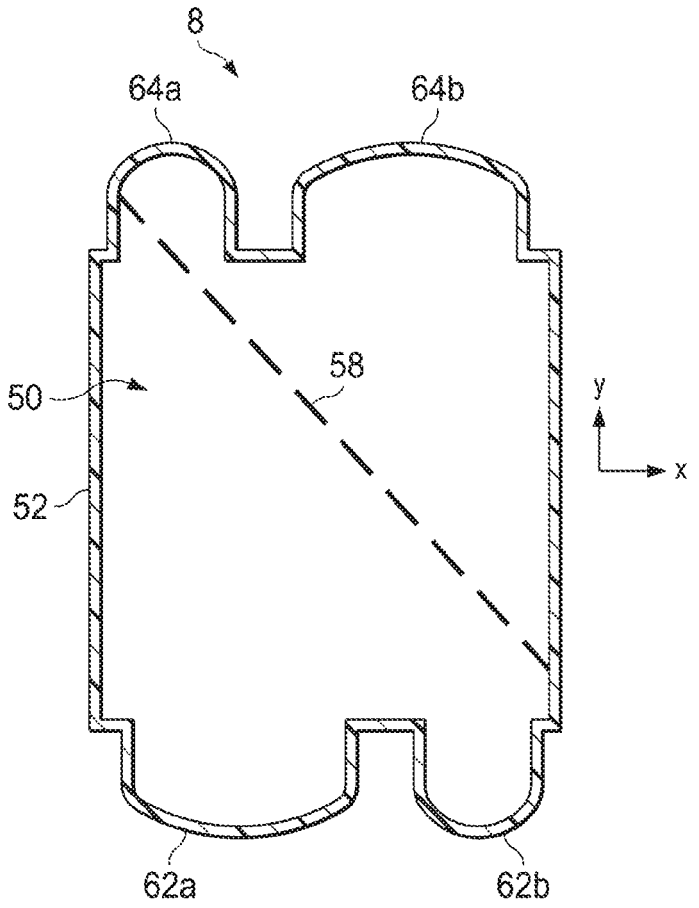

FIG. 4C

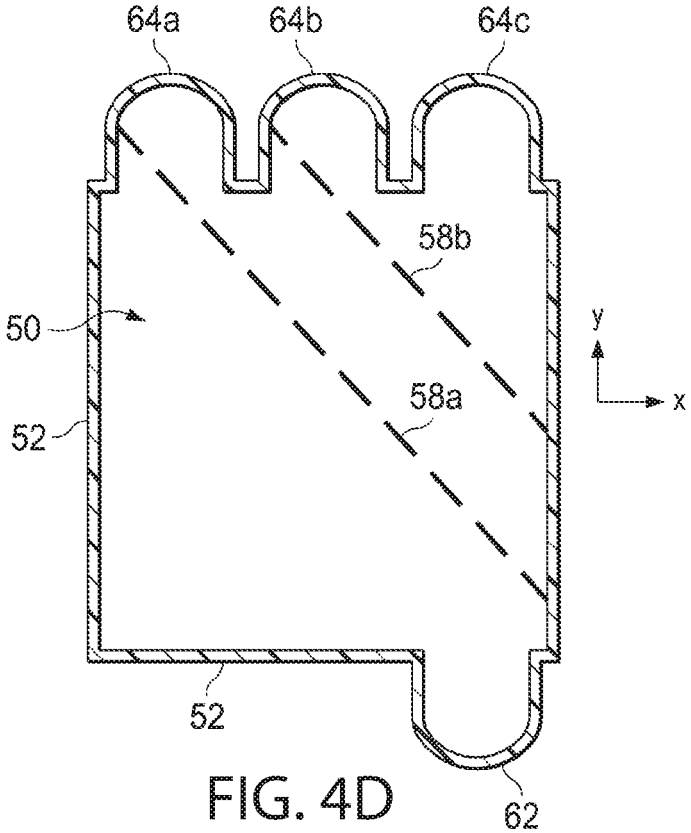

FIG. 4D

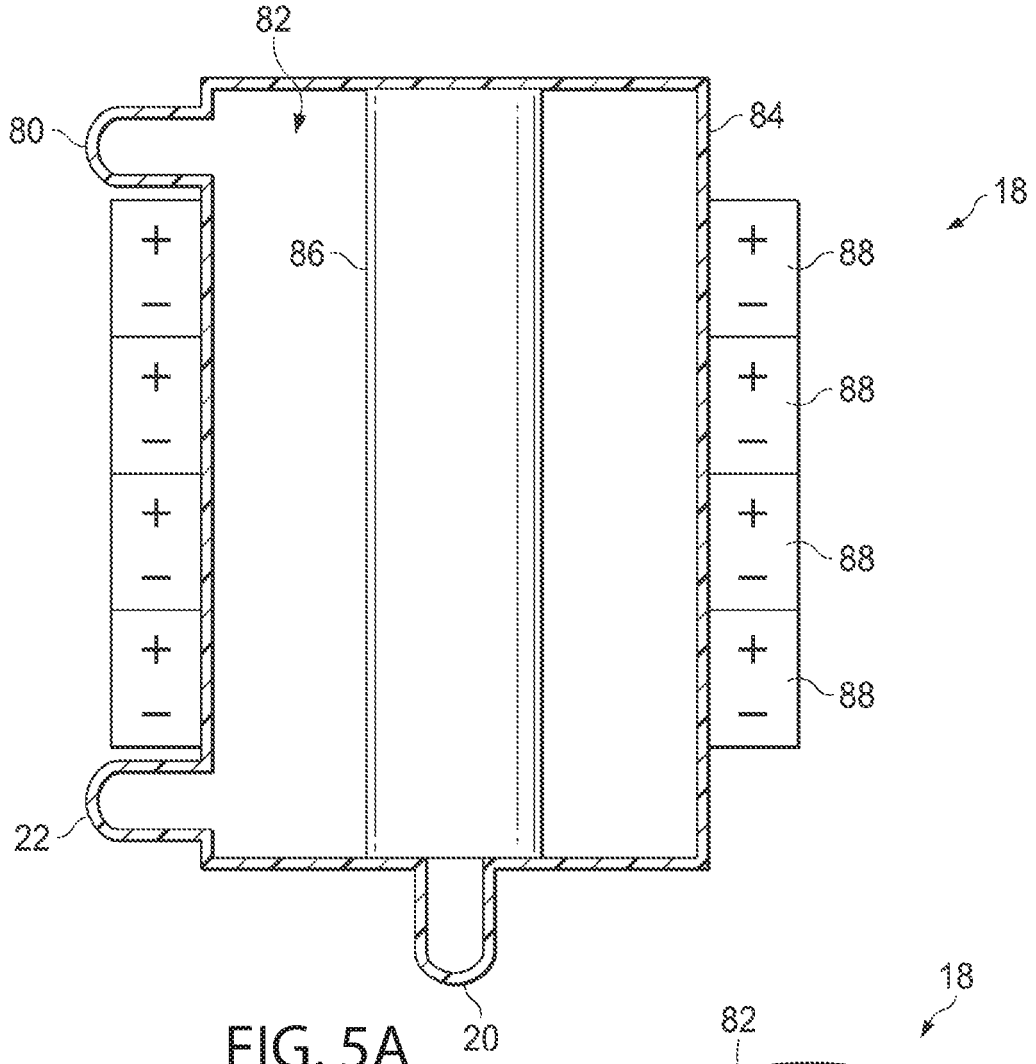

FIG. 5A

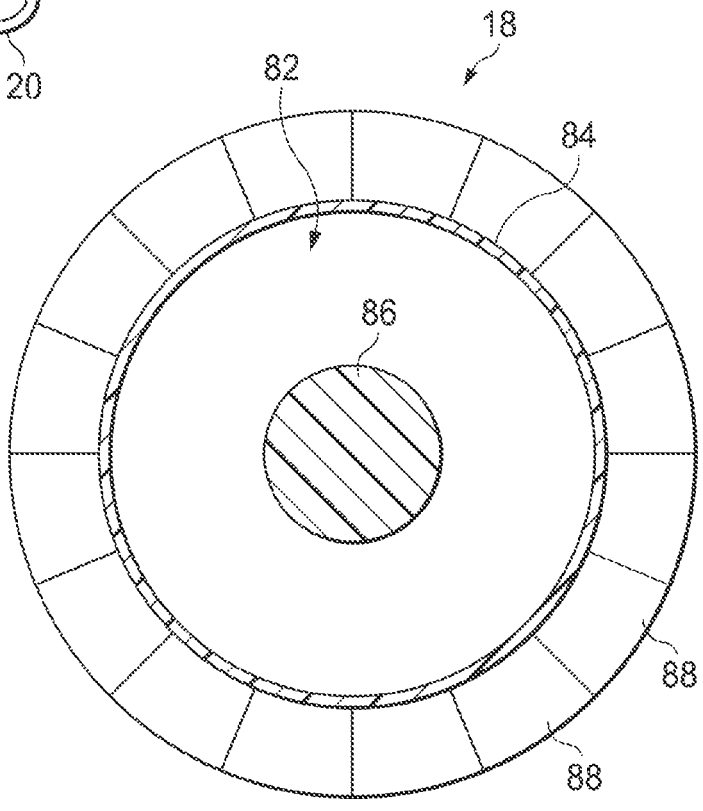

FIG. 5B

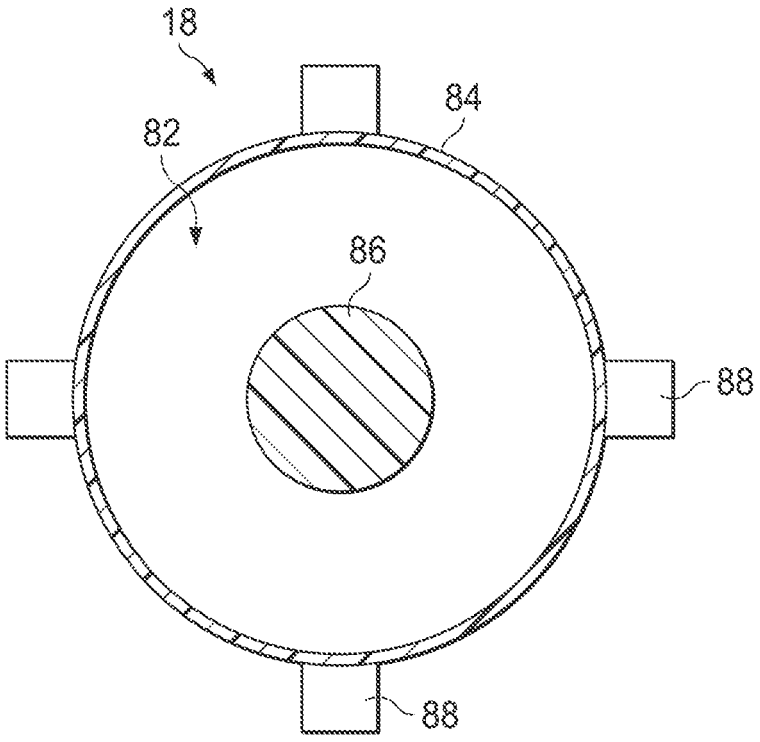

FIG. 5C

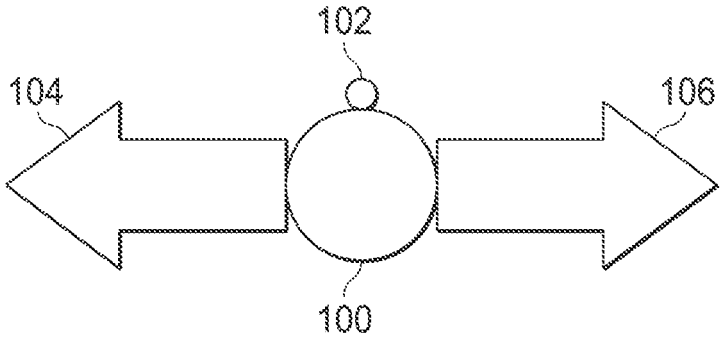

FIG. 6

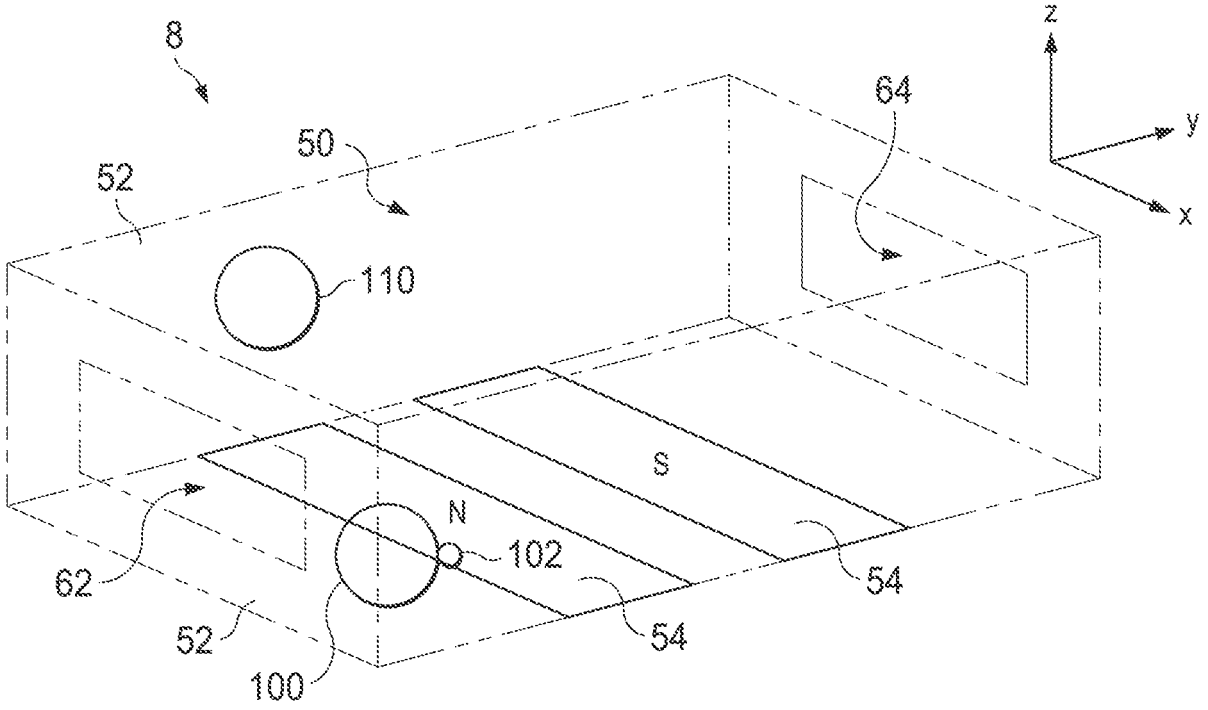
8
50
52
110
64
z
y
x
S
N
102
62
52
100
54
54

FIG. 7A

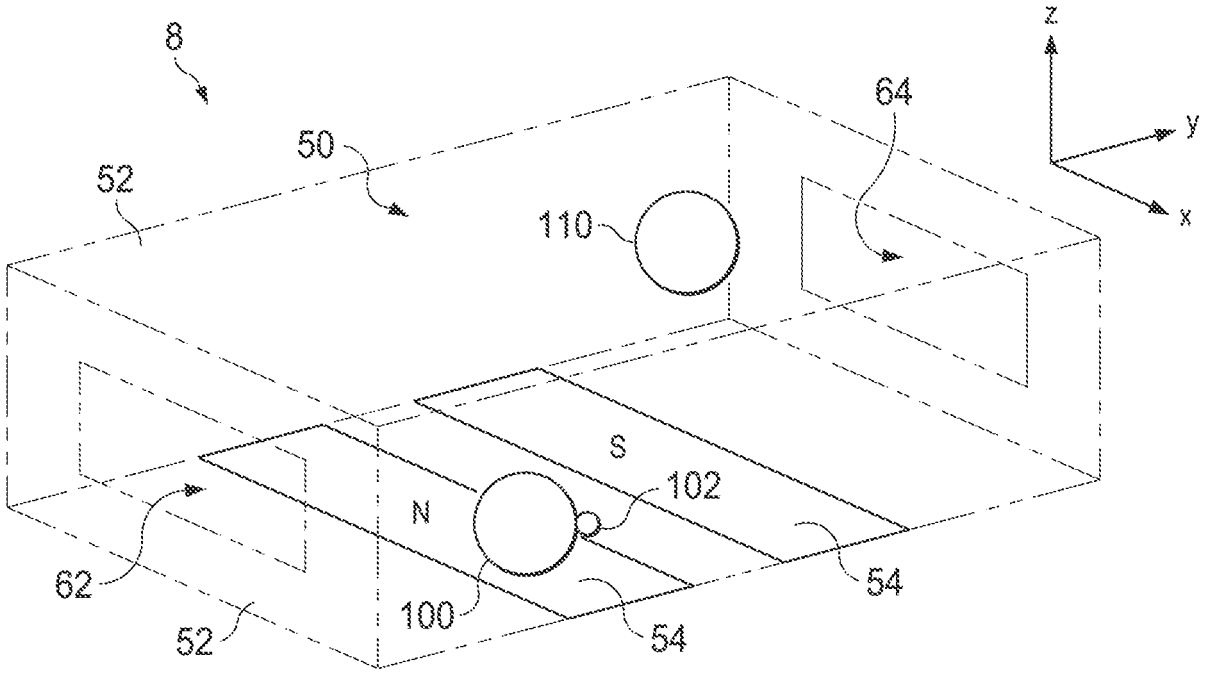
8
50
52
110
64
z
y
x
S
N
102
62
52
100
54
54

FIG. 7B

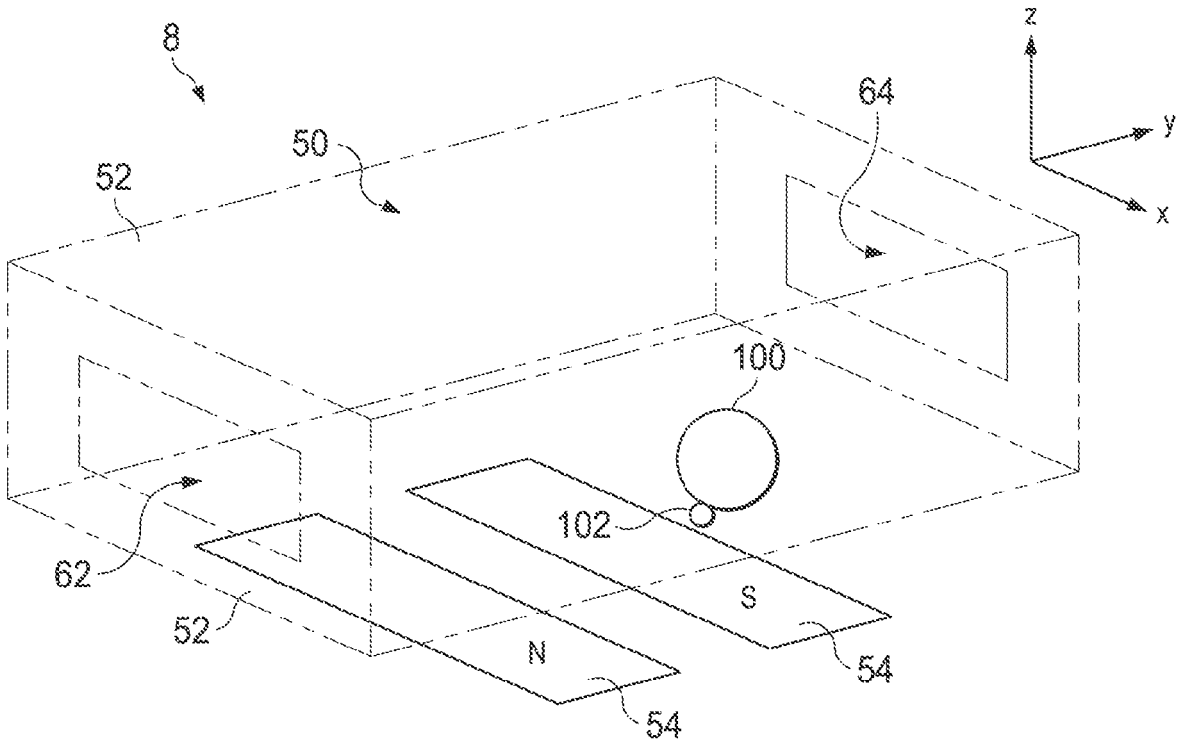
8
50
52
64
z
y
x
100
102
62
52
S
N
54
54

FIG. 7C

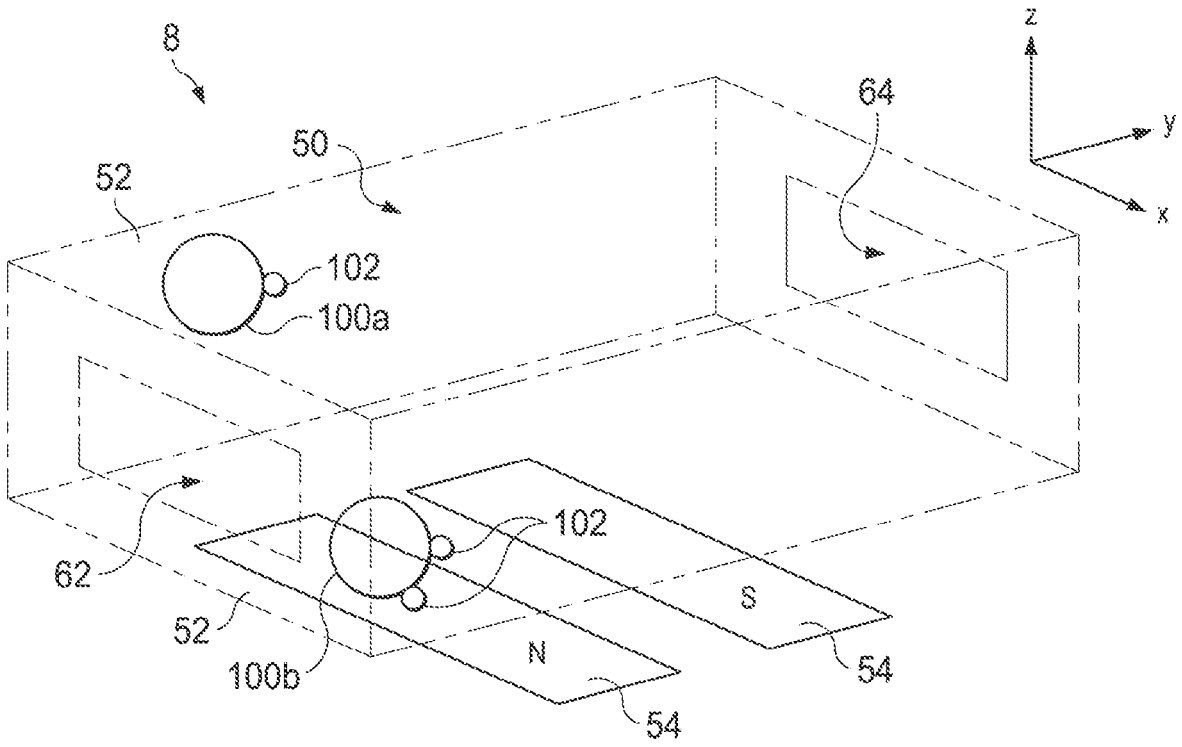
8
50
52
64
z
y
x
102
100a
62
52
100b
102
S
N
54
54

FIG. 8A

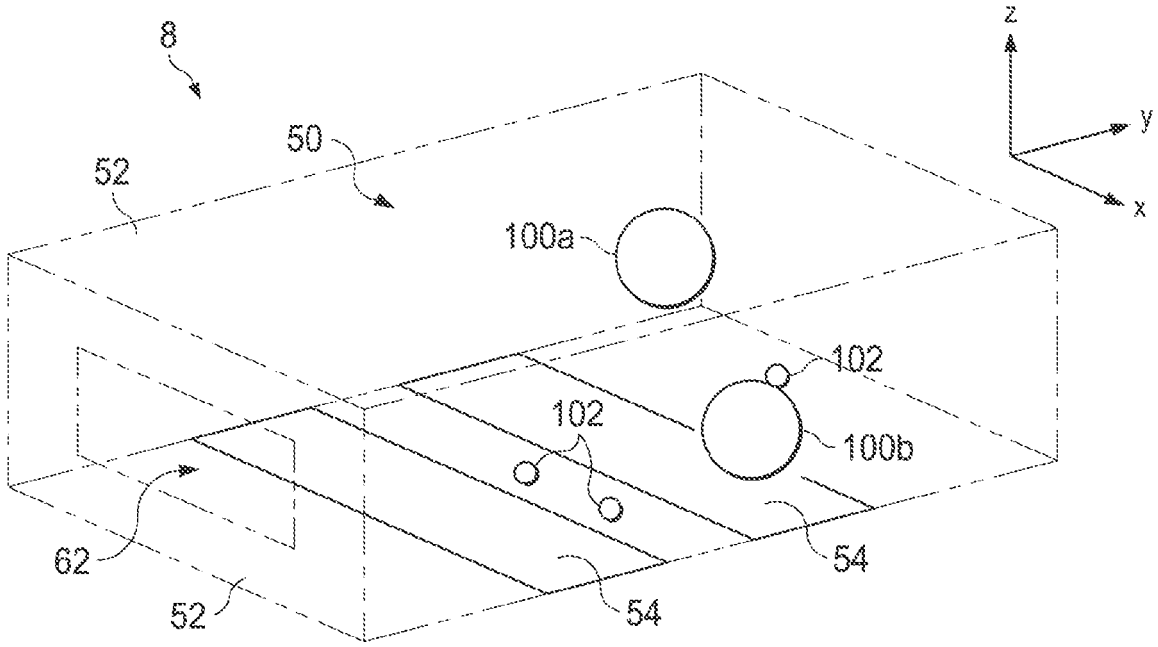
8
50
52
100a
102
102
100b
62
52
54
54
z
y
x

FIG. 8B

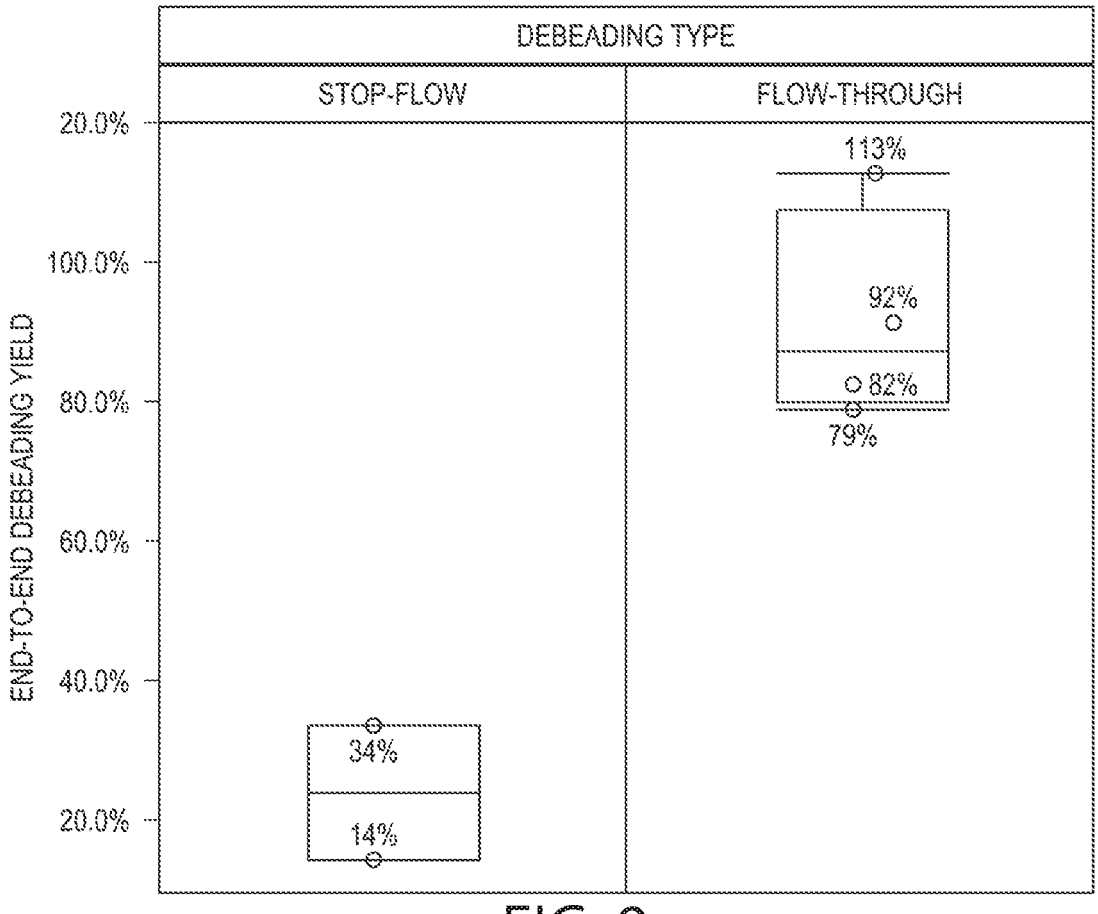
DEBEADING TYPE
STOP-FLOW
FLOW-THROUGH
END-TO-END DEBEADING YIELD
20.0%
100.0%
80.0%
60.0%
40.0%
20.0%
113%
92%
82%
79%
34%
14%

FIG. 9

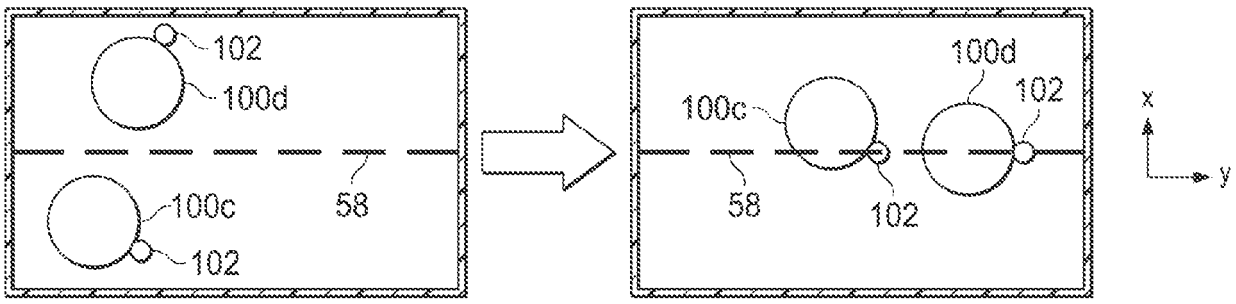

FIG. 10A

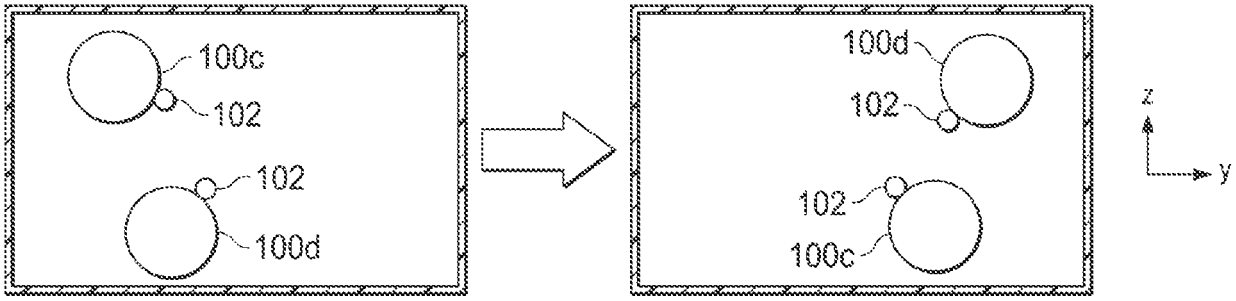

FIG. 10B

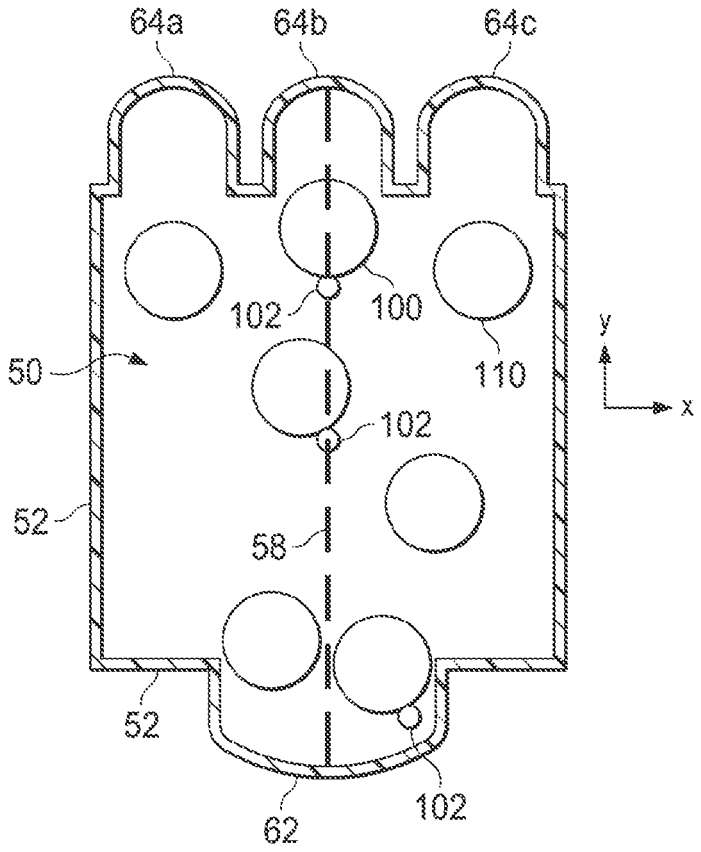
64a
64b
64c
102
100
110
50
102
52
58
52
62
102
y
x

FIG. 11

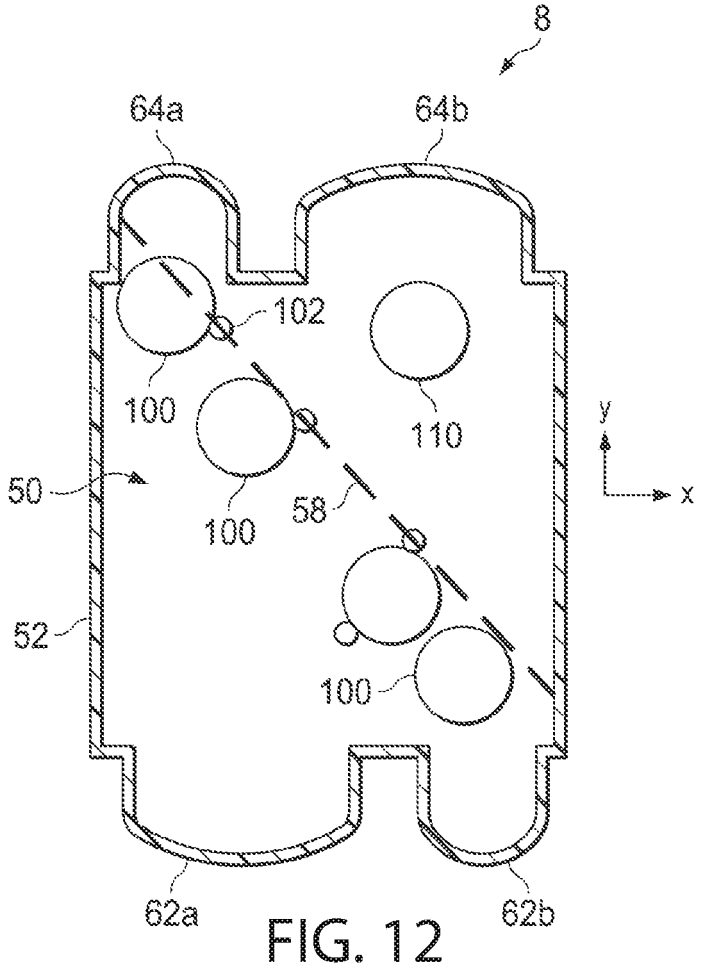
8
64a
64b
102
100
110
50
100
58
52
100
62a
62b
y
x

FIG. 12

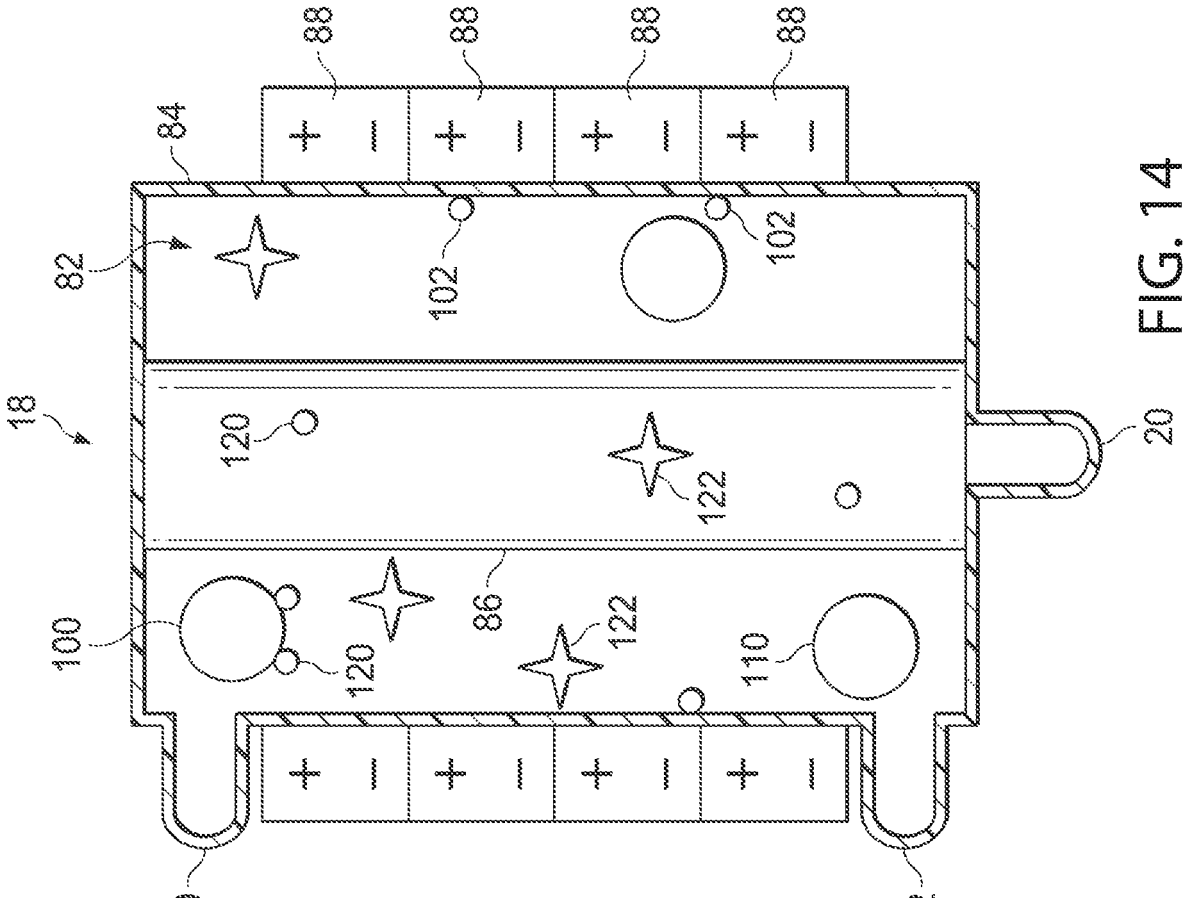
88
88
88
88
84
82
102
102
18
120
122
20
86
100
120
122
110

FIG. 14

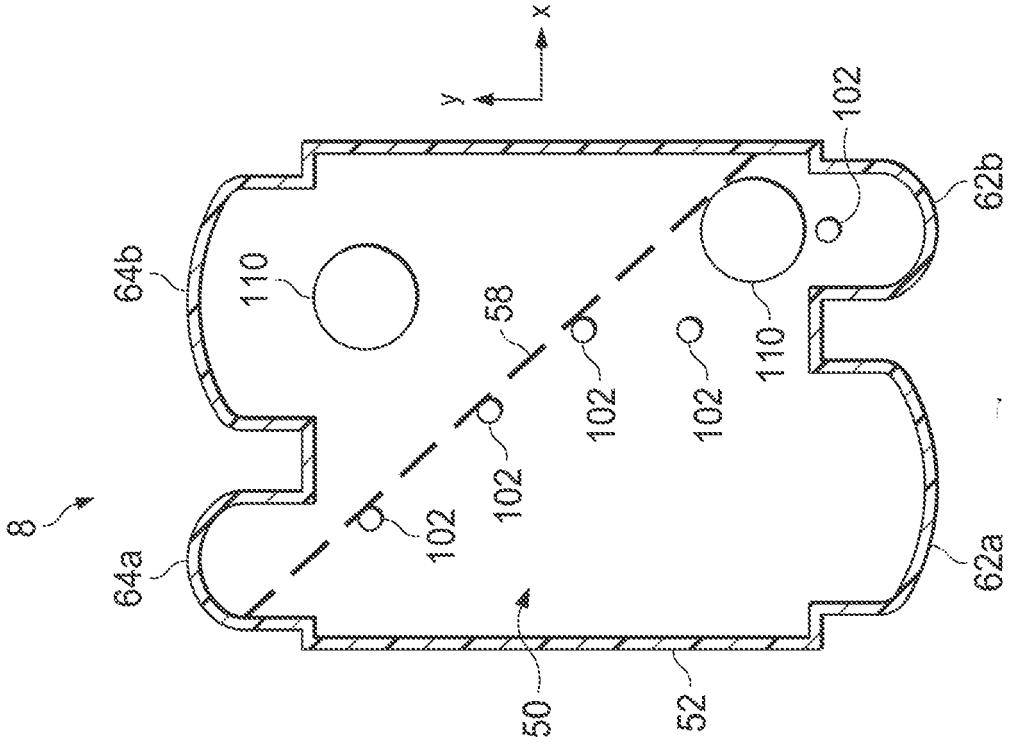
x
y
102
62b
64b
110
58
102
102
110
102
102
8
64a
62a
50
52

FIG. 13

- Post-Smart Wash cells re-suspended in MM
- Clumping observed after 2 hr. incubation

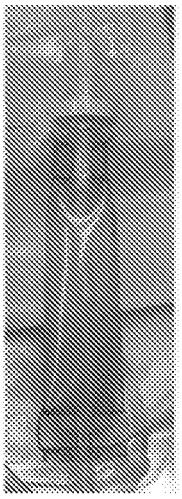

FIG. 15A

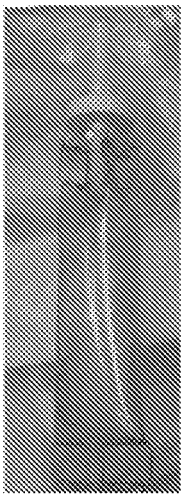

- Post-Smart Wash cells re-suspended in D5
- No clumping observed after 2 hr. incubation

FIG. 15B

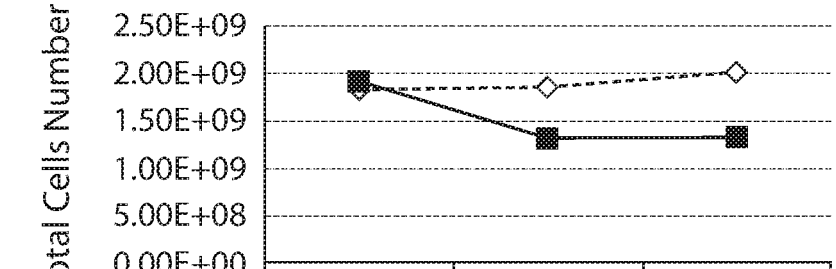

	Pre-Wash	Post-Wash	Post 2 hour incubation
SEPAX Smart Wash	1.85E+09	1.85E+09	2.00E+09
CS5 Wash	1.91E+09	1.31E+09	1.32E+09

FIG. 16A

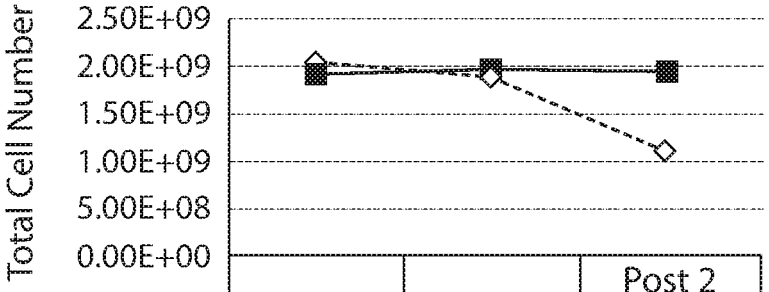

	Pre-Wash	Post-Wash	Post 2 hour incubation
Modified Medium	2.04E+09	1.88E+09	1.10E+09
5% D + 0.45% NACl	1.92E+09	1.96E+09	1.94E+09

FIG. 16B

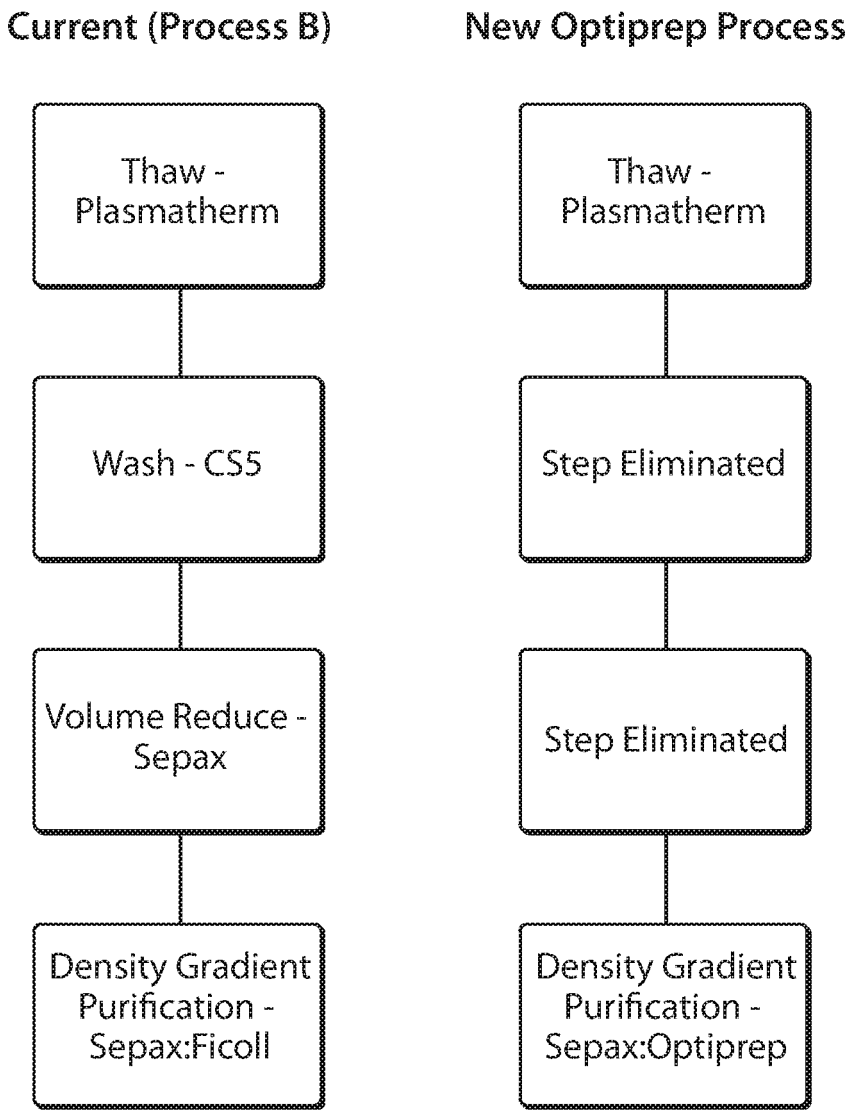
Current (Process B)
Thaw - Plasmatherm
Wash - CS5
Volume Reduce - Sepax
Density Gradient Purification - Sepax:Ficoll
New Optiprep Process
Thaw - Plasmatherm
Step Eliminated
Step Eliminated
Density Gradient Purification - Sepax:Optiprep

FIG. 17

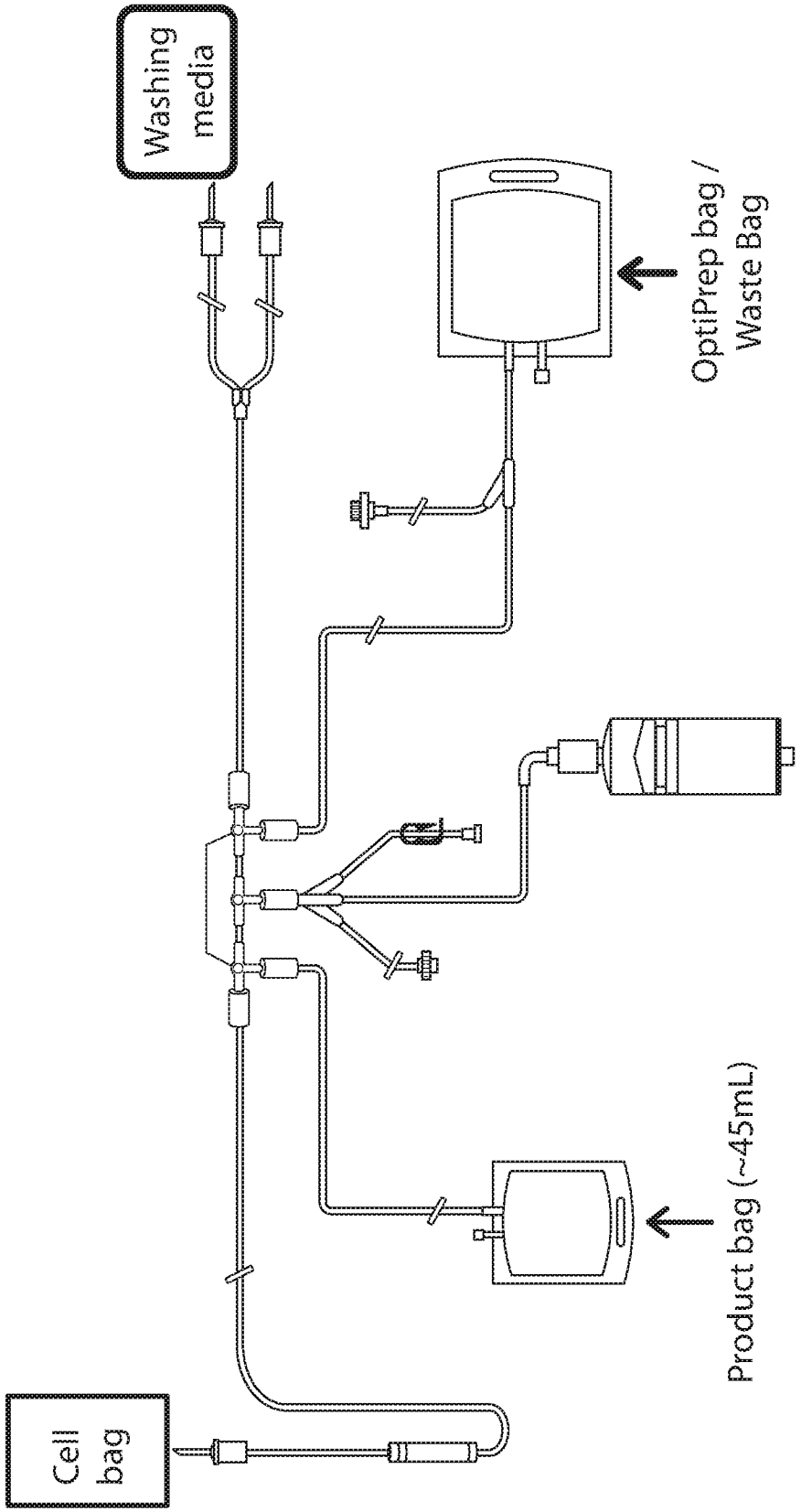
Washing media
OptiPrep bag / Waste Bag
Product bag (~45mL)
Cell bag

FIG. 18

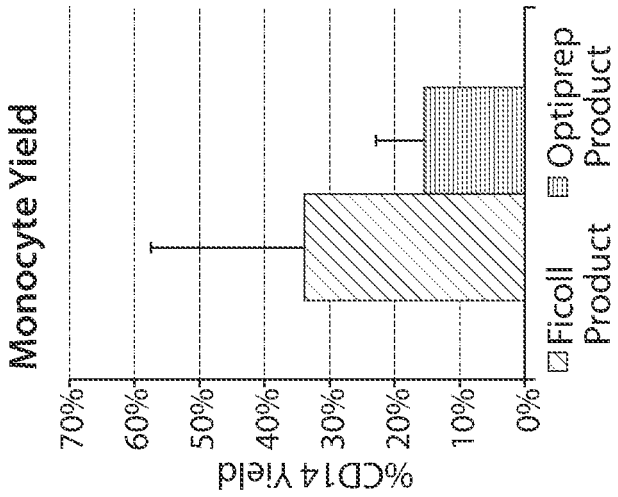

FIG. 19C

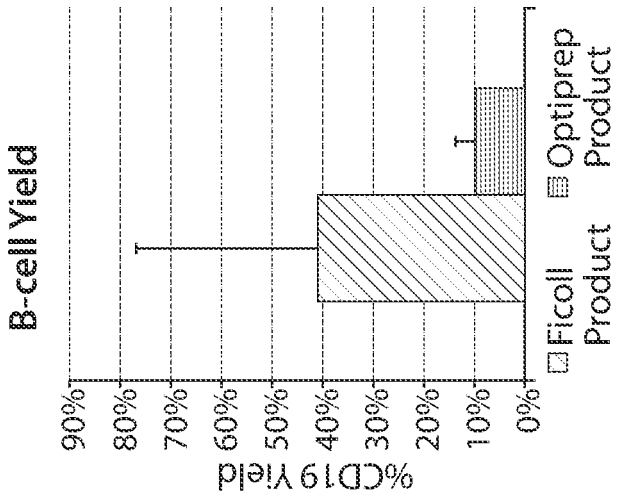

FIG. 19B

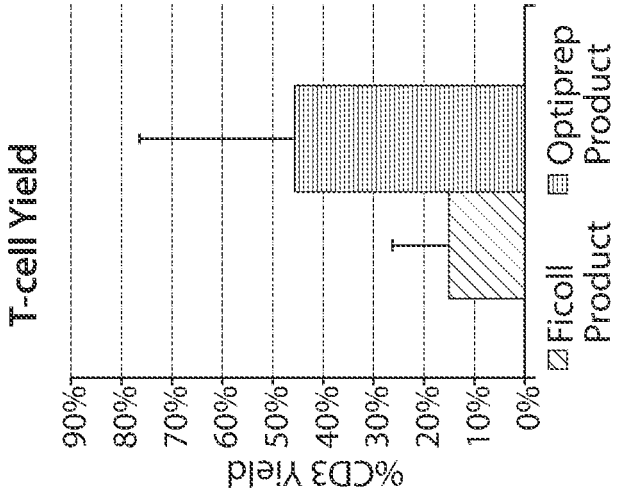

FIG. 19A

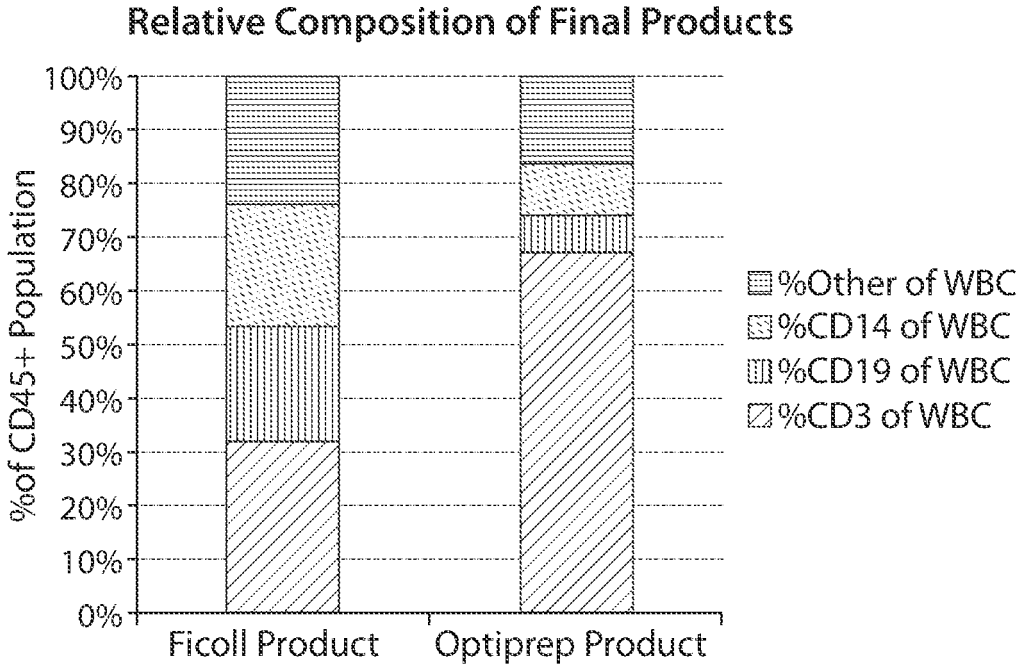

FIG. 19D

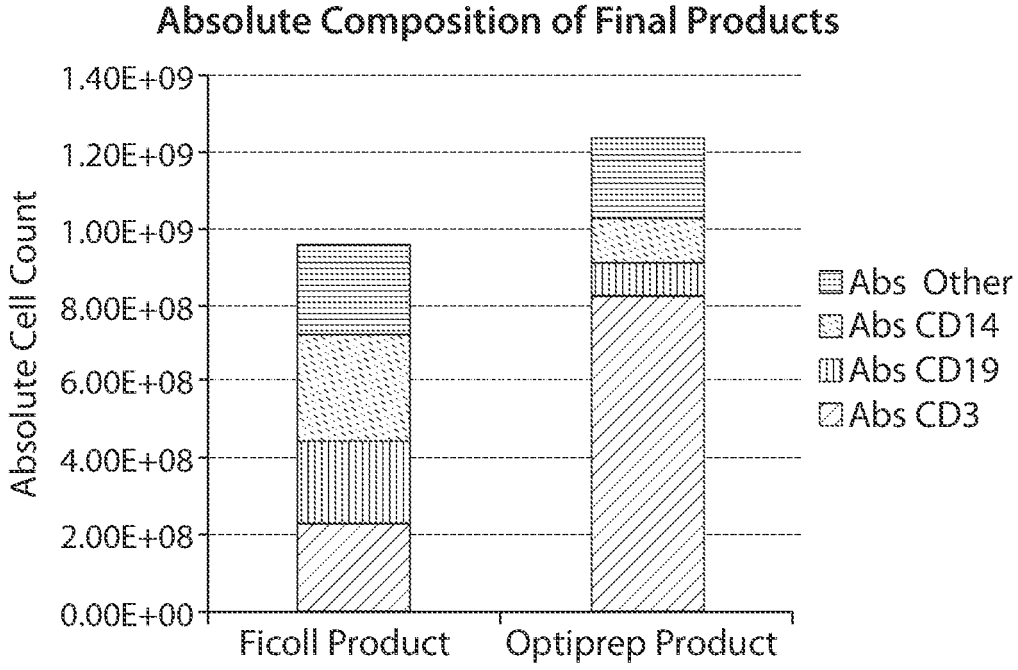

FIG. 19E

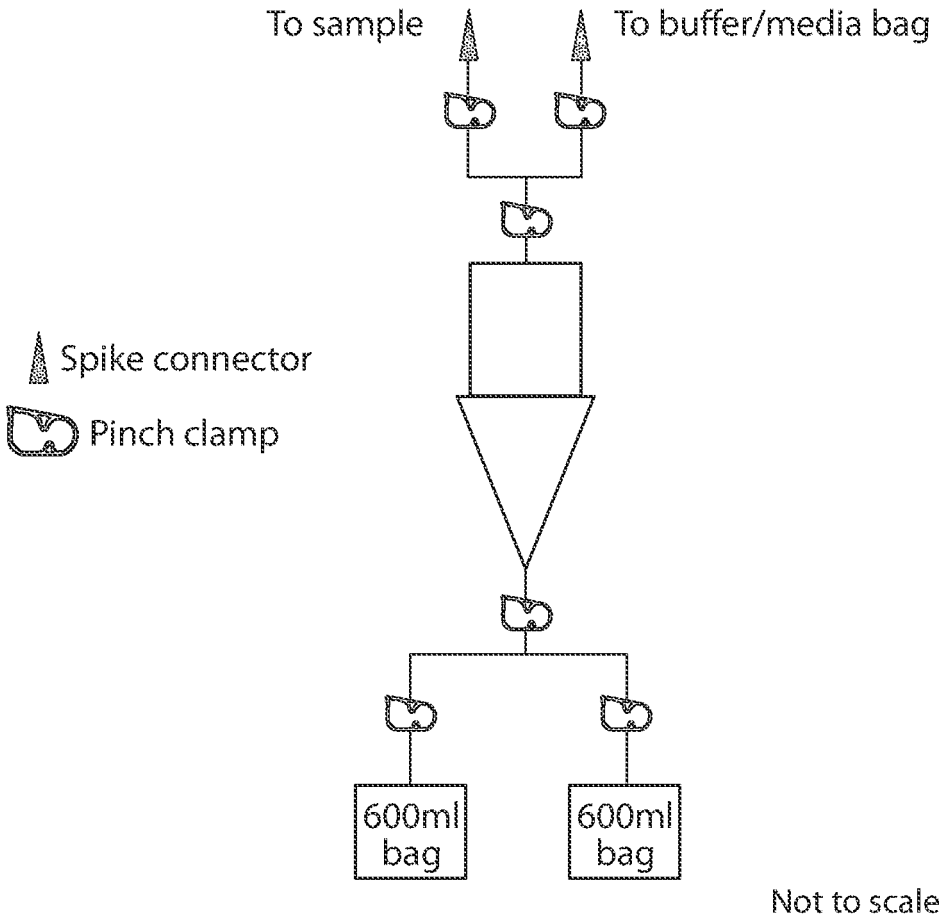
To sample
To buffer/media bag
Spike connector
Pinch clamp
600ml bag
600ml bag
Not to scale

FIG. 20

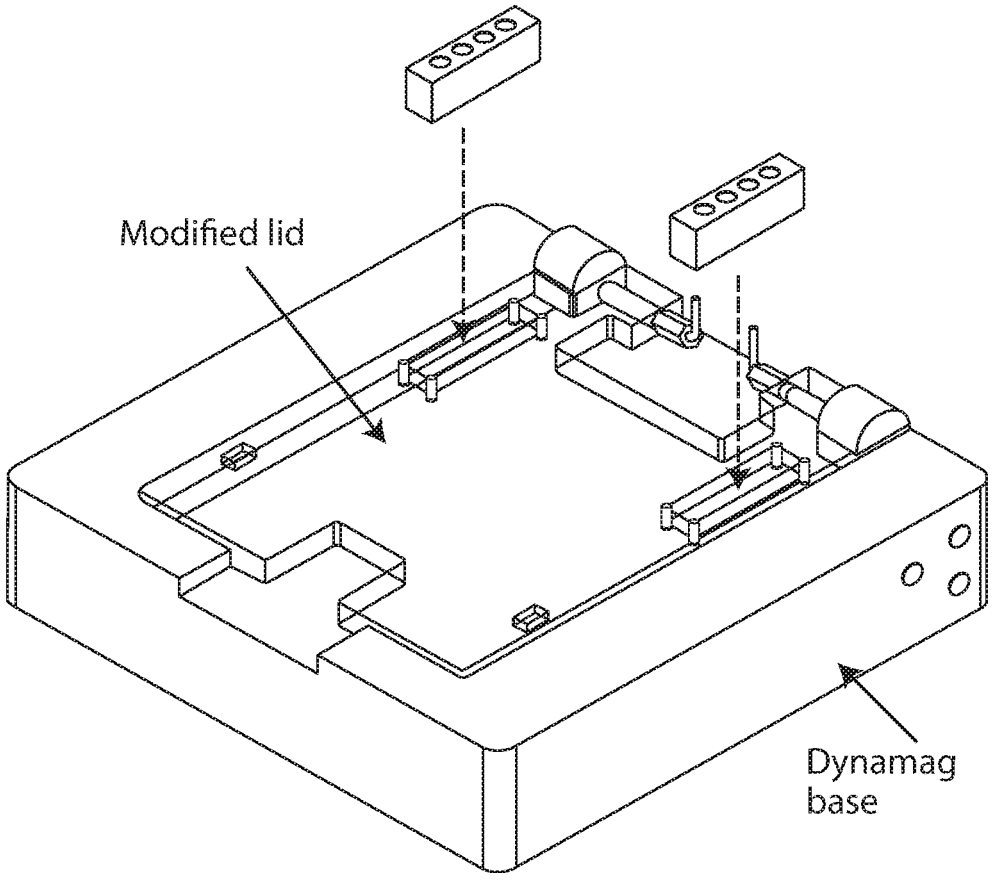

FIG. 21

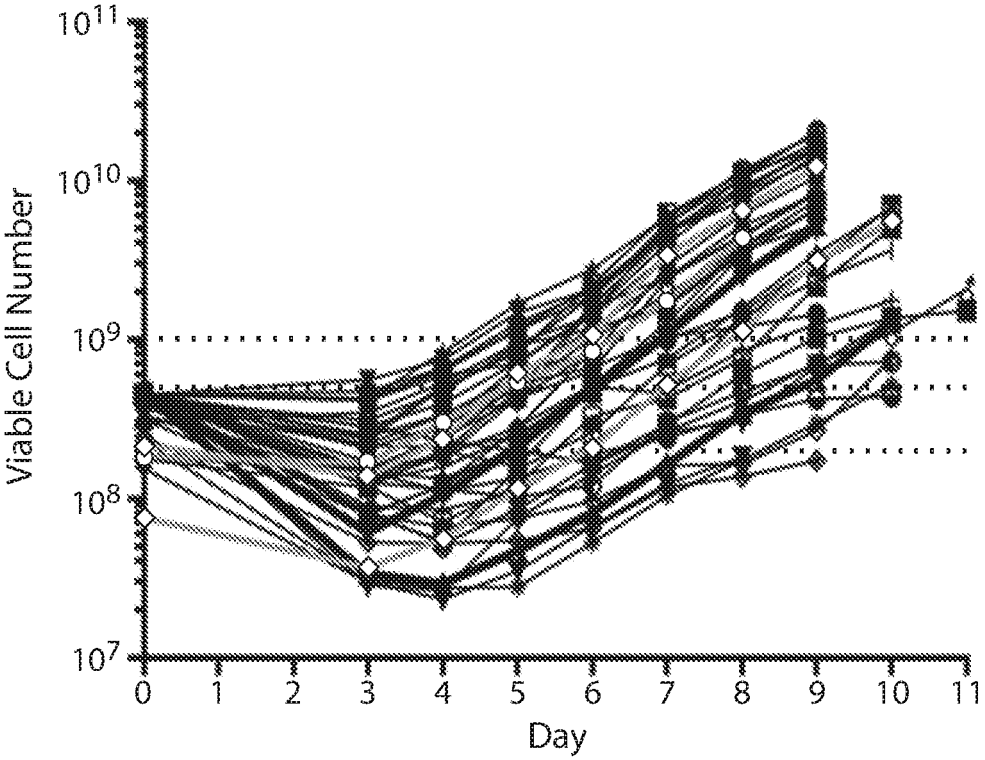
Viable Cell Number
10^{11}
10^{10}
10^{9}
10^{8}
10^{7}
0 1 2 3 4 5 6 7 8 9 10 11
Day

FIG. 22

	% of total live cells (total cell number)			
	CD45+/3+ Tcells	CD45+/14+ Monos	CD45+/19+ Bcells	CD45-/19+ Blasts/Nalm6
APH	51%	20%	12%	3%
CS5 Prod	58% (1.73e9)	17% (5.25e8)	7% (2.14e8)	2% (6.02e7)
Sepax Product	41% (1.71e8)	5% (1.95e7)	13% (5.3e7)	1% (5.13e6)
FAST Product	94% (4.7e7)	2% (8.3e5)	4% (1.8e6)	0% (8.34e3)

	% of total live cells (total cell number)			
	CD45+/3+ Tcells	CD45+/14+ Monos	CD45+/19+ Bcells	CD45-/19+ Blasts/Nalm6
APH	48%	14%	10%	5%
CS5 Prod	58% (5.2e8)	17% (1.57e8)	7% (6.41e7)	2% (1.8e7)
FAST Product	90% (1.22e8)	0% (3.96e5)	4% (5.5e6)	0% (7.32e3)

FIG. 23A

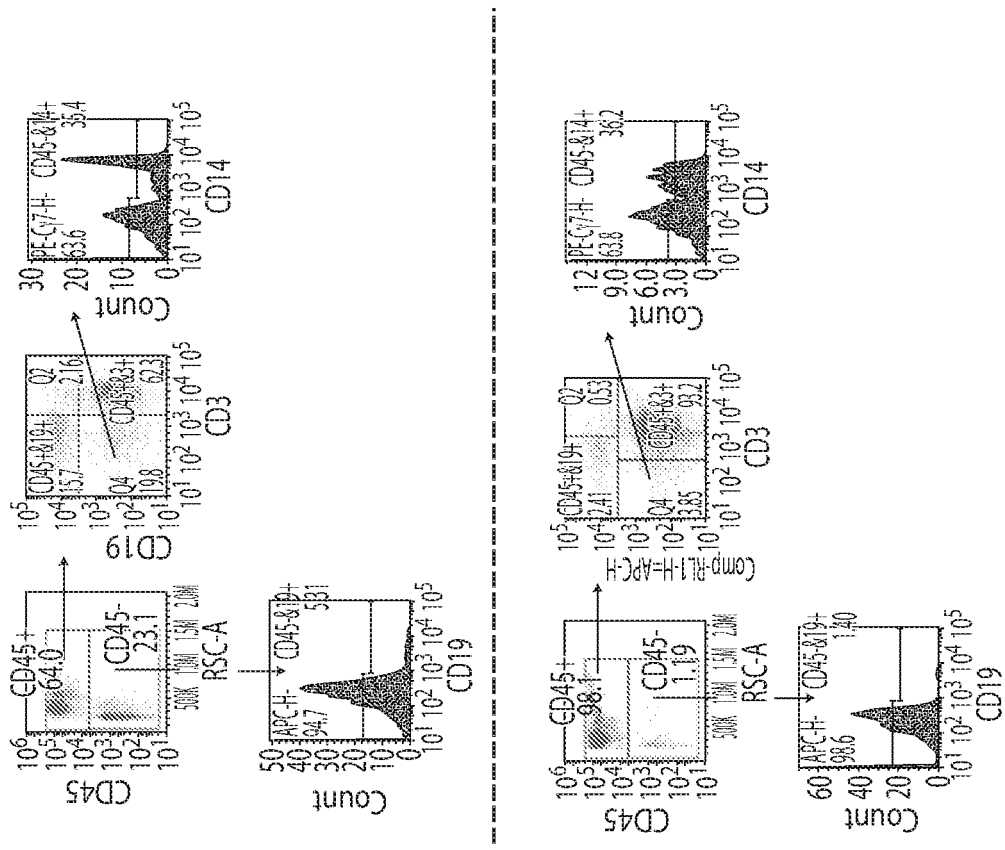

FIG. 23B

Experiment Arm 1

Sepax Product

CD45+/3+ Tcells	CD45+/14+ Monos	CD45+/19+ Bcells	CD45-/19+ Blasts/Nalm6
41% (1.71e8)	5% (1.95e7)	13% (5.3e7)	1% (5.13e6)

FAST product

CD45+/3+ Tcells	CD45+/14+ Monos	CD45+/19+ Bcells	CD45-/19+ Blasts/Nalm6
94% (4.7e7)	2% (8.3e5)	4% (1.8e6)	0% (8.34e3)

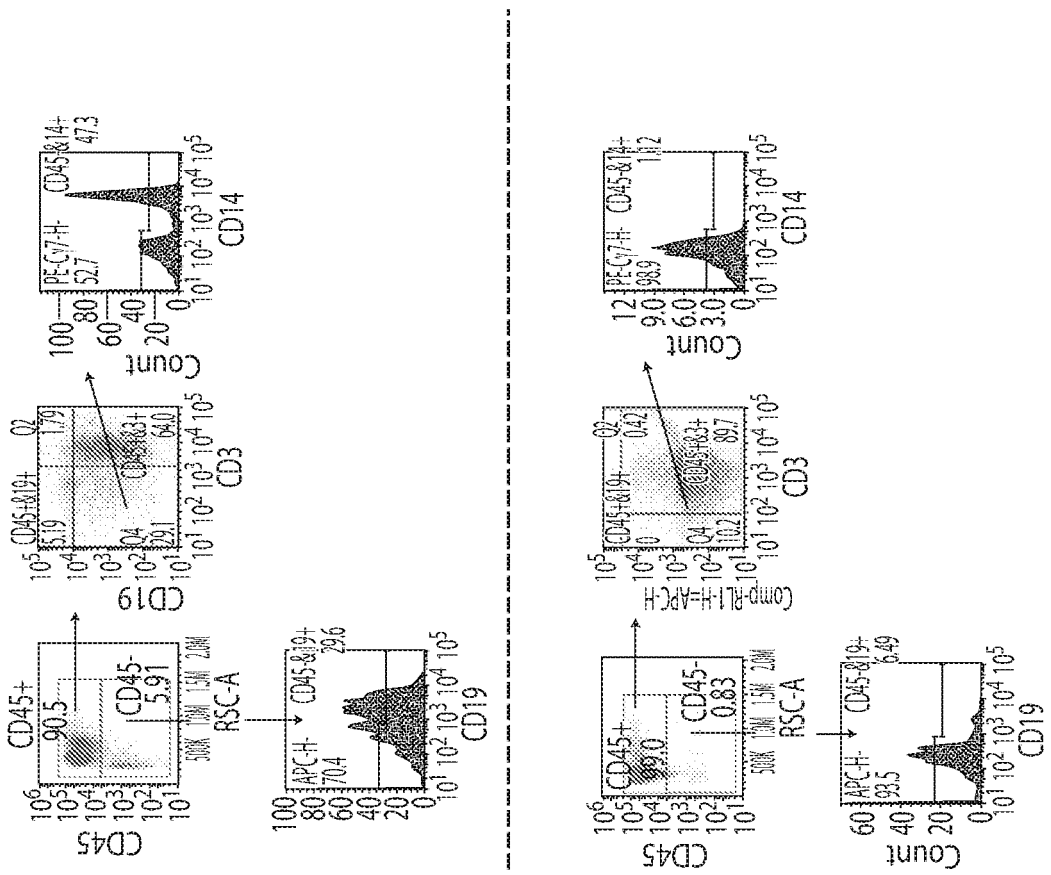

Experiment Arm 2

CS5 product

CD45+/3+ Tcells	CD45+/14+ Monos	CD45+/19+ Bcells	CD45-/19+ Blasts/Nalm6
58% (5.2e8)	17% (1.57e8)	7% (6.41e7)	2% (1.8e7)

FAST product

CD45+/3+ Tcells	CD45+/14+ Monos	CD45+/19+ Bcells	CD45-/19+ Blasts/Nalm6
90% (1.22e8)	0% (3.96e5)	4% (5.5e6)	0% (7.32e4)

FIG. 23C

	% of total live cells (total cell number)				
	CD45+/3+ Tcells	CD45+/14+ Monos	CD45+/19+ Bcells	CD45-/19+ Blasts/Nalm6
APH	56%	14%	12%	2%
CS5 Prod	58% (1.62e9)	15% (4.11e8)	12% (3.46e8)	2% (4.26e7)
Sepax Product	38% (2.52e8)	28% (1.84e8)	18% (1.2e8)	0% (8.1e5)
FAST Product	95% (8.7e7)	1% (1.2e6)	5% (4.3e6)	0% (6.0e3)

	% of total live cells (total cell number)			
	CD45+/3+ Tcells	CD45+/14+ Monos	CD45+/19+ Bcells	CD45-/19+ Blasts/Nalm6
APH	53%	16%	16%	3%
CS5 Prod	57% (1.05e9)	13% (2.38e8)	12% (2.29e8)	3% (5.28e7)
FAST Product	92% (2.8e8)	0% (8.25e5)	2% (4.86e6)	0% (2.36e4)

FIG. 24A

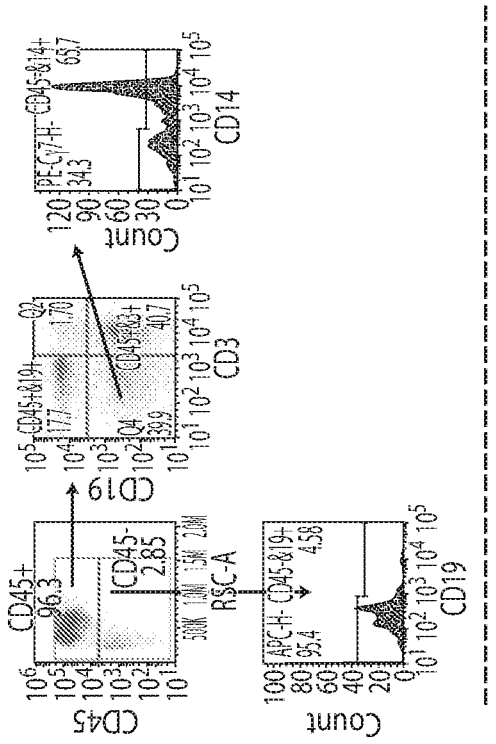

FIG. 24B

Experiment Arm 1

Sepax Product

CD45+/3+ Tcells	CD45+/14+ Monos	CD45+/19+ Bcells	CD45-/19+ Blasts/Nalm6
38% (2.52e8)	28% (1.84e8)	18% (1.2e8)	0% (8.1e5)

FAST product

CD45+/3+ Tcells	CD45+/14+ Monos	CD45+/19+ Bcells	CD45-/19+ Blasts/Nalm6
95% (8.7e7)	1% (1.2e6)	5% (4.3e6)	0% (6.0e3)

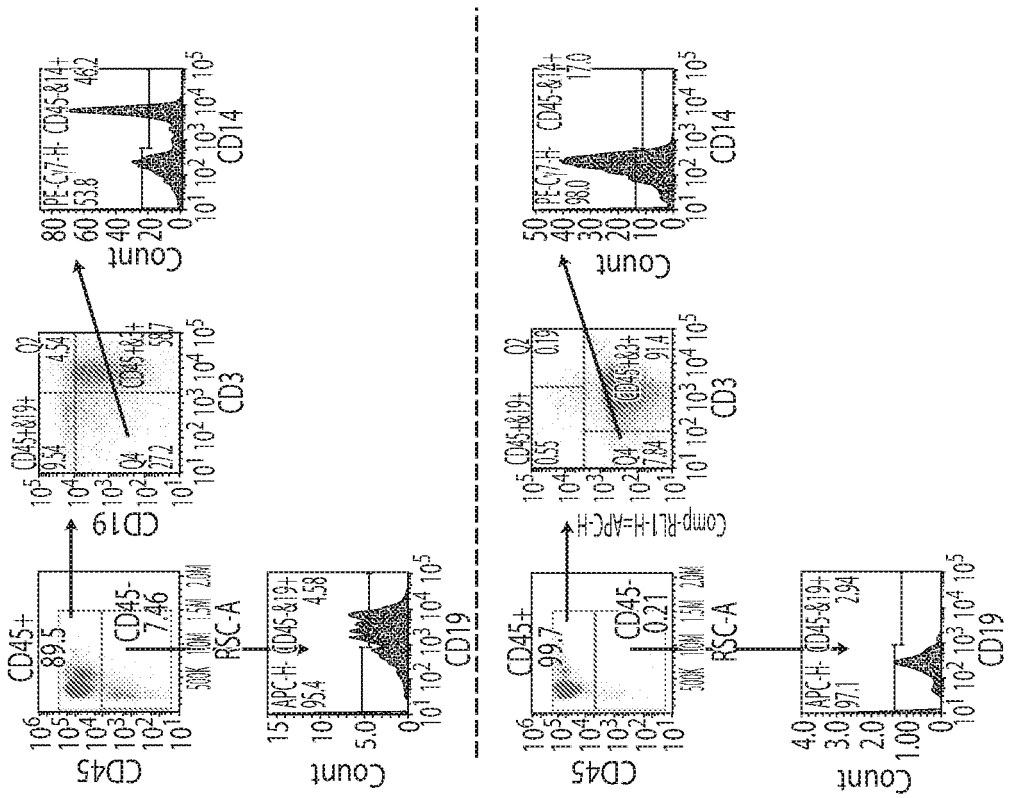

Experiment Arm 2

CS5 product

CD45+/3+ Tcells	CD45+/14+ Monos	CD45+/19+ Bcells	CD45-/19+ Blasts/Nalm6
57% (1.05e9)	13% (2.38e8)	12% (2.29e8)	3% (5.28e7)

FAST product

CD45+/3+ Tcells	CD45+/14+ Monos	CD45+/19+ Bcells	CD45-/19+ Blasts/Nalm6
92% (2.8e8)	0% (8.25e5)	2% (4.86e6)	0% (2.36e4)

FIG. 24C

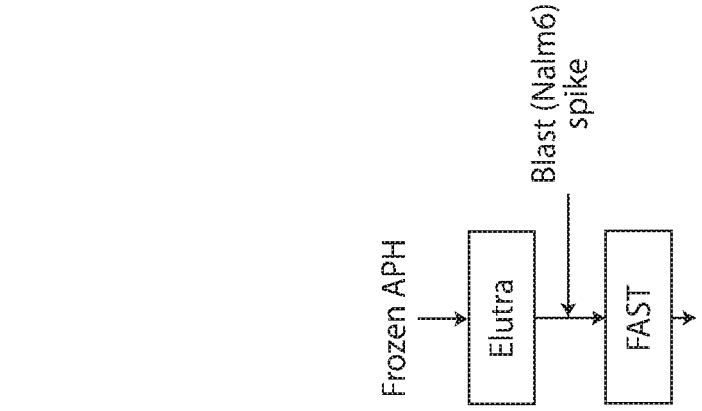

	% of total live cells (total cell number)			
	CD45+/3+ Tcells	CD45+/14+ Monos	CD45+/19+ Bcells	CD45-/19+ Blasts/Nalm6
APH	20%	43%	5%	2%
Elutra Product (pre-Nalm6 spike)	32% (3.98E7)	26% (3.26E7)	4% (5.36E6)	0% (5.36E4)
Elutra Product (post-Nalm6 spike)	29% (4.1E7)	20% (2.94E7)	7% (9.86E6)	24% (3.42E7)
FAST Product	95% (1.37e7)	1% (1.77e5)	0% (4.67E4)	0% (2.24E4)

FIG. 25A

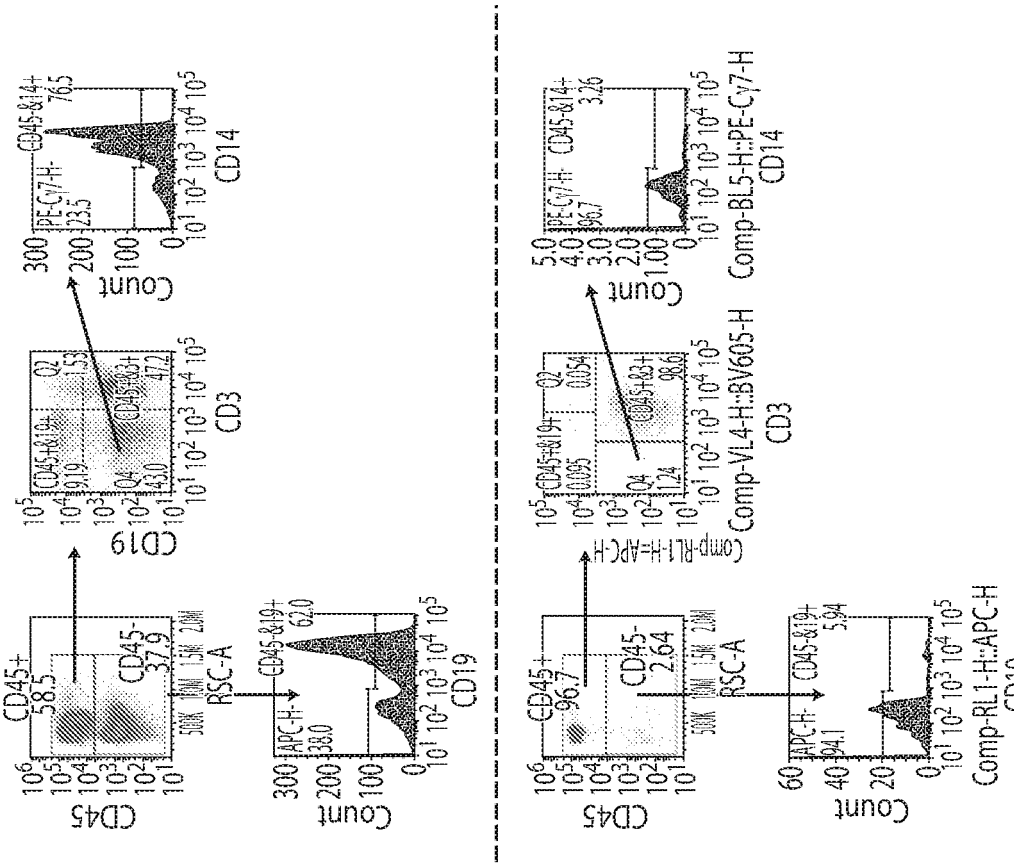

FIG. 25B

Elutra Product (post-Nalm6 spike)			
CD45+/3+ Tcells	CD45+/14+ Monos	CD45+/19+ Bcells	CD45-/19+ Blasts/Nalm6
29% (4.1E7)	20% (2.94E7)	7% (9.86E6)	24% (3.42E7)

Elutra Product (post-Nalm6 spike)			
CD45+/3+ Tcells	CD45+/14+ Monos	CD45+/19+ Bcells	CD45-/19+ Blasts/Nalm6
95% (1.37e7)	1% (1.77e5)	0% (4.67E4)	0% (2.24E4)

TRD Feasibility (healthy donor)	B % in Apheresis (post-wash)	B % after CliniMACs process
CliniMACs feasibility study #1	17.6%	0.01%
CliniMACs feasibility study #1	15.0%	0.05%

MP Patient AAAG1 (high blasts)	CliniMacs Collection	CliniMacs Negative Faction	Negative Fraction
T-cells	49.0	15.0	15.1
B-cells	**0.1**	78.2	**76.6**
NK cells	47.5	0.7	6.1
NKT cells	25.2	0.6	1.4
Monocytes	1.9	0.1	1.3
Granulocytes	0.1	0.0	0.0
Dendritic	0.4	0.0	0.0

FIG. 26A

TRD-TR#	T % in Apheresis	T % in seeded cells	T Cell Yield Recovery	B % in Apheresis	B % in seeded cells	Monocyte % in Apheresis	Monocyte % in seeded cells
TR149 (Process B)	55.0%	20.8%	18% for Sepax and 20% for CD3/CD28 positive selection	17.7%	10.5%	15.3%	32.1%
TR150 (Elutra + CliniMACs)		82.4%	65% for Elutra; 85.0% for CliniMACs		0.0%		1.1%
TR151 (Elutra +Positive selection)		32.6%	65% for Elutra; 20% for CD3/CD28 positive selection		11.7%		0.5%

FIG. 26B

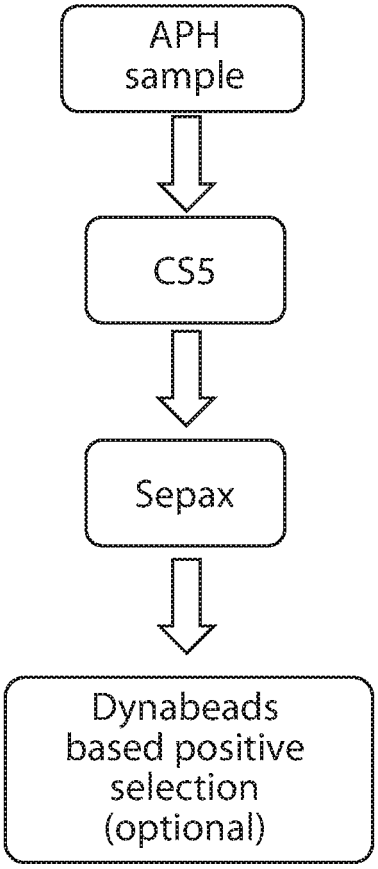
APH sample
CS5
Sepax
Dynabeads based positive selection (optional)

FIG. 27

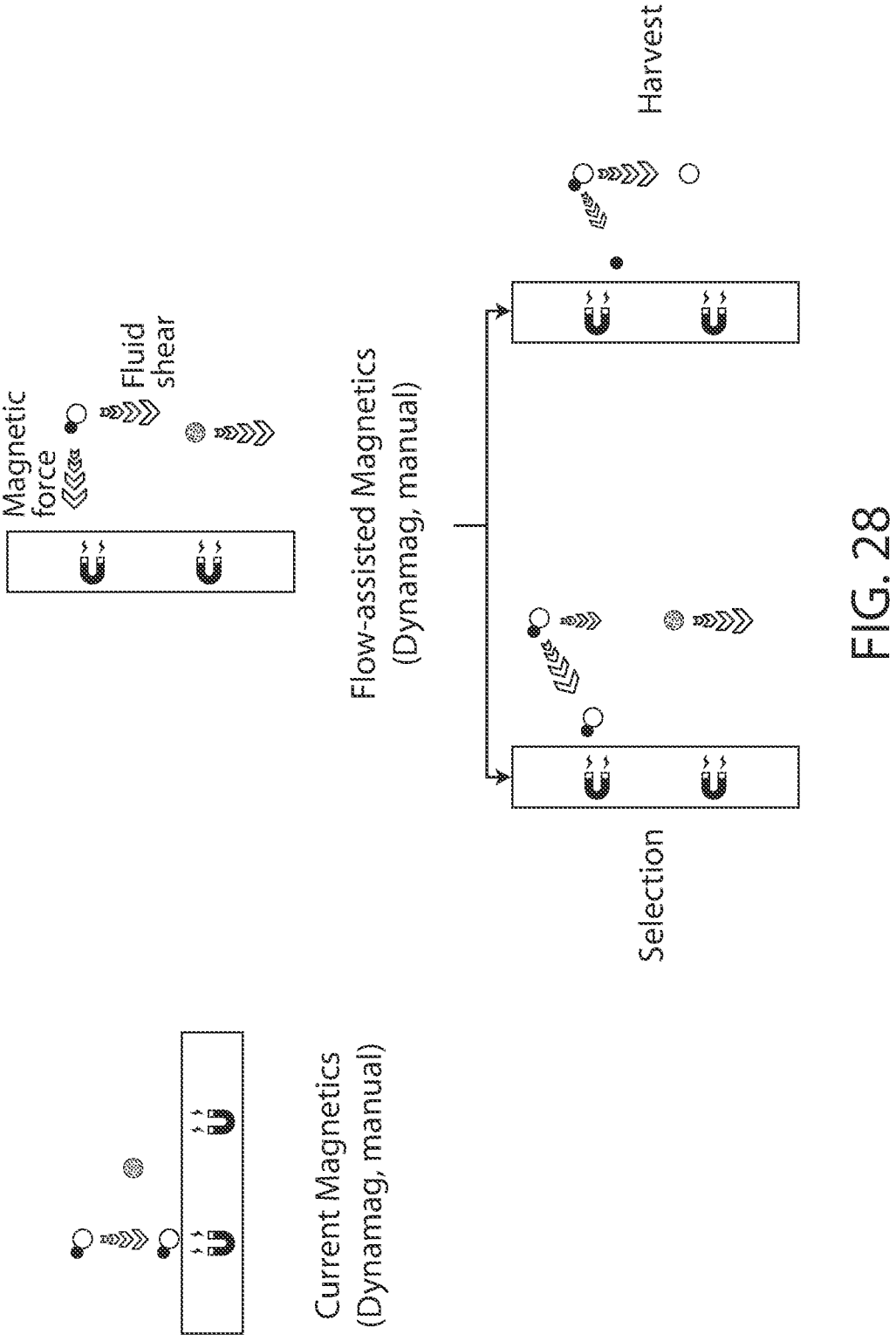
Magnetic force
Fluid shear
Flow-assisted Magnetics (Dynamag, manual)
Harvest
Selection
Current Magnetics (Dynamag, manual)

FIG. 28

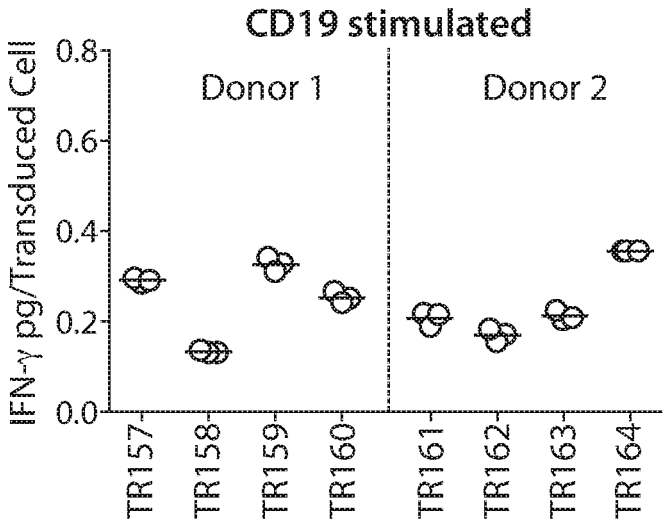

FIG. 29A

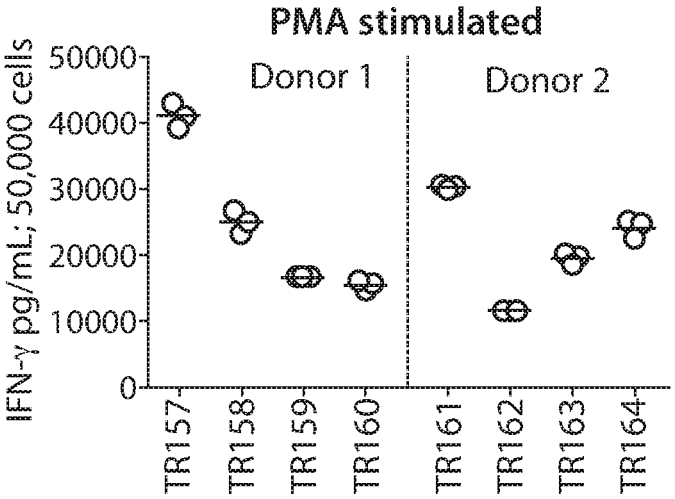

FIG. 29B

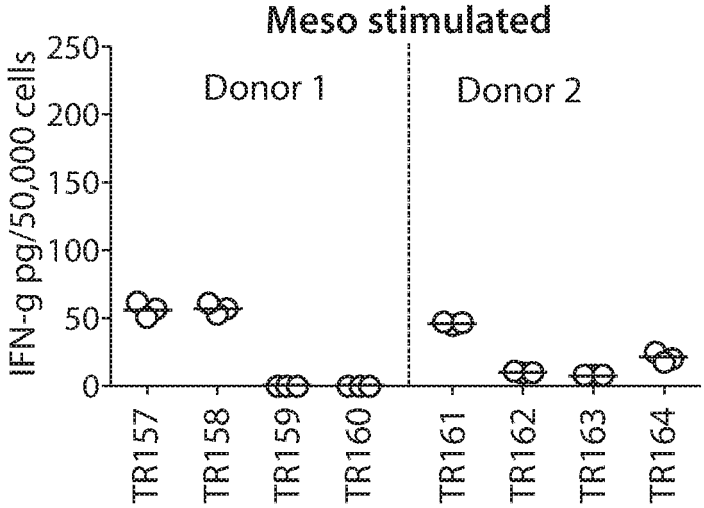

FIG. 29C

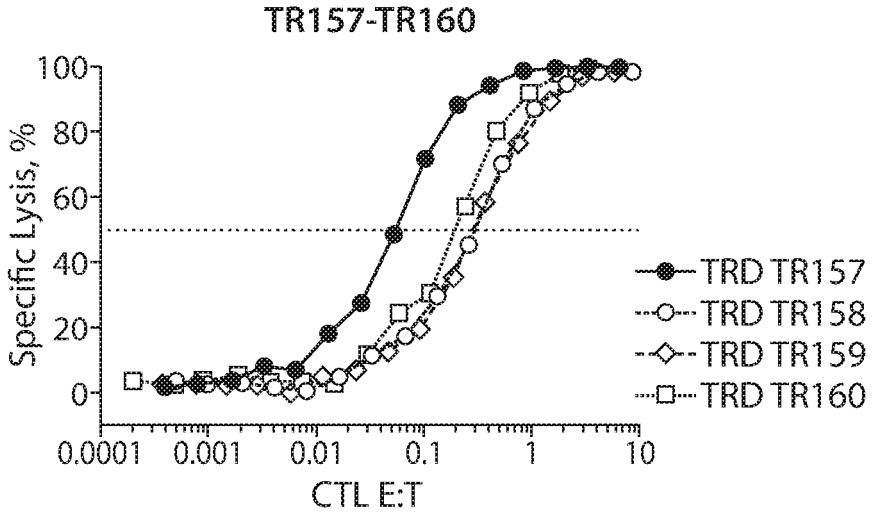

FIG. 30A

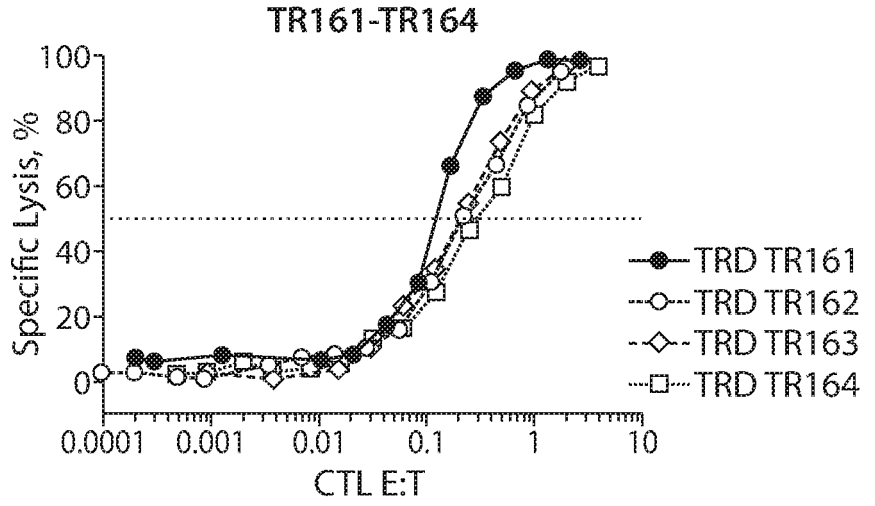

FIG. 30B

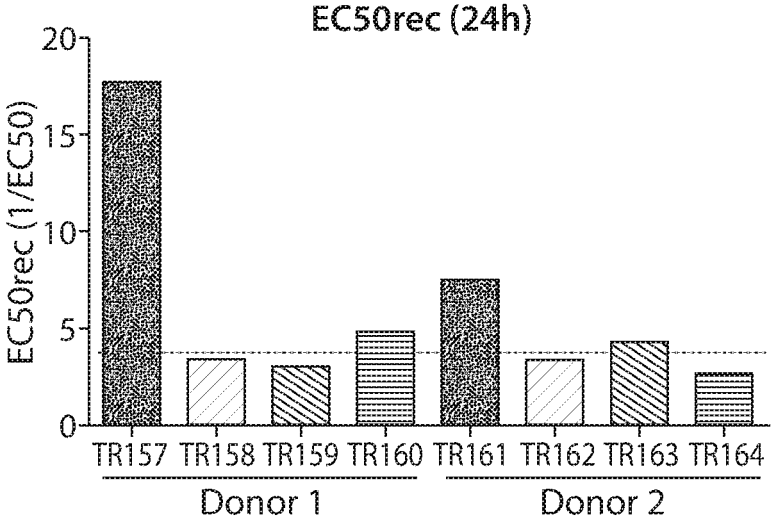

FIG. 30C

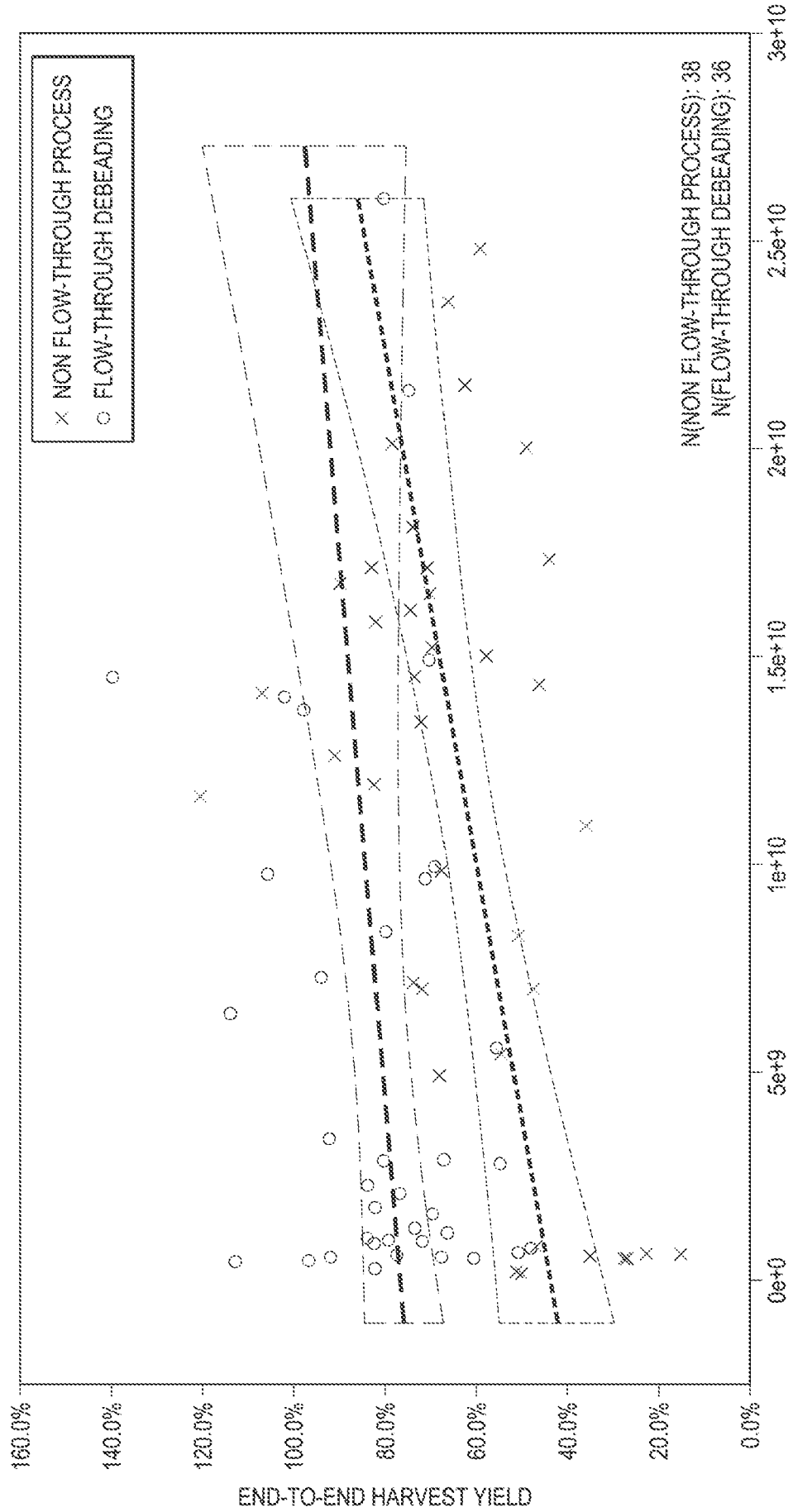
NON FLOW-THROUGH PROCESS
FLOW-THROUGH DEBEADING
N(NON FLOW-THROUGH PROCESS): 38
N(FLOW-THROUGH DEBEADING): 36
END-TO-END HARVEST YIELD
160.0%
140.0%
120.0%
100.0%
80.0%
60.0%
40.0%
20.0%
0.0%
WASTE/SAMPLE INPUT (TOTAL CELLS)
0e+0
5e+9
1e+10
1.5e+10
2e+10
2.5e+10
3e+10

FIG. 31

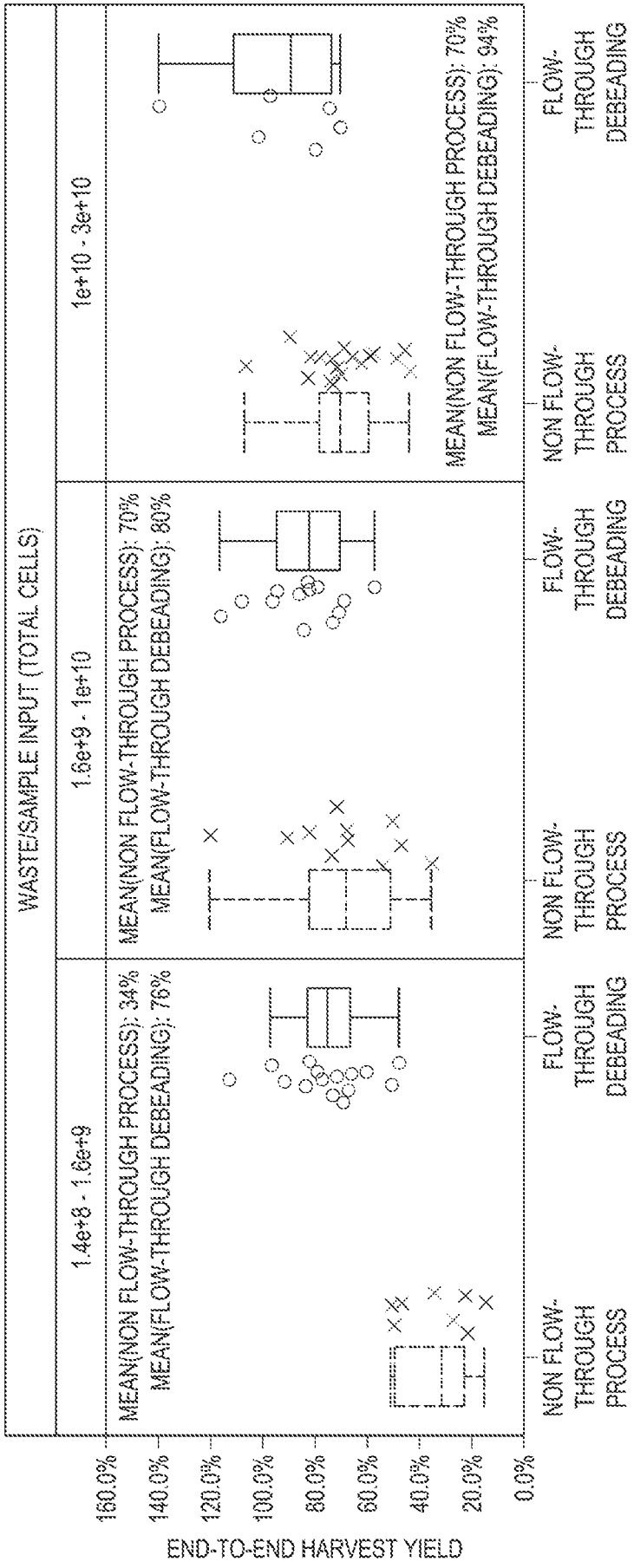
WASTE/SAMPLE INPUT (TOTAL CELLS)
1.4e+8 - 1.6e+9
1.6e+9 - 1e+10
1e+10 - 3e+10
MEAN(NON FLOW-THROUGH PROCESS): 34%
MEAN(FLOW-THROUGH DEBEADING): 76%
MEAN(NON FLOW-THROUGH PROCESS): 70%
MEAN(FLOW-THROUGH DEBEADING): 80%
MEAN(NON FLOW-THROUGH PROCESS): 70%
MEAN(FLOW-THROUGH DEBEADING): 94%
160.0%
140.0%
120.0%
100.0%
80.0%
60.0%
40.0%
20.0%
0.0%
END-TO-END HARVEST YIELD
NON FLOW-THROUGH PROCESS
FLOW-THROUGH DEBEADING
NON FLOW-THROUGH PROCESS
FLOW-THROUGH DEBEADING
NON FLOW-THROUGH PROCESS
FLOW-THROUGH DEBEADING
DEBEADING TYPE

FIG. 32