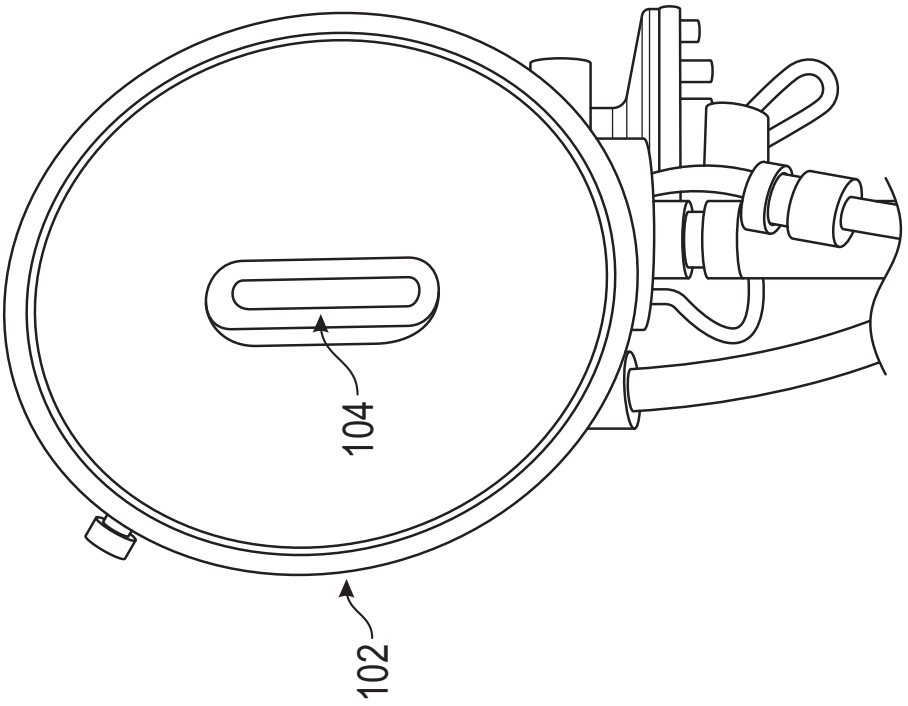

FIG. 1B

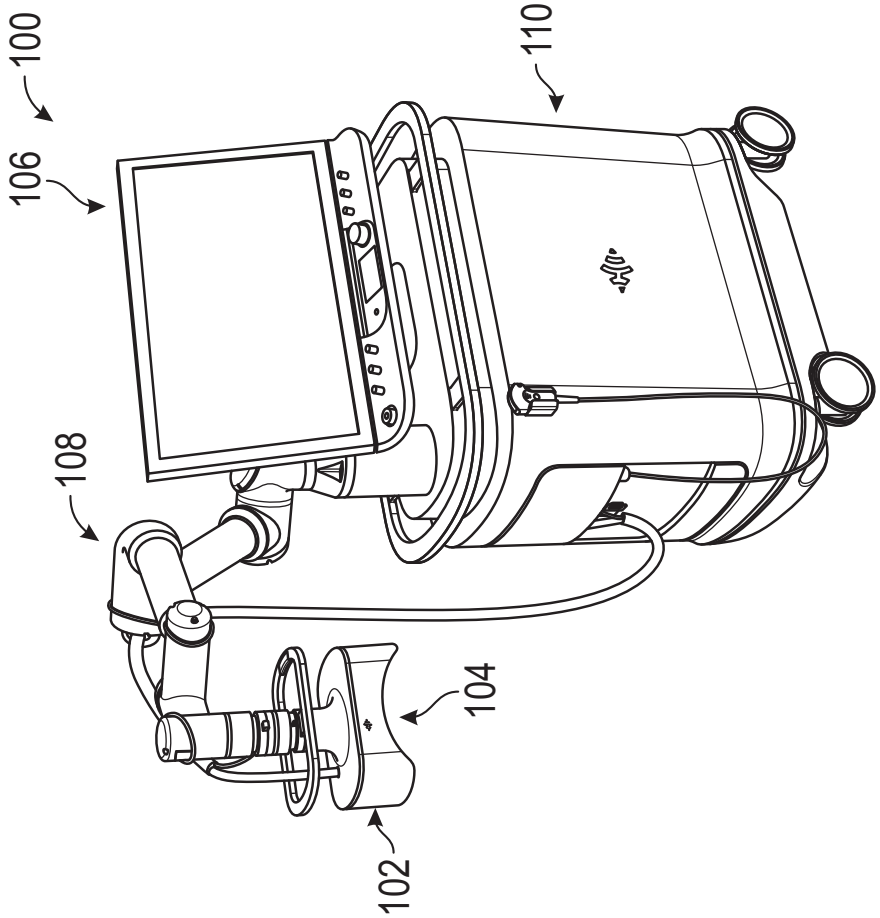

FIG. 1A

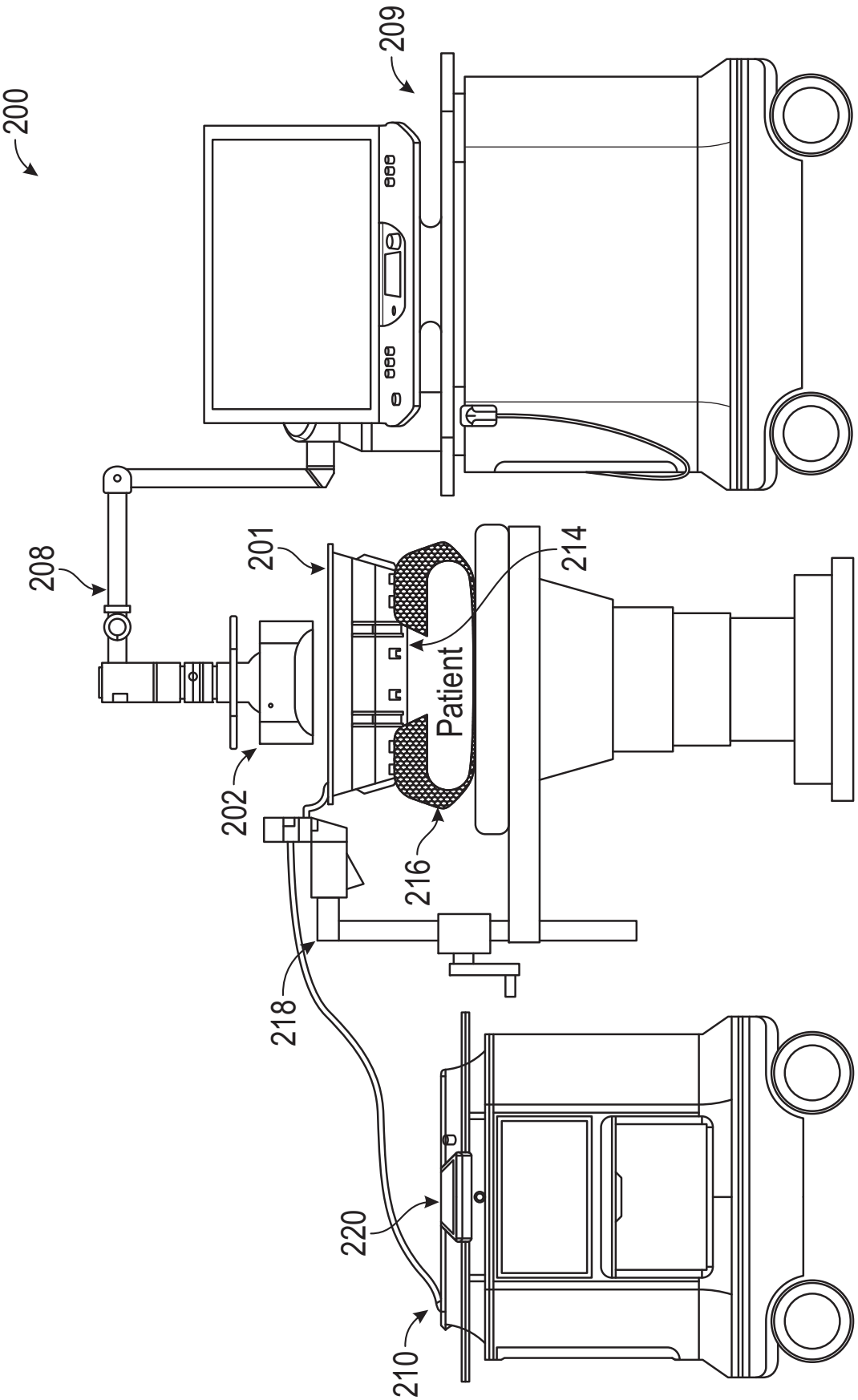

FIG. 2

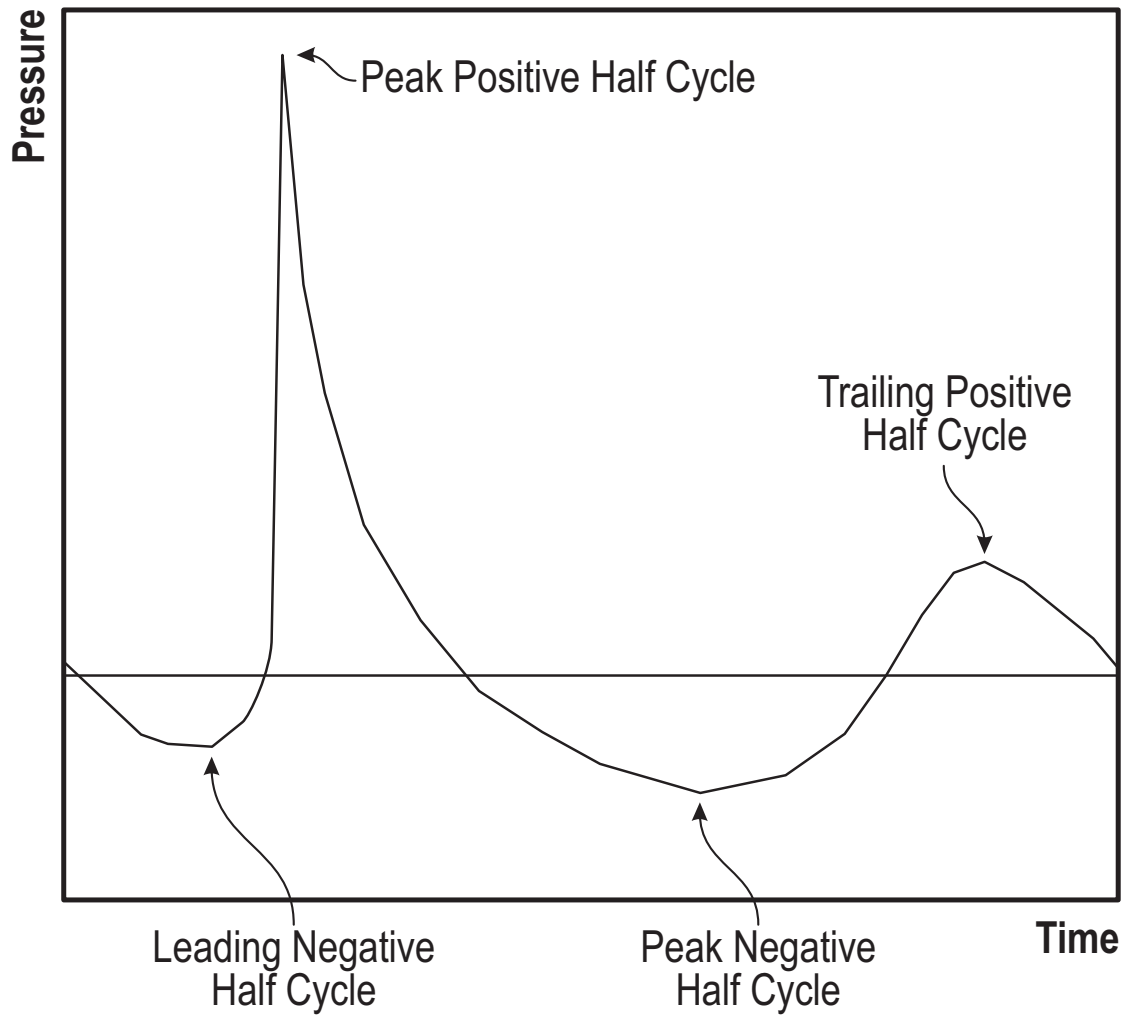
Pressure
Peak Positive Half Cycle
Trailing Positive
Half Cycle
Leading Negative
Half Cycle
Peak Negative
Half Cycle
Time

FIG. 3

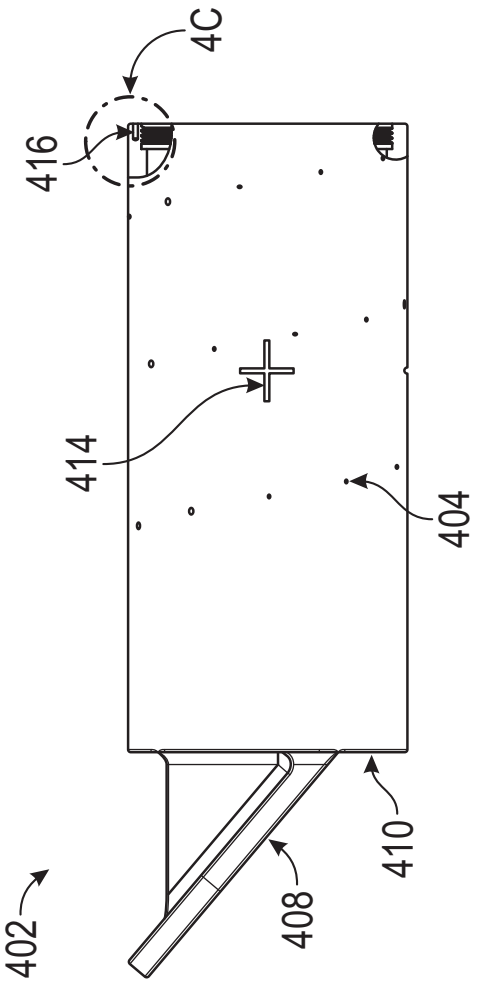

FIG. 4B

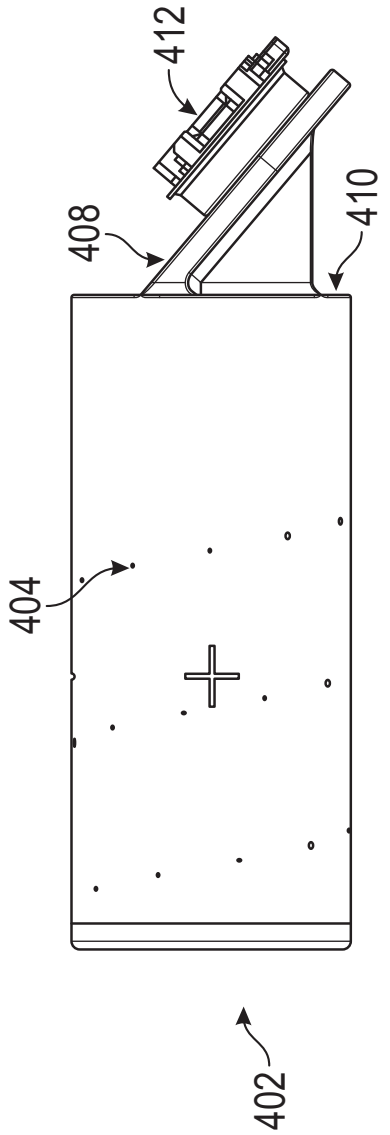

FIG. 4D

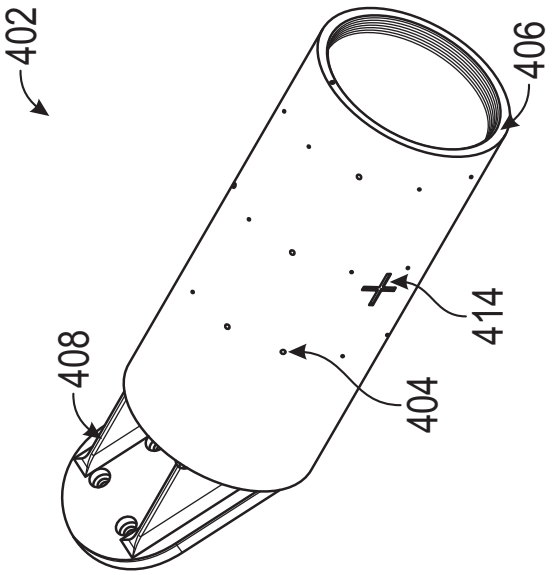

FIG. 4A

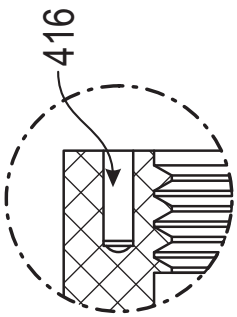

FIG. 4C

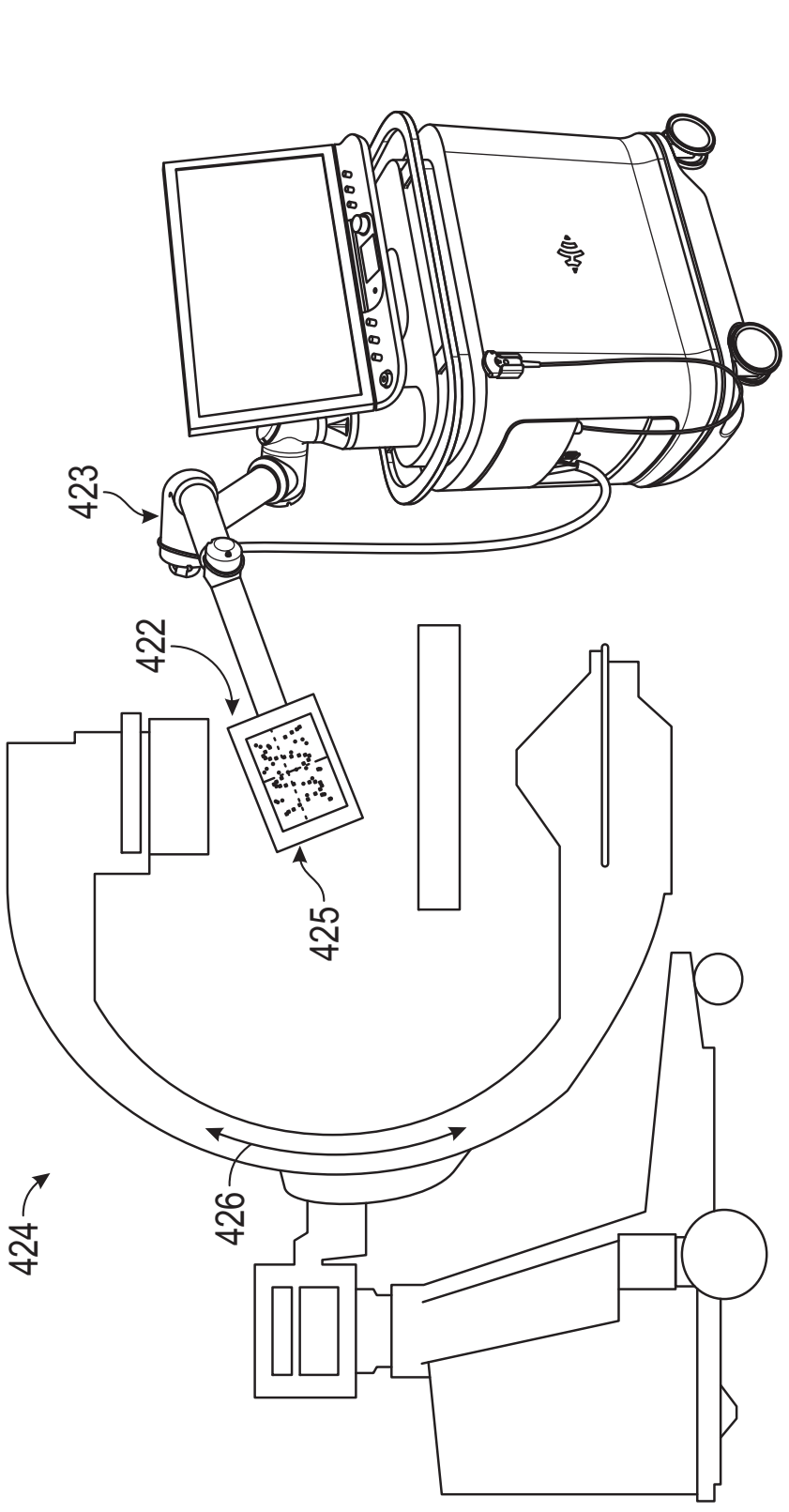

FIG. 4E

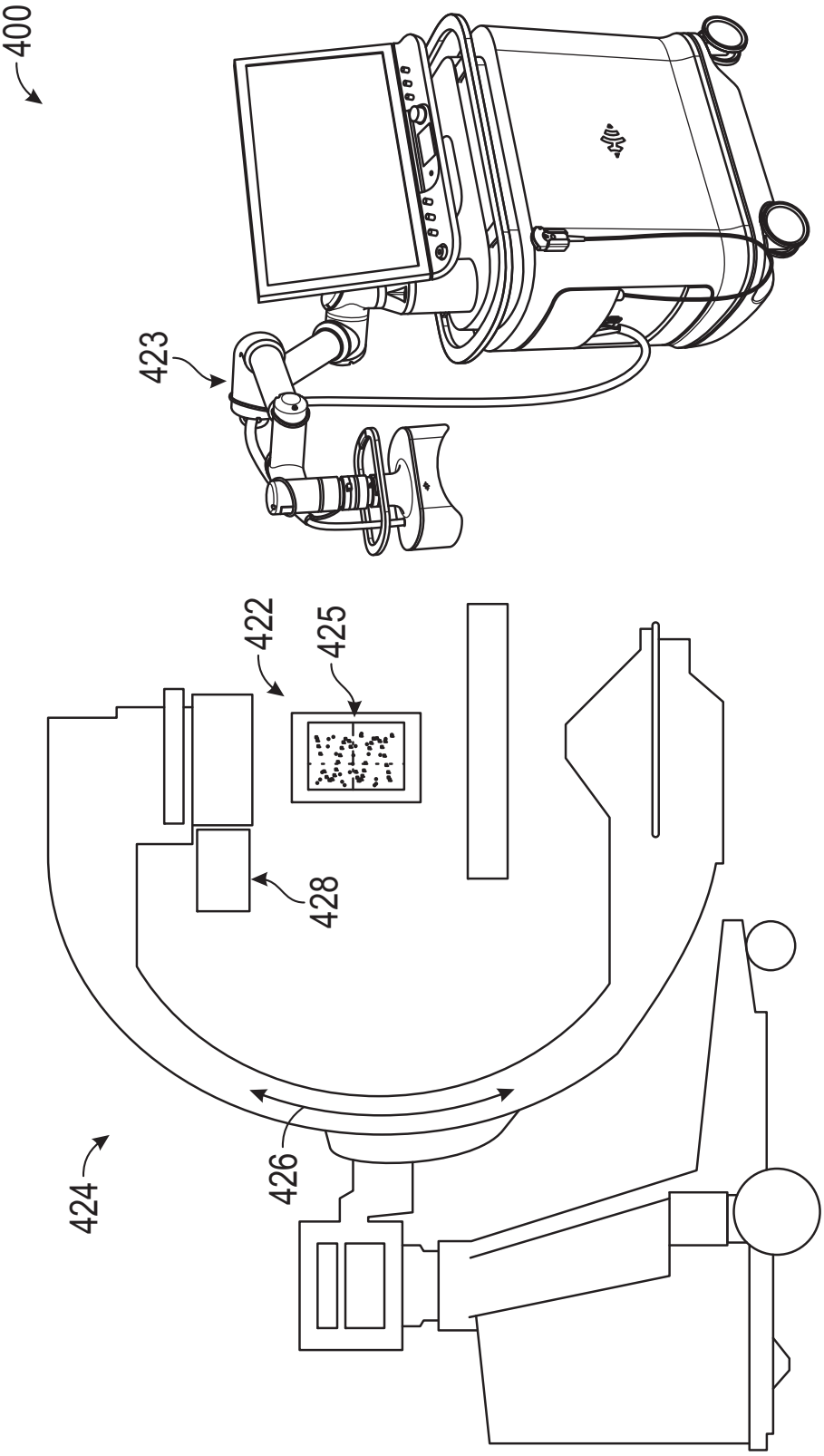

FIG. 4F

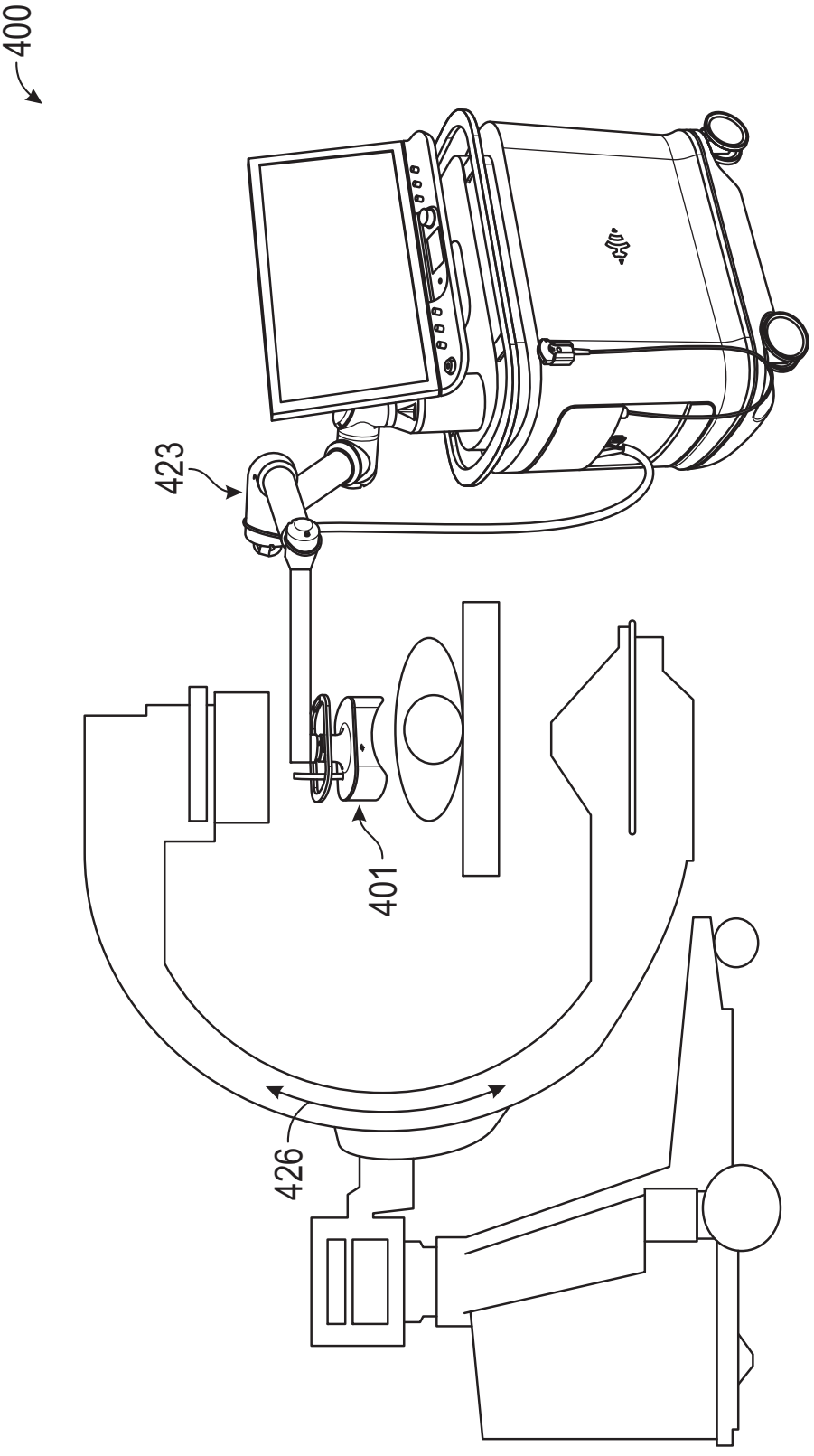

FIG. 4G

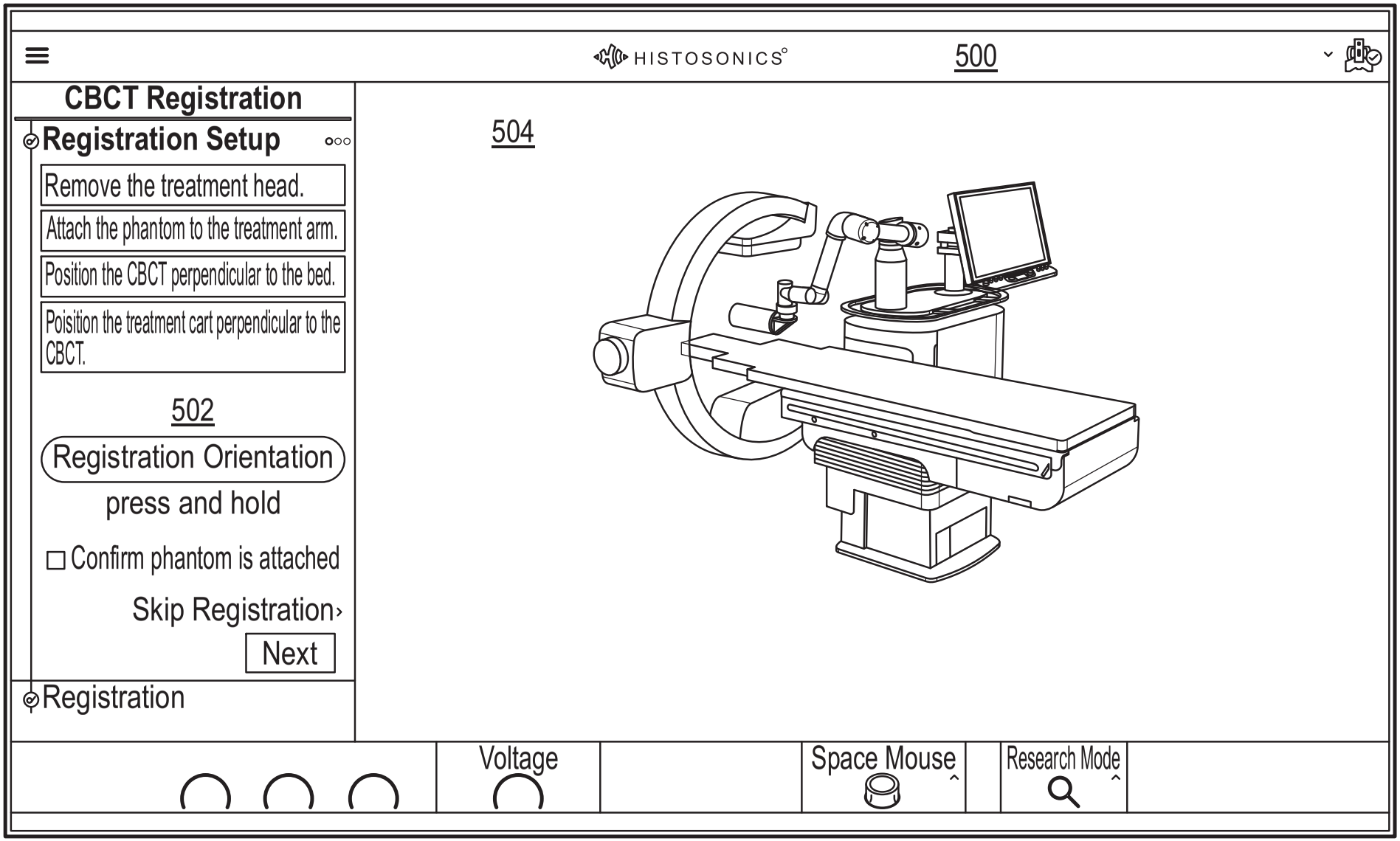
HISTOSONICS
500
CBCT Registration
Registration Setup
Remove the treatment head.
Attach the phantom to the treatment arm.
Position the CBCT perpendicular to the bed.
Poisition the treatment cart perpendicular to the CBCT.
502
Registration Orientation
press and hold
Confirm phantom is attached
Skip Registration
Next
Registration
504
Voltage
Space Mouse
Research Mode

FIG. 5

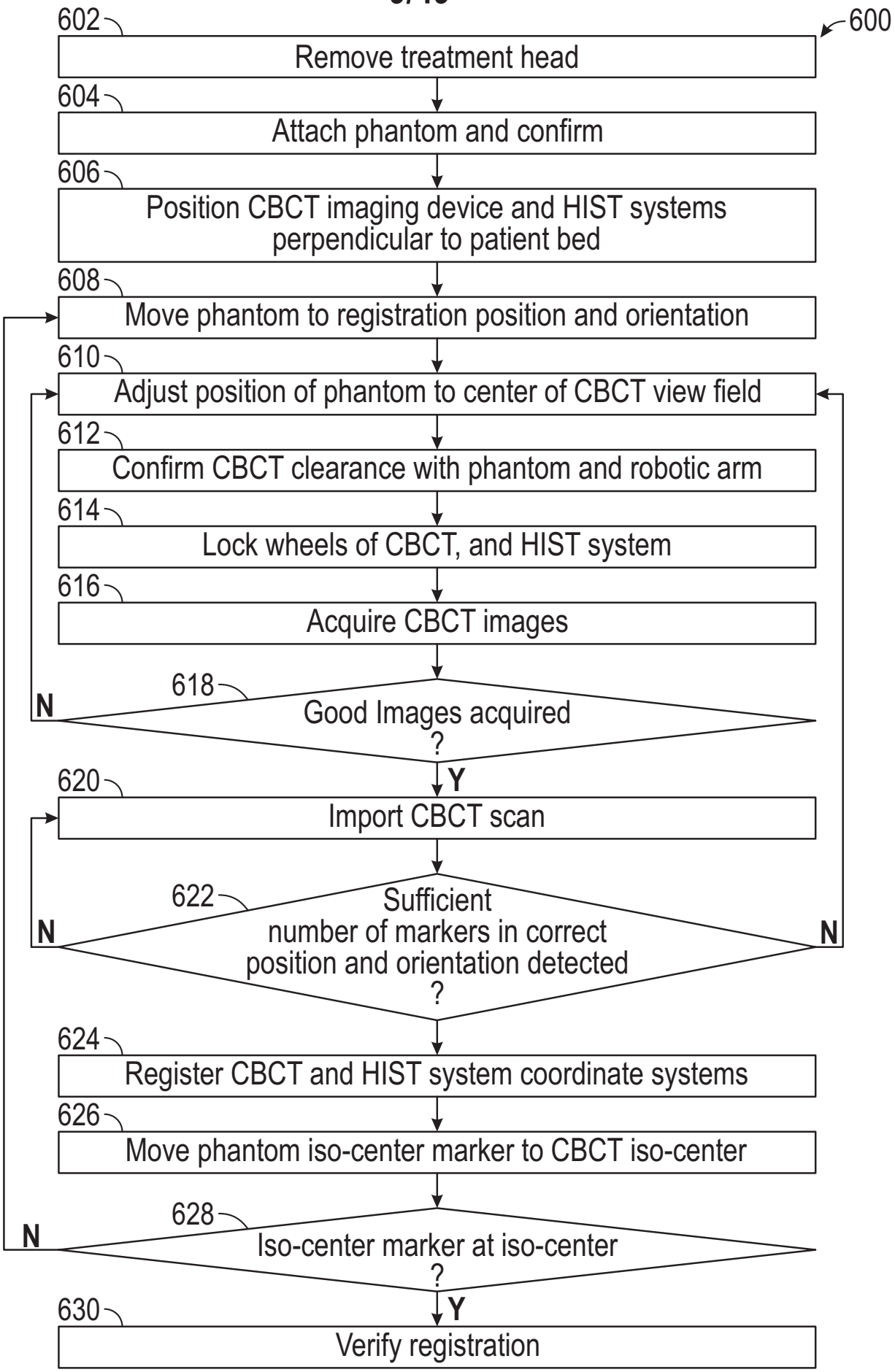
600
602
Remove treatment head
604
Attach phantom and confirm
606
Position CBCT imaging device and HIST systems perpendicular to patient bed
608
Move phantom to registration position and orientation
610
Adjust position of phantom to center of CBCT view field
612
Confirm CBCT clearance with phantom and robotic arm
614
Lock wheels of CBCT, and HIST system
616
Acquire CBCT images
618
Good Images acquired ?
N
Y
620
Import CBCT scan
622
Sufficient number of markers in correct position and orientation detected ?
N
N
624
Register CBCT and HIST system coordinate systems
626
Move phantom iso-center marker to CBCT iso-center
628
Iso-center marker at iso-center ?
N
Y
630
Verify registration

FIG. 6

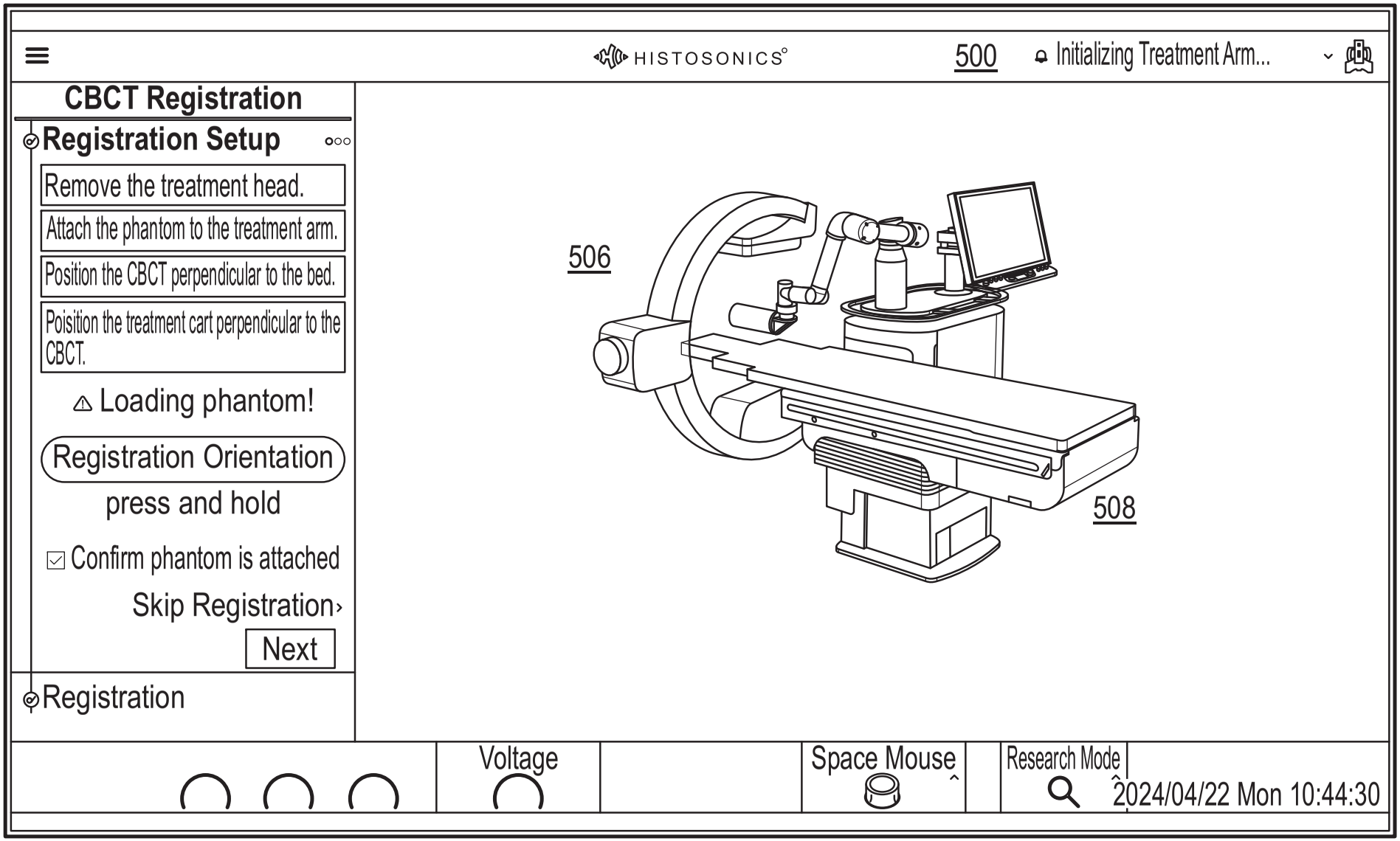
HISTOSONICS
500
Initializing Treatment Arm...
CBCT Registration
Registration Setup
Remove the treatment head.
Attach the phantom to the treatment arm.
Position the CBCT perpendicular to the bed.
Poisition the treatment cart perpendicular to the CBCT.
Loading phantom!
Registration Orientation
press and hold
Confirm phantom is attached
Skip Registration
Next
Registration
506
508
Voltage
Space Mouse
Research Mode
2024/04/22 Mon 10:44:30

FIG. 7

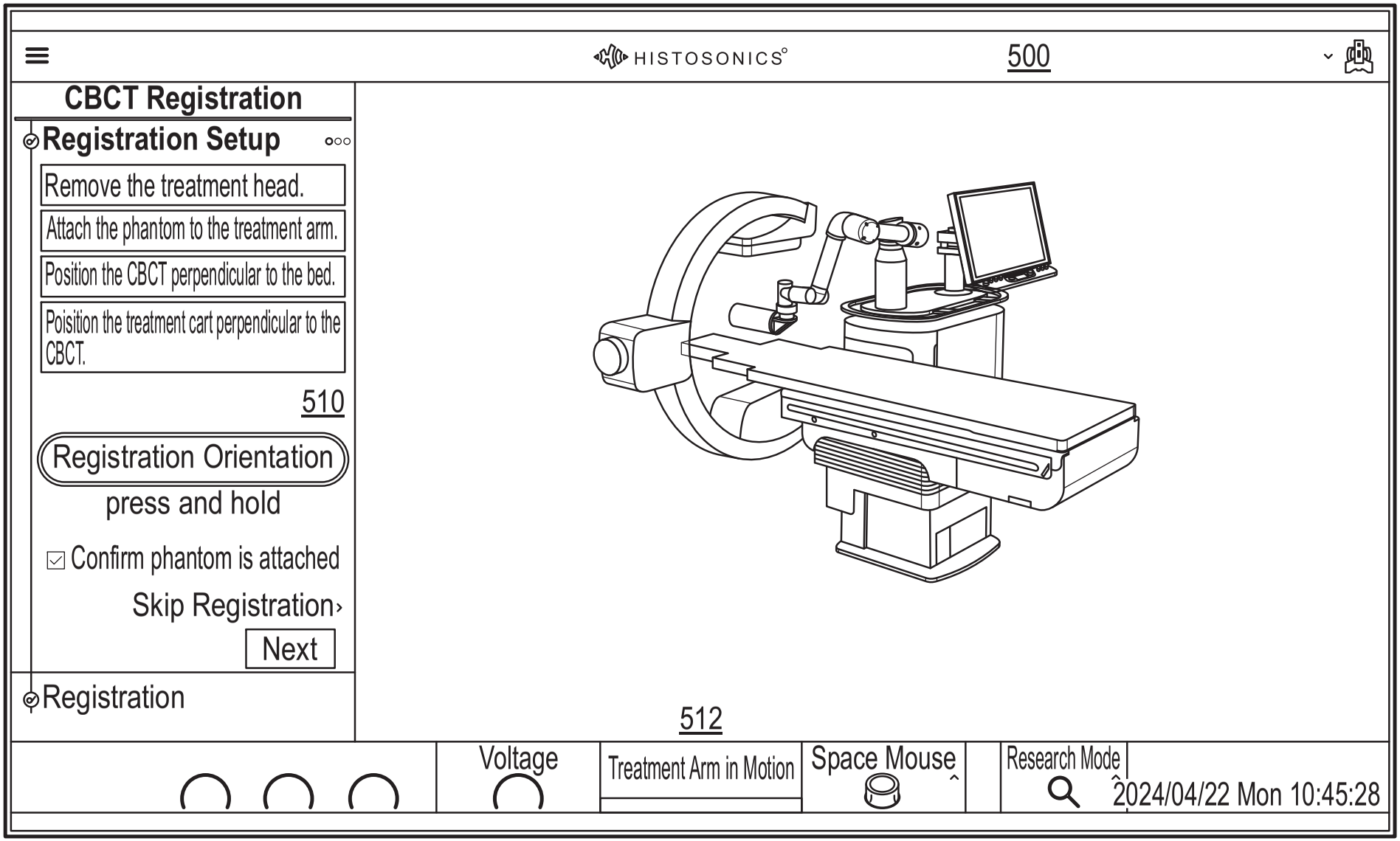
HISTOSONICS
500
CBCT Registration
Registration Setup
Remove the treatment head.
Attach the phantom to the treatment arm.
Position the CBCT perpendicular to the bed.
Poisition the treatment cart perpendicular to the CBCT.
510
Registration Orientation
press and hold
Confirm phantom is attached
Skip Registration
Next
Registration
512
Voltage
Treatment Arm in Motion
Space Mouse
Research Mode
2024/04/22 Mon 10:45:28

FIG. 8

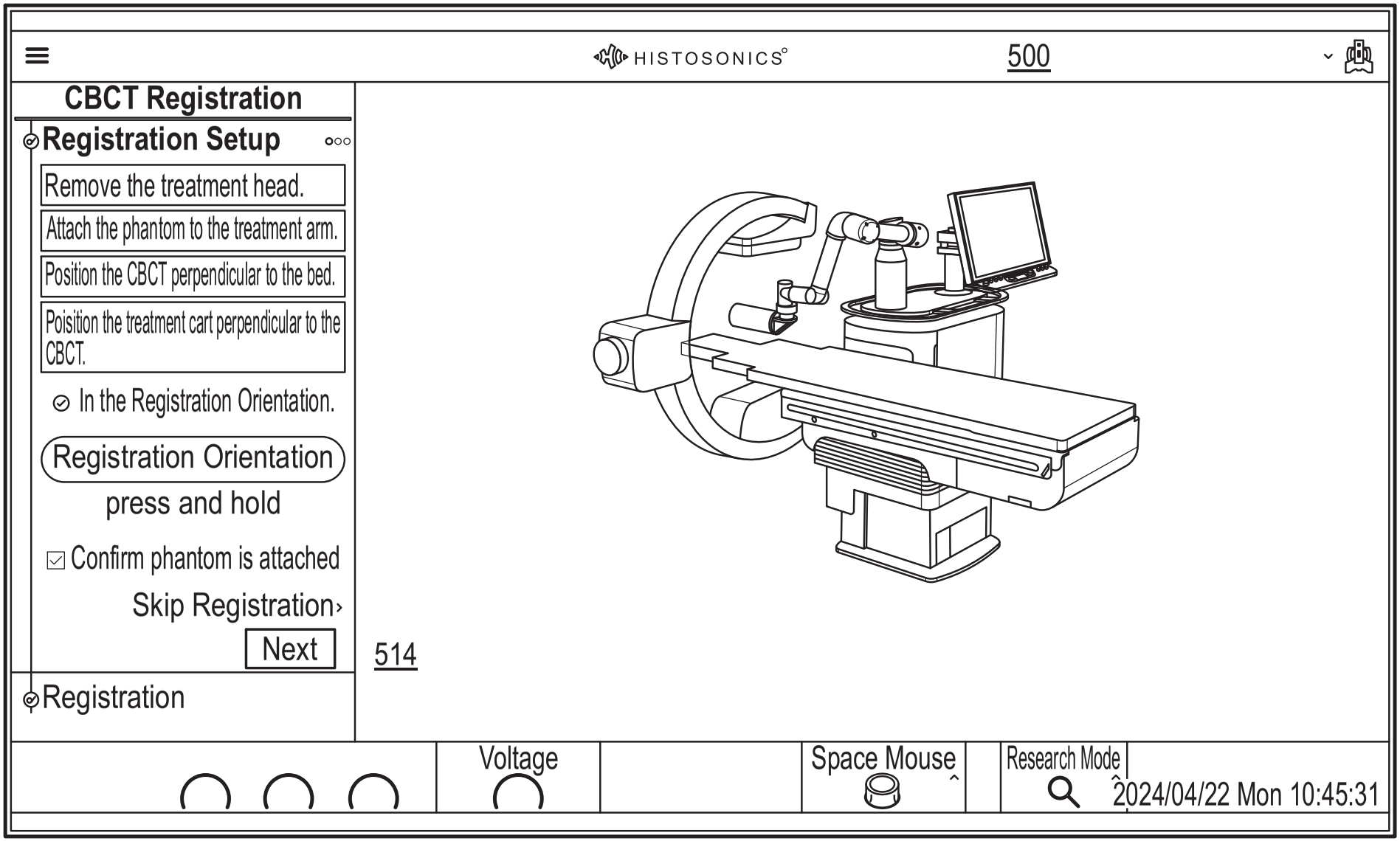
HISTOSONICS
500
CBCT Registration
Registration Setup
Remove the treatment head.
Attach the phantom to the treatment arm.
Position the CBCT perpendicular to the bed.
Poisition the treatment cart perpendicular to the CBCT.
In the Registration Orientation.
Registration Orientation
press and hold
Confirm phantom is attached
Skip Registration›
Next
514
Registration
Voltage
Space Mouse
Research Mode
2024/04/22 Mon 10:45:31

FIG. 9

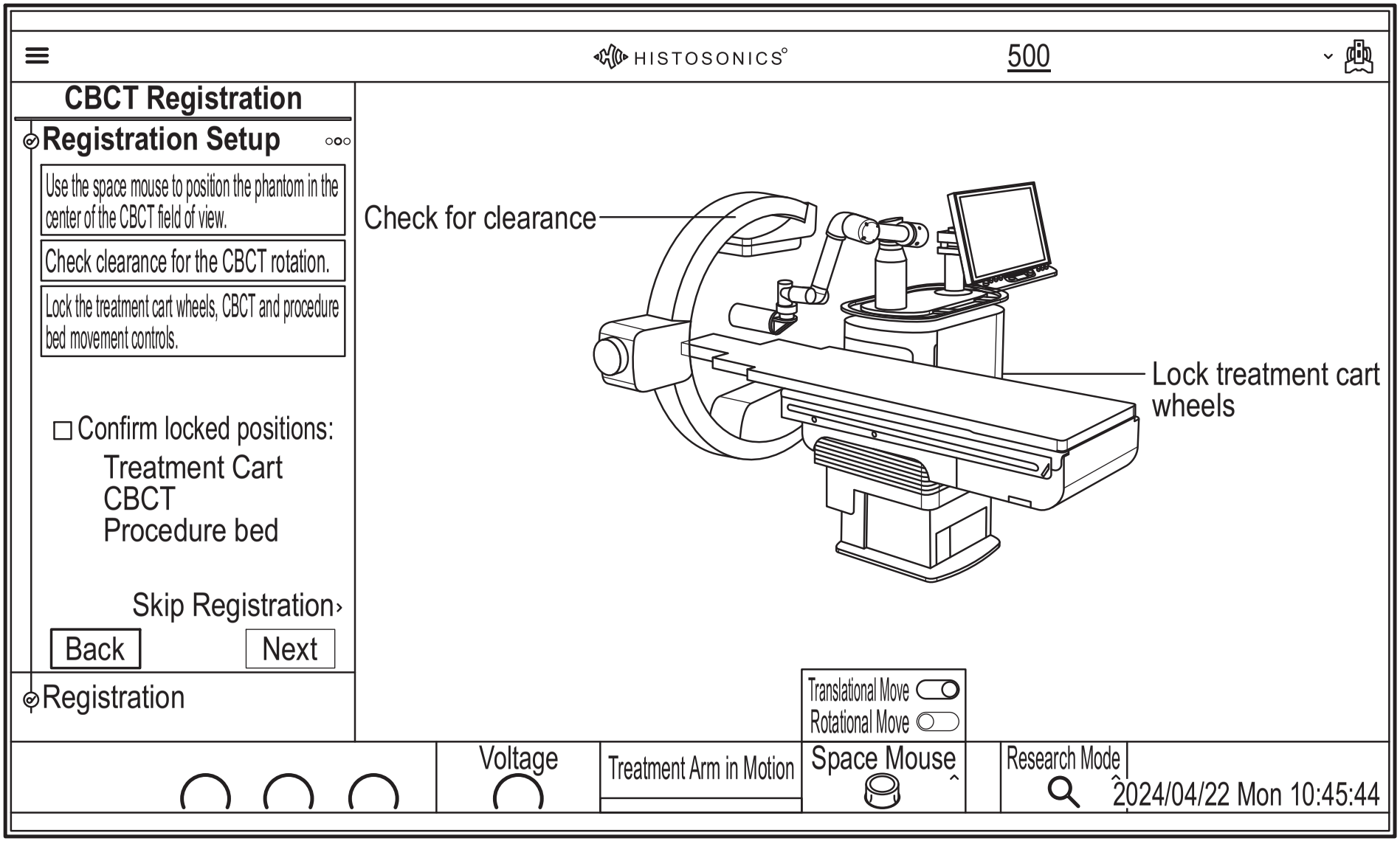
HISTOSONICS
500
CBCT Registration
Registration Setup
Use the space mouse to position the phantom in the center of the CBCT field of view.
Check clearance for the CBCT rotation.
Lock the treatment cart wheels, CBCT and procedure bed movement controls.
Confirm locked positions:
Treatment Cart
CBCT
Procedure bed
Skip Registration
Back
Next
Registration
Check for clearance
Lock treatment cart wheels
Translational Move
Rotational Move
Voltage
Treatment Arm in Motion
Space Mouse
Research Mode
2024/04/22 Mon 10:45:44

FIG. 10

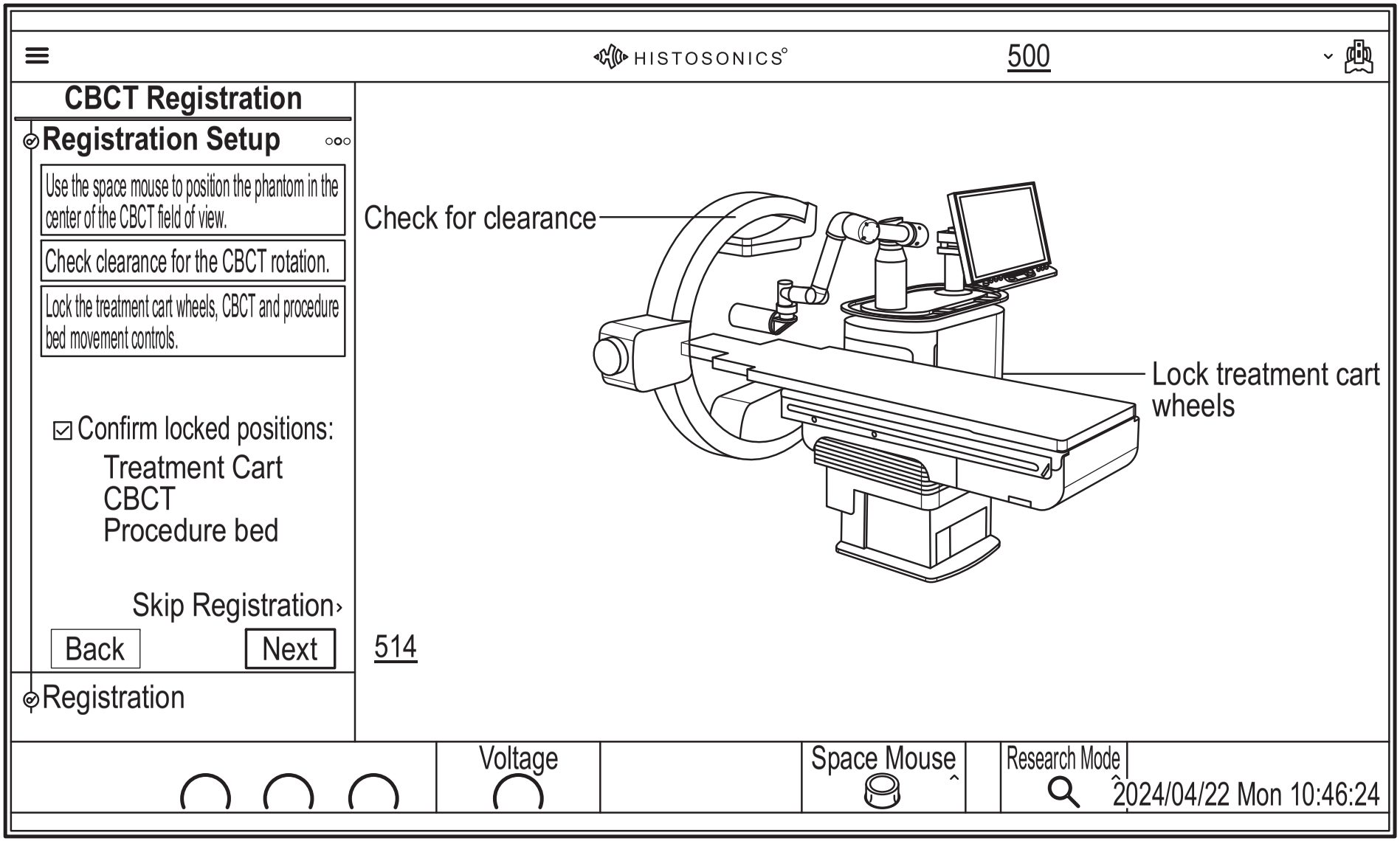
HISTOSONICS
500
CBCT Registration
Registration Setup
Use the space mouse to position the phantom in the center of the CBCT field of view.
Check clearance for the CBCT rotation.
Lock the treatment cart wheels, CBCT and procedure bed movement controls.
Confirm locked positions:
Treatment Cart
CBCT
Procedure bed
Skip Registration
Back
Next
514
Registration
Check for clearance
Lock treatment cart wheels
Voltage
Space Mouse
Research Mode
2024/04/22 Mon 10:46:24

FIG. 11

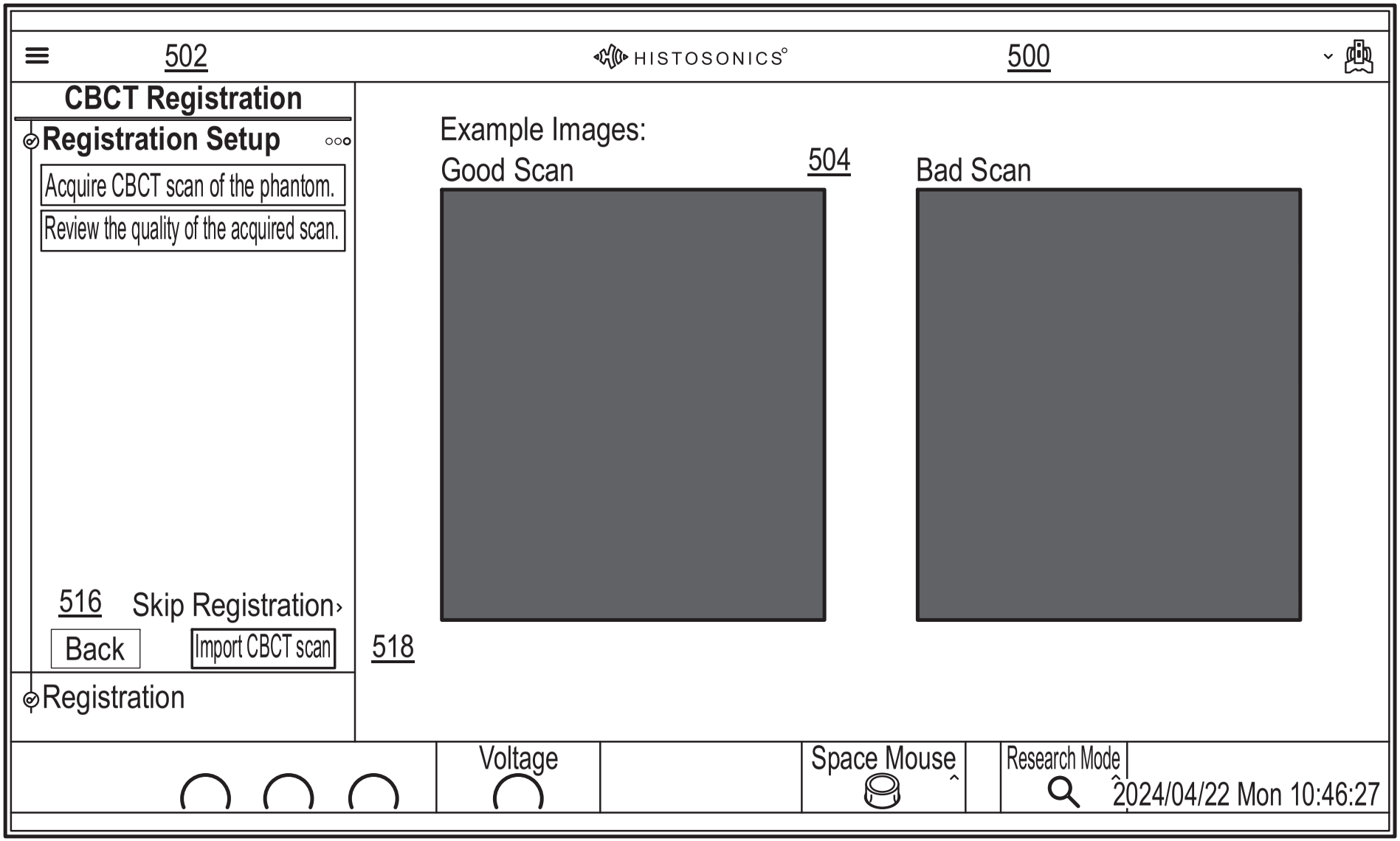
502
HISTOSONICS
500
CBCT Registration
Registration Setup
Acquire CBCT scan of the phantom.
Review the quality of the acquired scan.
Example Images:
Good Scan
504
Bad Scan
516
Skip Registration
Back
Import CBCT scan
518
Registration
Voltage
Space Mouse
Research Mode
2024/04/22 Mon 10:46:27

FIG. 12

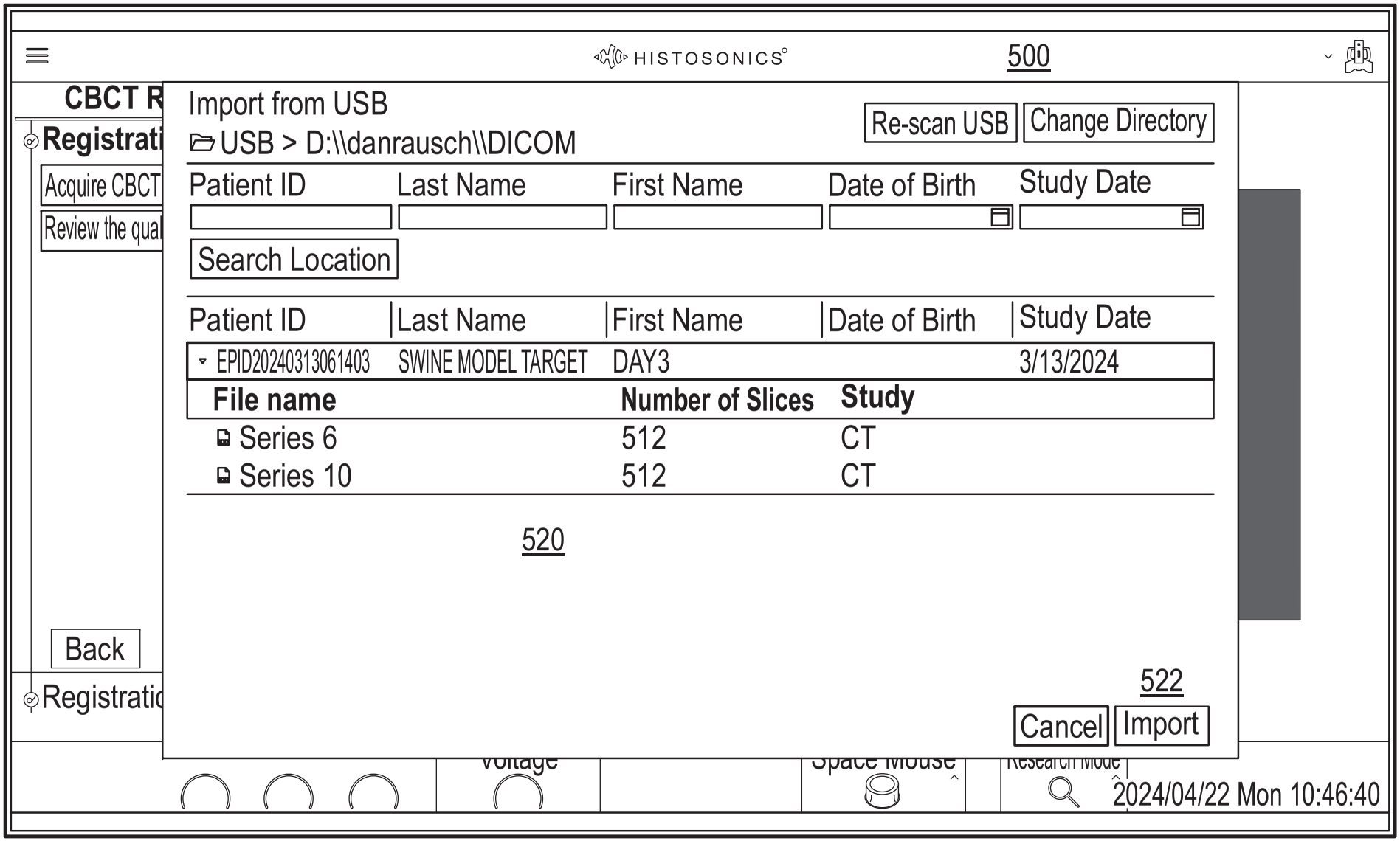
HISTOSONICS
500
CBCT R
Registrati
Acquire CBCT
Review the qual
Import from USB
USB > D:\\danrausch\\DICOM
Re-scan USB
Change Directory
Patient ID
Last Name
First Name
Date of Birth
Study Date
Search Location
Patient ID
Last Name
First Name
Date of Birth
Study Date
EPID20240313061403
SWINE MODEL TARGET
DAY3
3/13/2024
File name
Number of Slices
Study
Series 6
512
CT
Series 10
512
CT
520
Back
Registratic
522
Cancel
Import
Voltage
Space Mouse
Research Mode
2024/04/22 Mon 10:46:40

FIG. 13

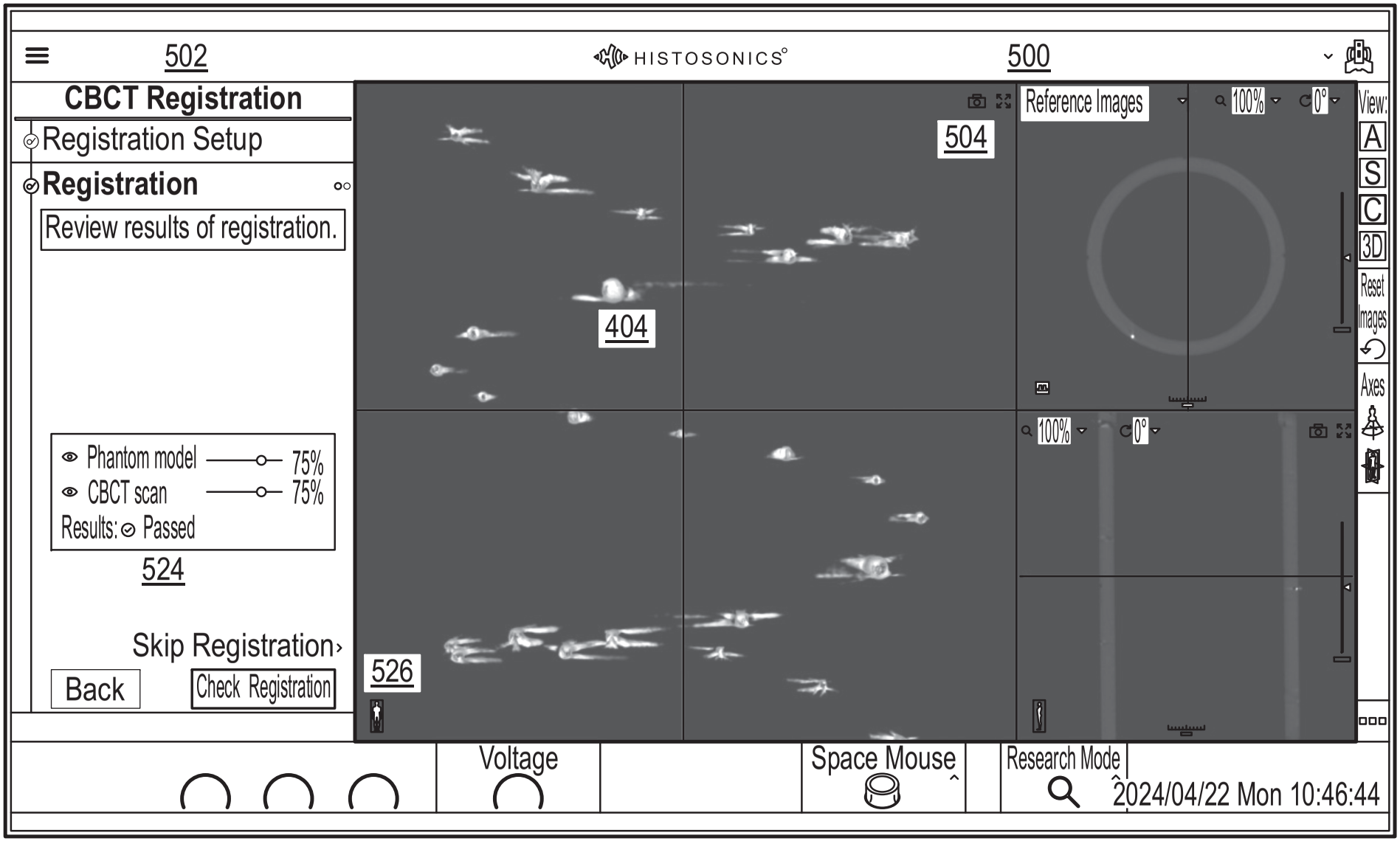
502
HISTOSONICS
500
CBCT Registration
Registration Setup
Registration
Review results of registration.
Phantom model 75%
CBCT scan 75%
Results: Passed
524
Skip Registration
Back
Check Registration
404
504
526
Reference Images
100%
0°
View:
A
S
C
3D
Reset Images
Axes
Voltage
Space Mouse
Research Mode
2024/04/22 Mon 10:46:44

FIG. 14


502
HISTOSONICS
500
CBCT Registration
Registration Setup
Registration
Review results of registration.
Phantom model 75%
CBCT scan 75%
Results: Failed
524
516 Skip Registration
Back
Check Registration
Reference Images
100%
0°
View:
A
S
C
3D
Reset Images
Axes
Voltage
Space Mouse
Research Mode
2024/04/22 Mon 10:47:27

FIG. 15

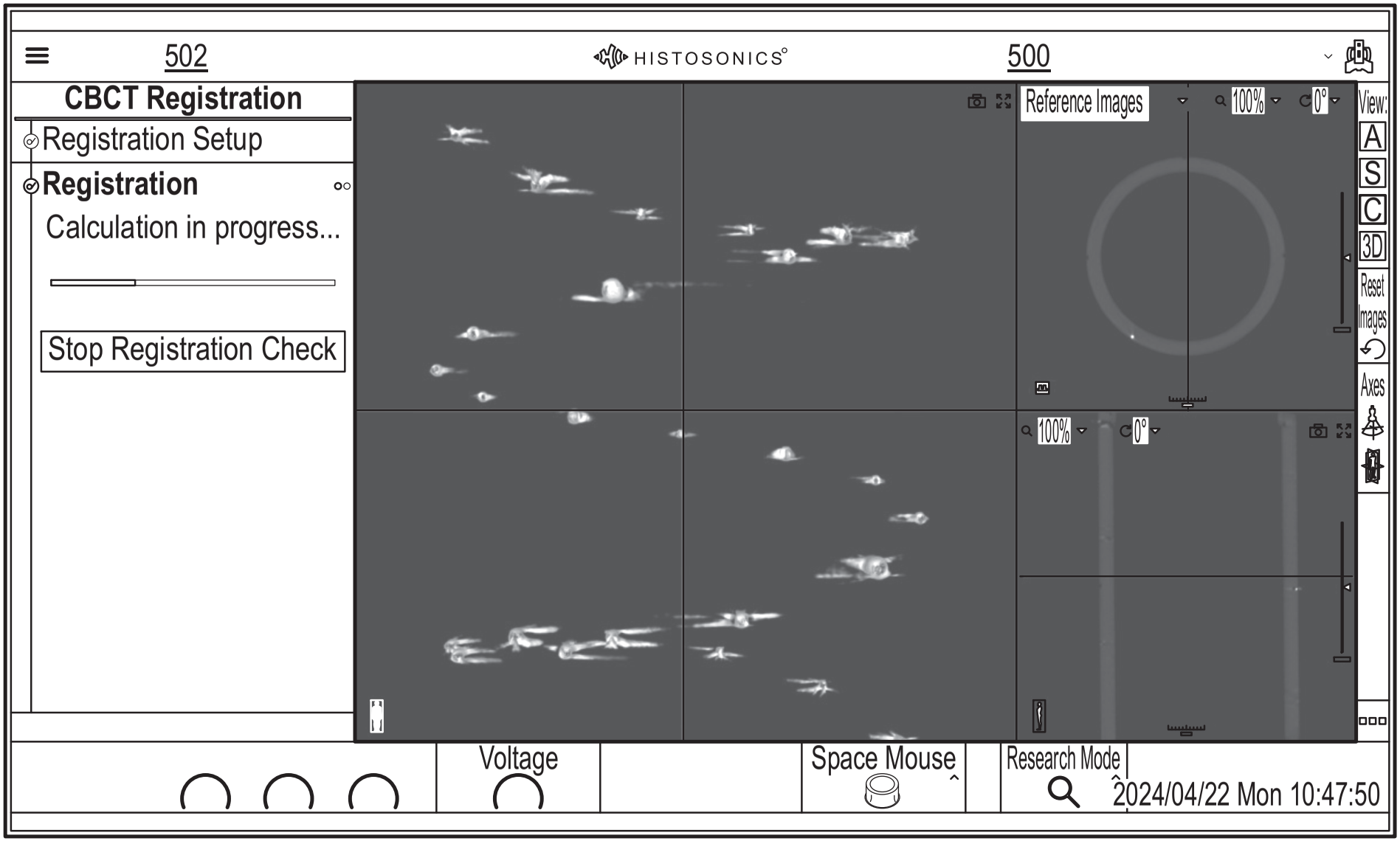
502
HISTOSONICS
500
CBCT Registration
Registration Setup
Registration
Calculation in progress...
Stop Registration Check
Reference Images
100%
0°
View:
A
S
C
3D
Reset Images
Axes
100%
0°
Voltage
Space Mouse
Research Mode
2024/04/22 Mon 10:47:50

FIG. 16

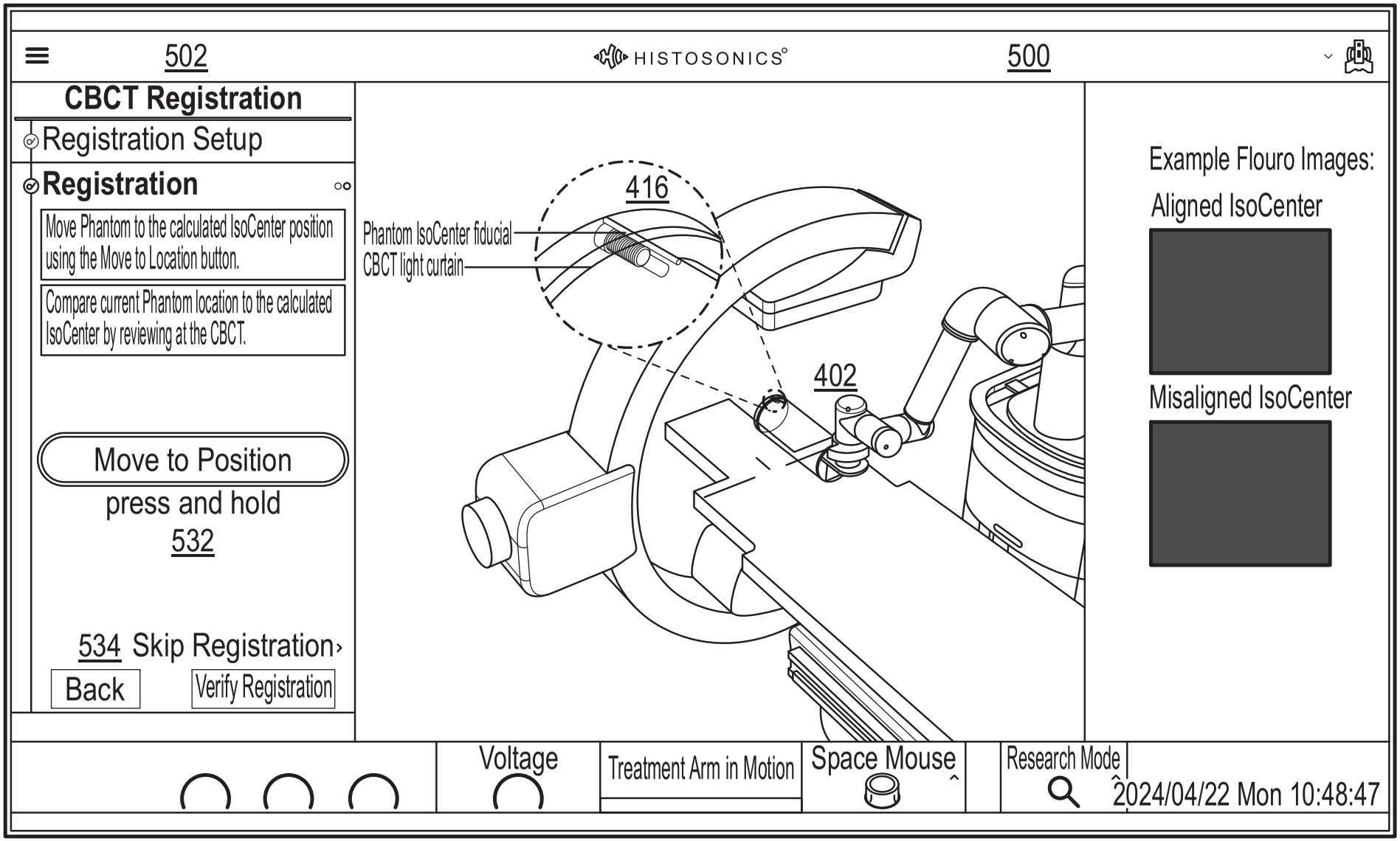
502
HISTOSONICS
500
CBCT Registration
Registration Setup
Registration
Move Phantom to the calculated IsoCenter position using the Move to Location button.
Compare current Phantom location to the calculated IsoCenter by reviewing at the CBCT.
Move to Position
press and hold
532
534 Skip Registration
Back
Verify Registration
416
Phantom IsoCenter fiducial
CBCT light curtain
402
Example Flouro Images:
Aligned IsoCenter
Misaligned IsoCenter
Voltage
Treatment Arm in Motion
Space Mouse
Research Mode
2024/04/22 Mon 10:48:47

FIG. 17

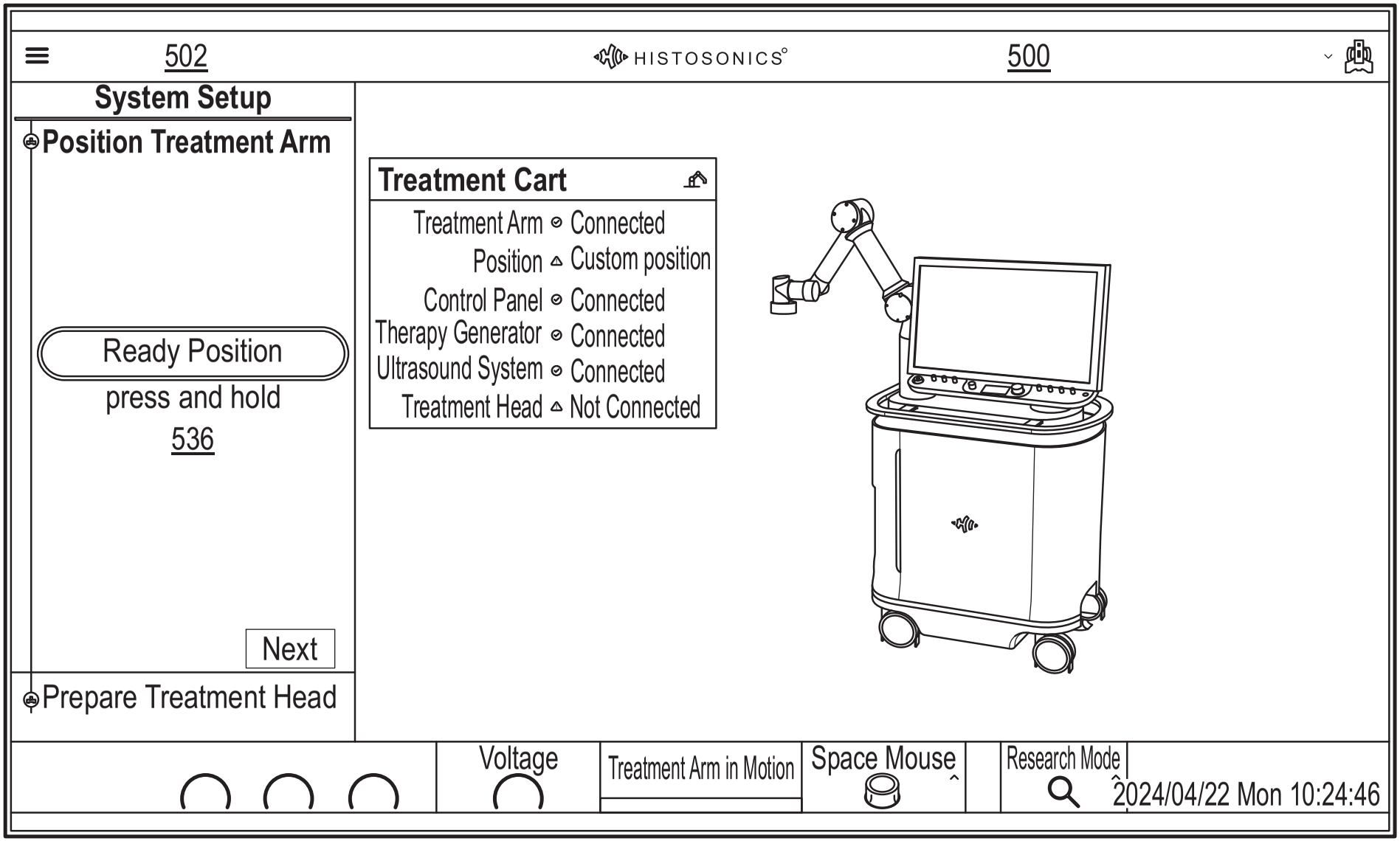
502
HISTOSONICS
500
System Setup
Position Treatment Arm
Ready Position
press and hold
536
Next
Prepare Treatment Head
Treatment Cart
Treatment Arm Connected
Position Custom position
Control Panel Connected
Therapy Generator Connected
Ultrasound System Connected
Treatment Head Not Connected
Voltage
Treatment Arm in Motion
Space Mouse
Research Mode
2024/04/22 Mon 10:24:46

FIG. 18

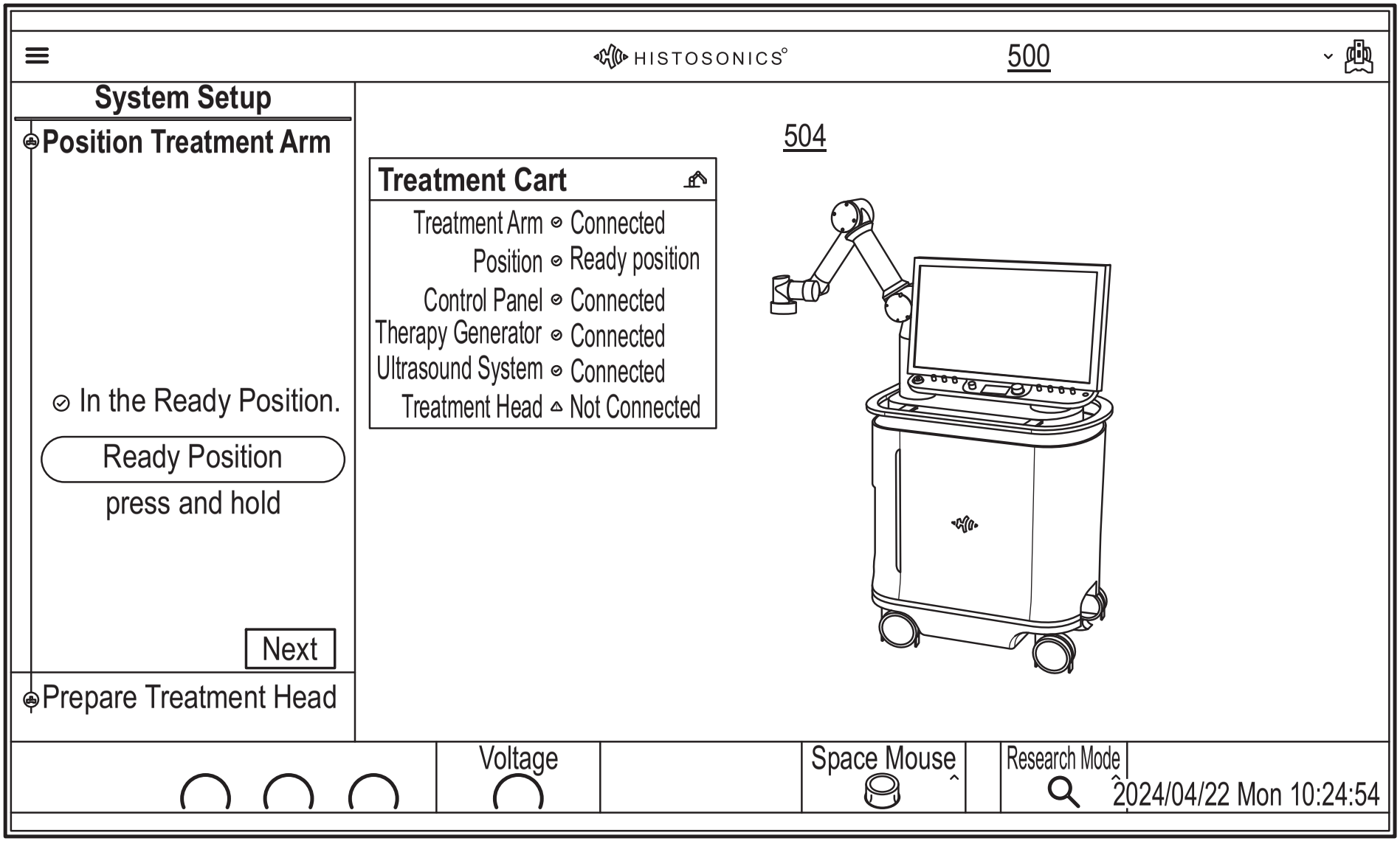
HISTOSONICS
500
System Setup
Position Treatment Arm
In the Ready Position.
Ready Position
press and hold
Next
Prepare Treatment Head
504
Treatment Cart
Treatment Arm Connected
Position Ready position
Control Panel Connected
Therapy Generator Connected
Ultrasound System Connected
Treatment Head Not Connected
Voltage
Space Mouse
Research Mode
2024/04/22 Mon 10:24:54

FIG. 19

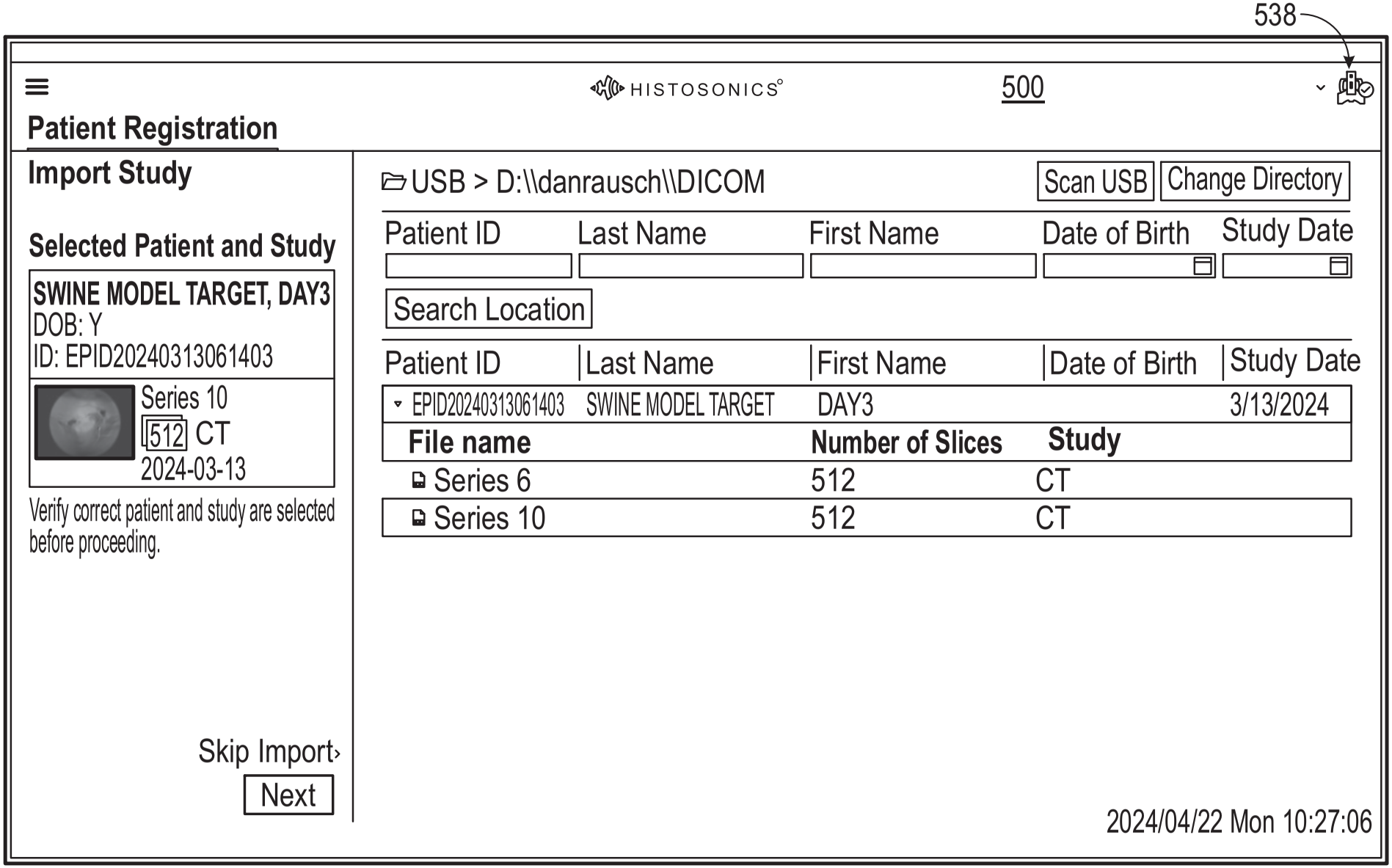
538
HISTOSONICS
500
Patient Registration
Import Study
Selected Patient and Study
SWINE MODEL TARGET, DAY3
DOB: Y
ID: EPID20240313061403
Series 10
512 CT
2024-03-13
Verify correct patient and study are selected before proceeding.
Skip Import›
Next
USB > D:\\danrausch\\DICOM
Scan USB
Change Directory
Patient ID
Last Name
First Name
Date of Birth
Study Date
Search Location
Patient ID
Last Name
First Name
Date of Birth
Study Date
EPID20240313061403
SWINE MODEL TARGET
DAY3
3/13/2024
File name
Number of Slices
Study
Series 6
512
CT
Series 10
512
CT
2024/04/22 Mon 10:27:06

FIG. 20

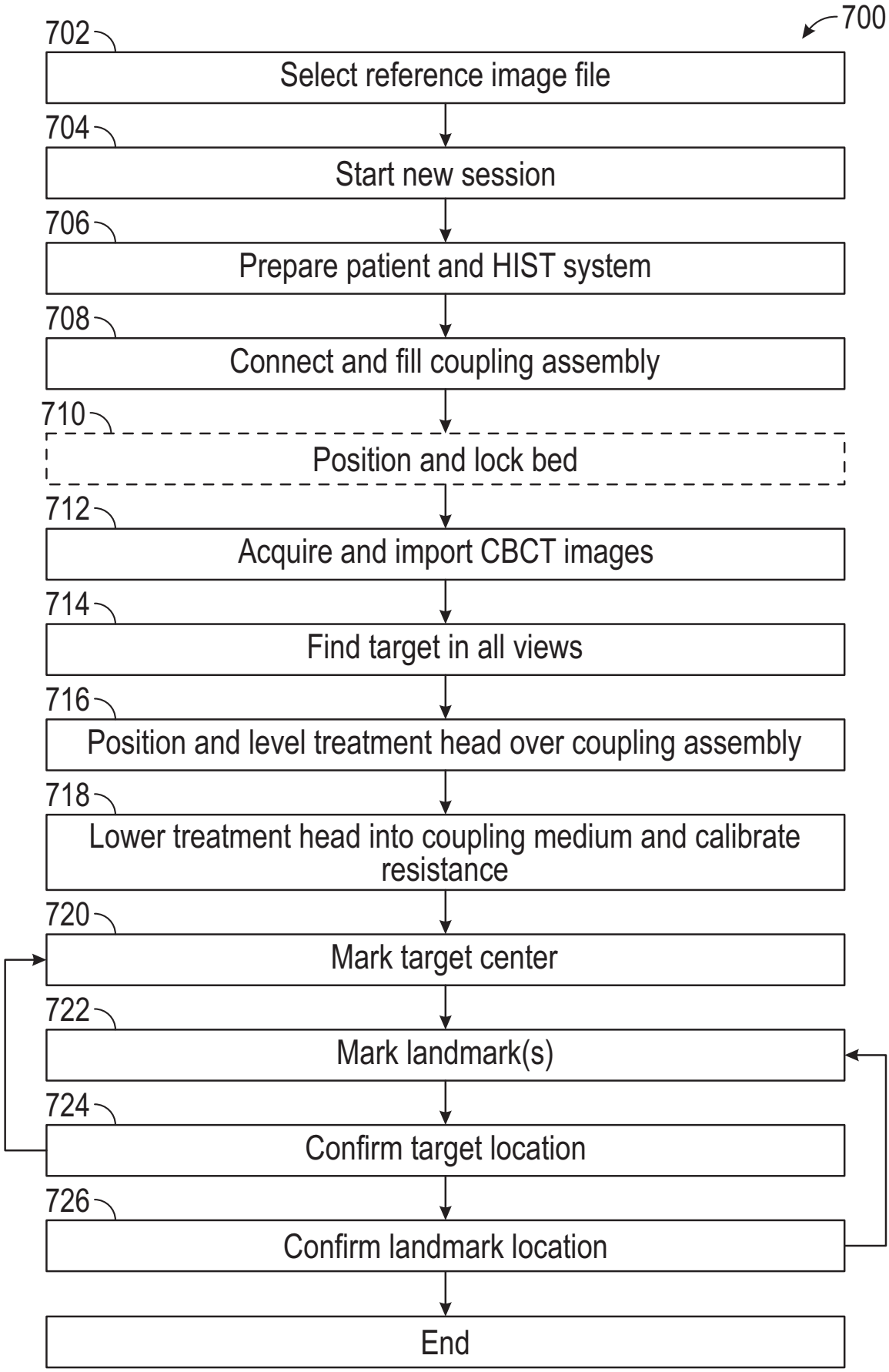
700
702
Select reference image file
704
Start new session
706
Prepare patient and HIST system
708
Connect and fill coupling assembly
710
Position and lock bed
712
Acquire and import CBCT images
714
Find target in all views
716
Position and level treatment head over coupling assembly
718
Lower treatment head into coupling medium and calibrate resistance
720
Mark target center
722
Mark landmark(s)
724
Confirm target location
726
Confirm landmark location
End

FIG. 21

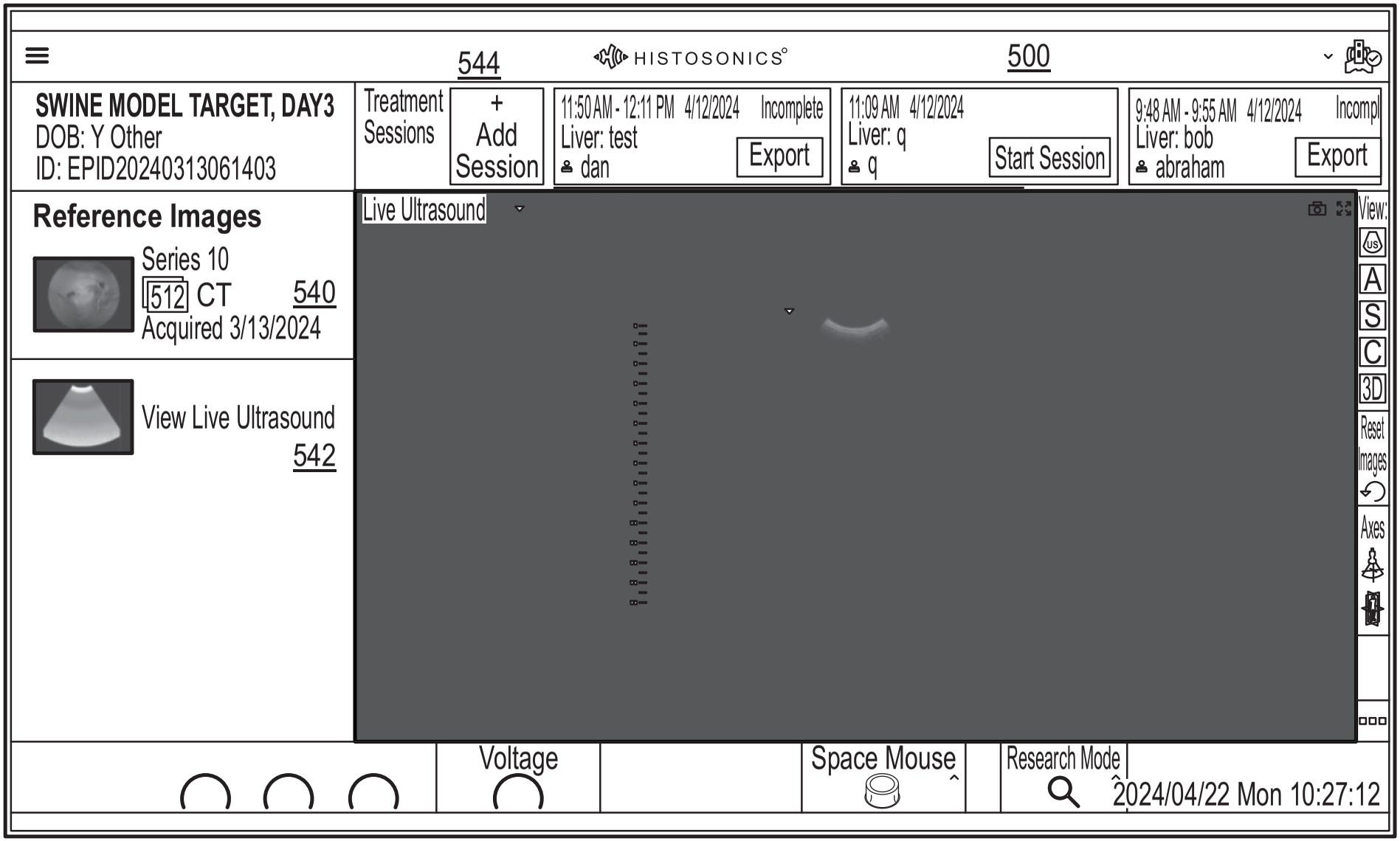
544
HISTOSONICS
500
SWINE MODEL TARGET, DAY3
DOB: Y Other
ID: EPID20240313061403
Treatment Sessions
+ Add Session
11:50 AM - 12:11 PM 4/12/2024 Incomplete
Liver: test
dan
Export
11:09 AM 4/12/2024
Liver: q
q
Start Session
9:48 AM - 9:55 AM 4/12/2024 Incompl
Liver: bob
abraham
Export
Reference Images
Series 10
512 CT 540
Acquired 3/13/2024
View Live Ultrasound
542
Live Ultrasound
View:
US
A
S
C
3D
Reset Images
Axes
Voltage
Space Mouse
Research Mode
2024/04/22 Mon 10:27:12

FIG. 22

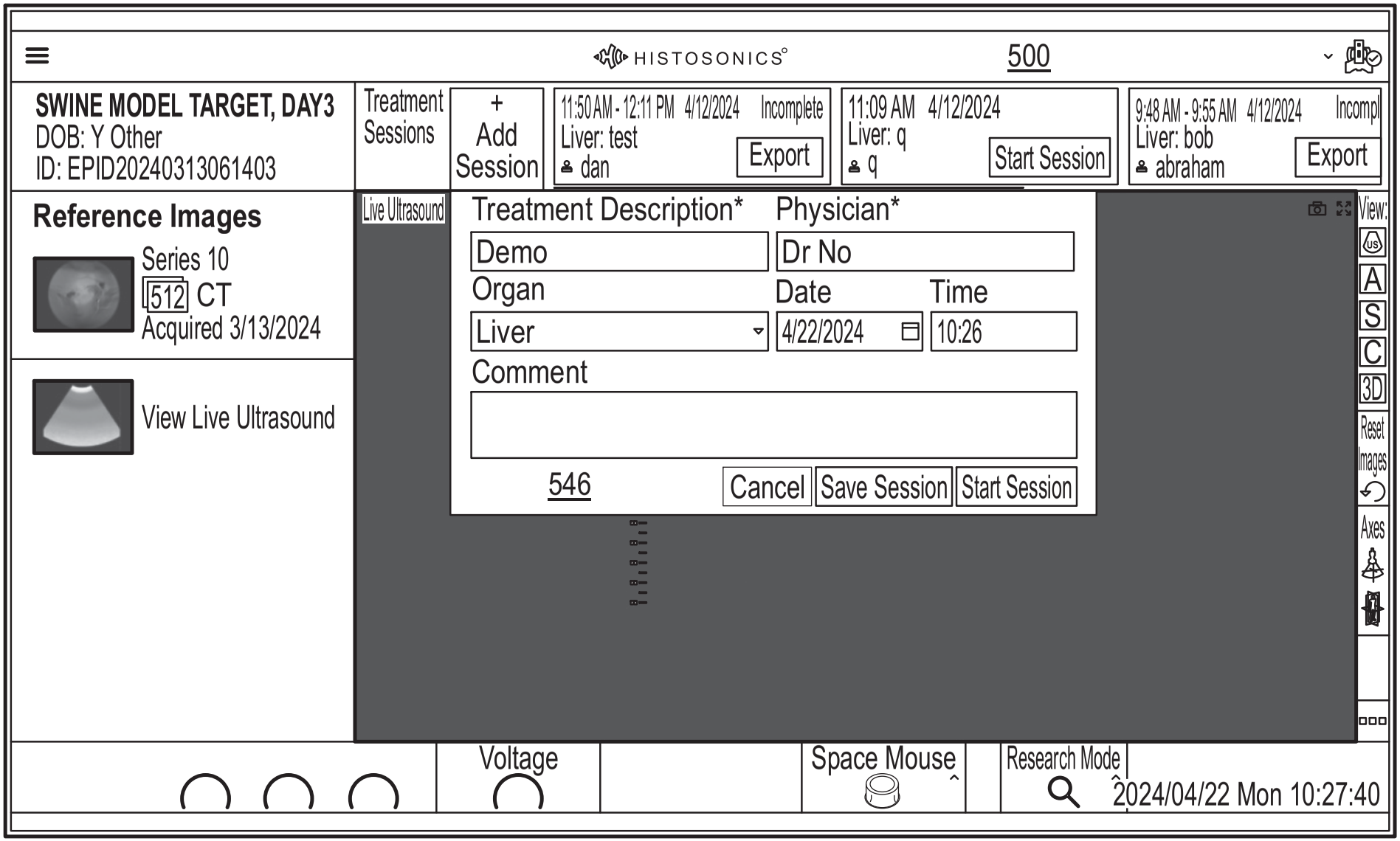
HISTOSONICS
500
SWINE MODEL TARGET, DAY3
DOB: Y Other
ID: EPID20240313061403
Treatment Sessions
+ Add Session
11:50 AM - 12:11 PM 4/12/2024 Incomplete
Liver: test
dan
Export
11:09 AM 4/12/2024
Liver: q
q
Start Session
9:48 AM - 9:55 AM 4/12/2024 Incompl
Liver: bob
abraham
Export
Reference Images
Series 10
512 CT
Acquired 3/13/2024
View Live Ultrasound
Live Ultrasound
Treatment Description*
Physician*
Demo
Dr No
Organ
Date
Time
Liver
4/22/2024
10:26
Comment
546
Cancel
Save Session
Start Session
View:
US
A
S
C
3D
Reset Images
Axes
Voltage
Space Mouse
Research Mode
2024/04/22 Mon 10:27:40

FIG. 23

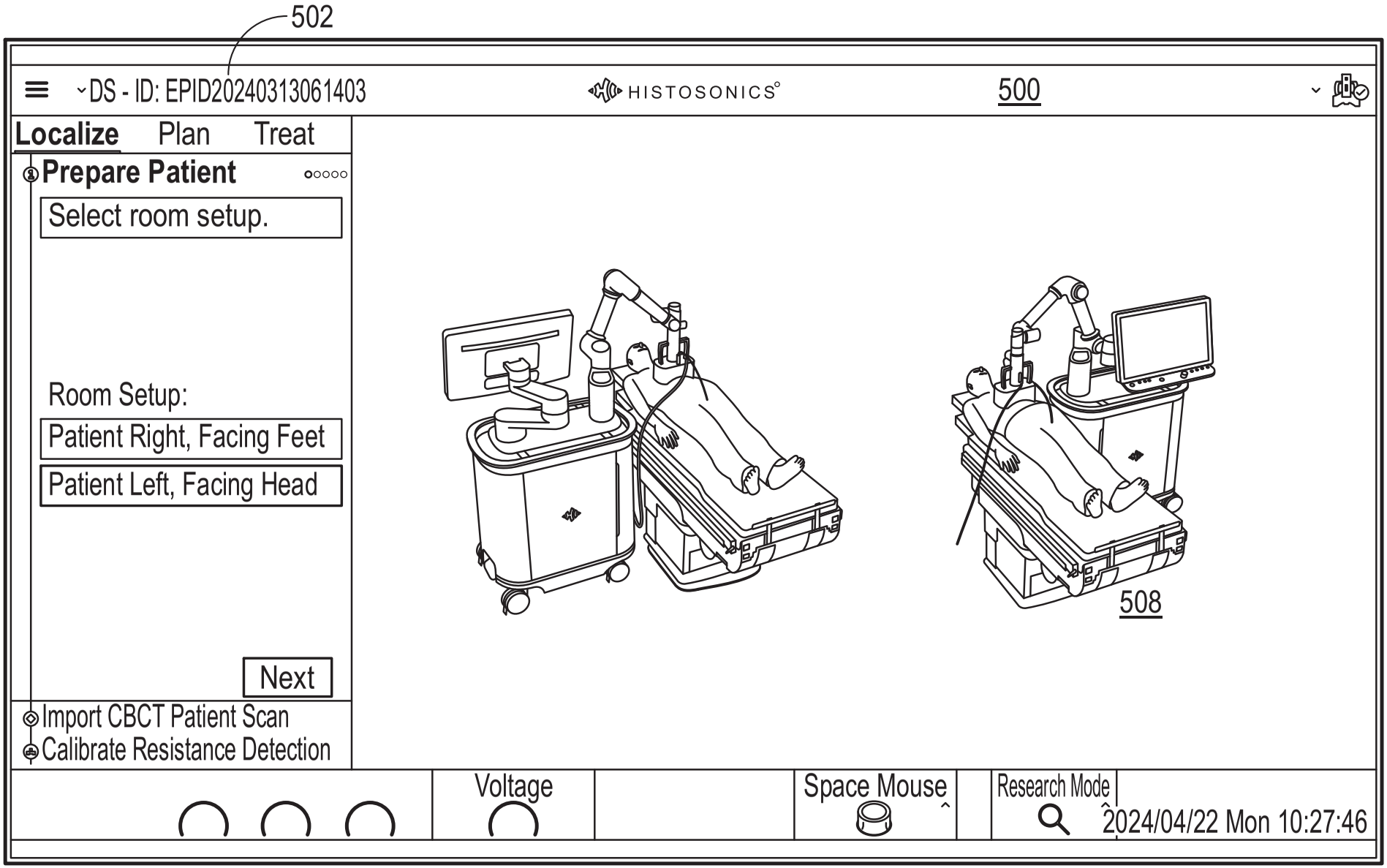
502
DS - ID: EPID20240313061403
HISTOSONICS
500
Localize
Plan
Treat
Prepare Patient
Select room setup.
Room Setup:
Patient Right, Facing Feet
Patient Left, Facing Head
Next
Import CBCT Patient Scan
Calibrate Resistance Detection
508
Voltage
Space Mouse
Research Mode
2024/04/22 Mon 10:27:46

FIG. 24

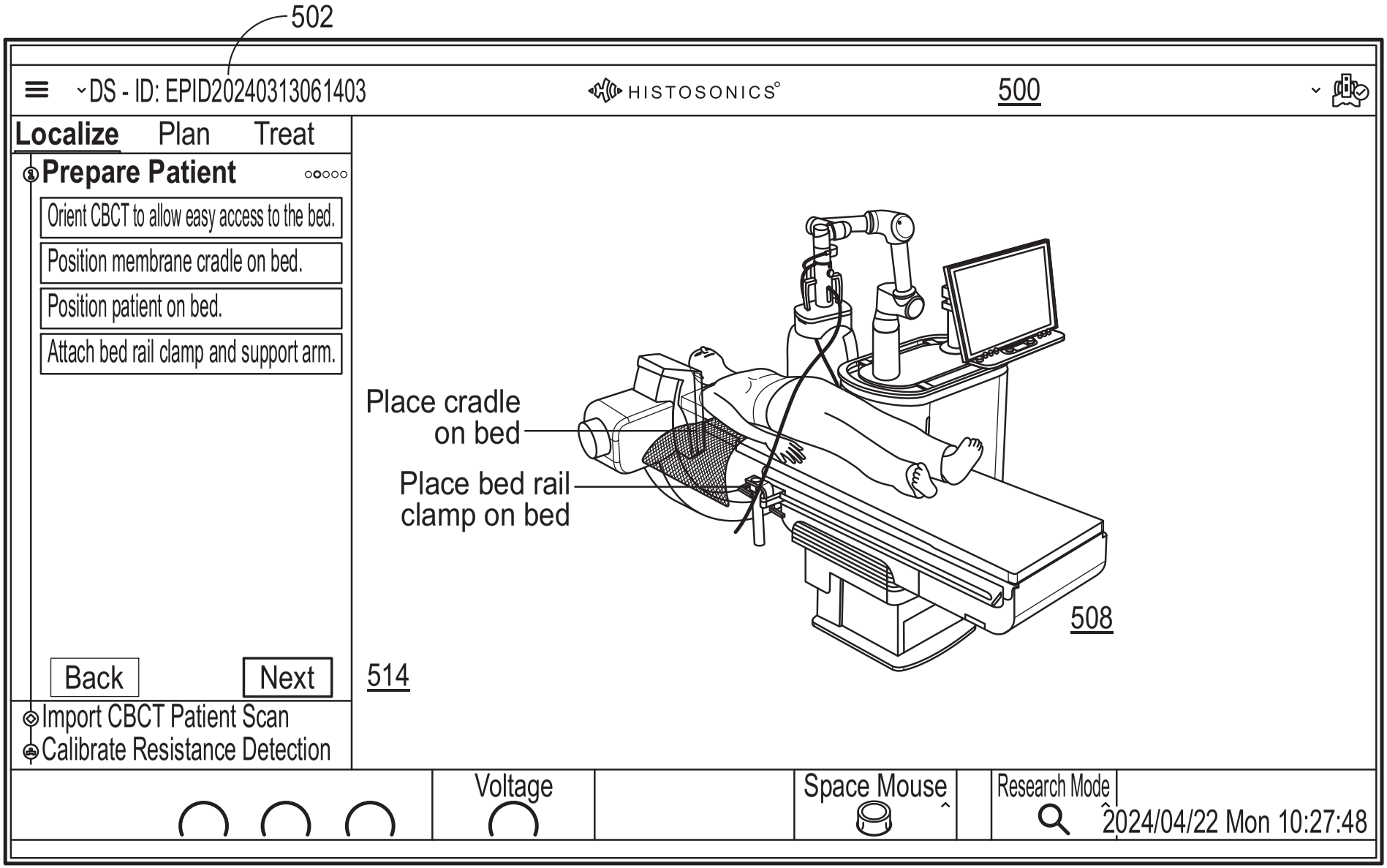
502
DS - ID: EPID20240313061403
HISTOSONICS
500
Localize
Plan
Treat
Prepare Patient
Orient CBCT to allow easy access to the bed.
Position membrane cradle on bed.
Position patient on bed.
Attach bed rail clamp and support arm.
Place cradle on bed
Place bed rail clamp on bed
508
Back
Next
514
Import CBCT Patient Scan
Calibrate Resistance Detection
Voltage
Space Mouse
Research Mode
2024/04/22 Mon 10:27:48

FIG. 25

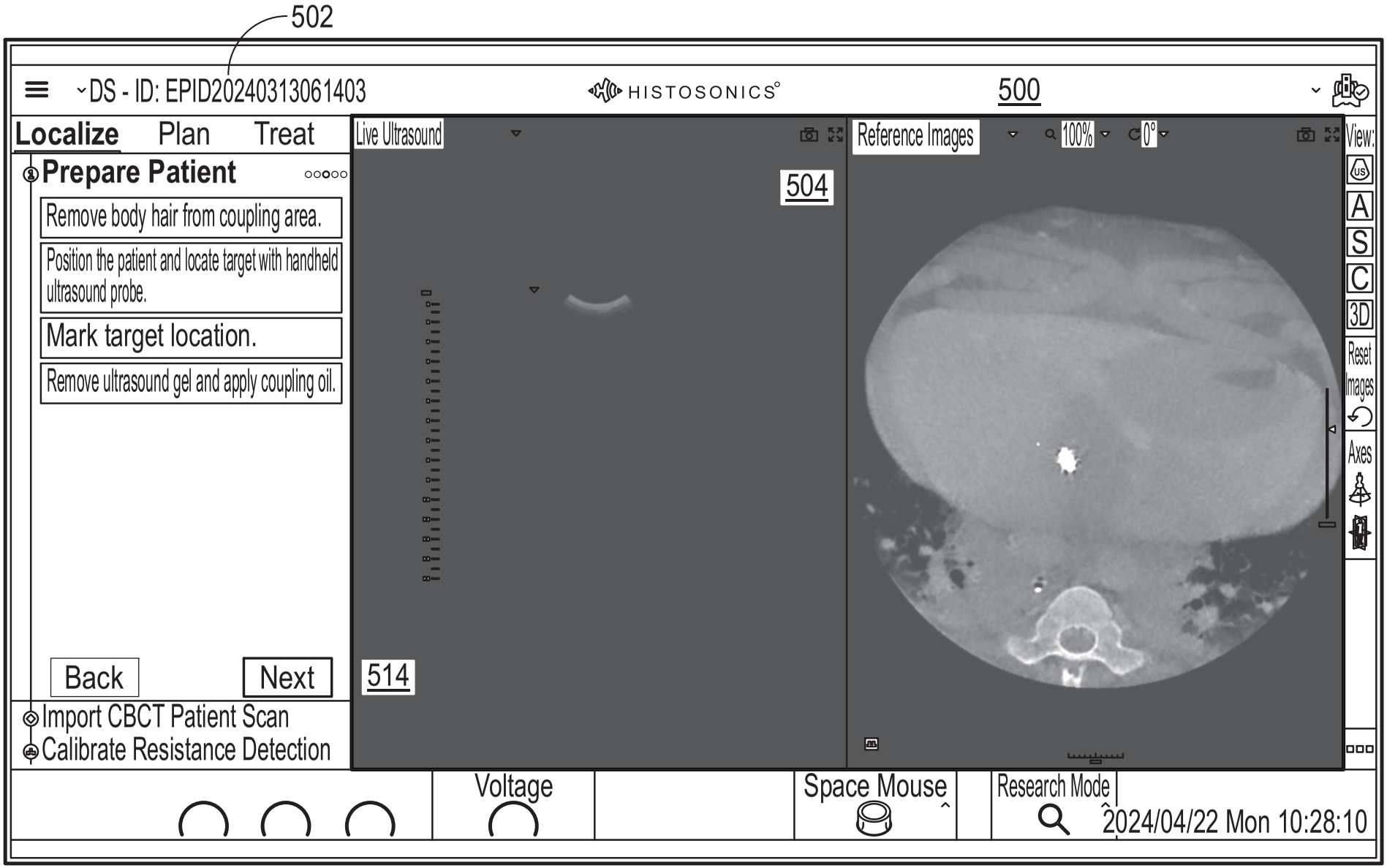
502
DS - ID: EPID20240313061403
HISTOSONICS
500
Localize
Plan
Treat
Prepare Patient
Remove body hair from coupling area.
Position the patient and locate target with handheld ultrasound probe.
Mark target location.
Remove ultrasound gel and apply coupling oil.
Back
Next
Import CBCT Patient Scan
Calibrate Resistance Detection
Live Ultrasound
504
514
Reference Images
100%
0°
View:
US
A
S
C
3D
Reset Images
Axes
Voltage
Space Mouse
Research Mode
2024/04/22 Mon 10:28:10

FIG. 26

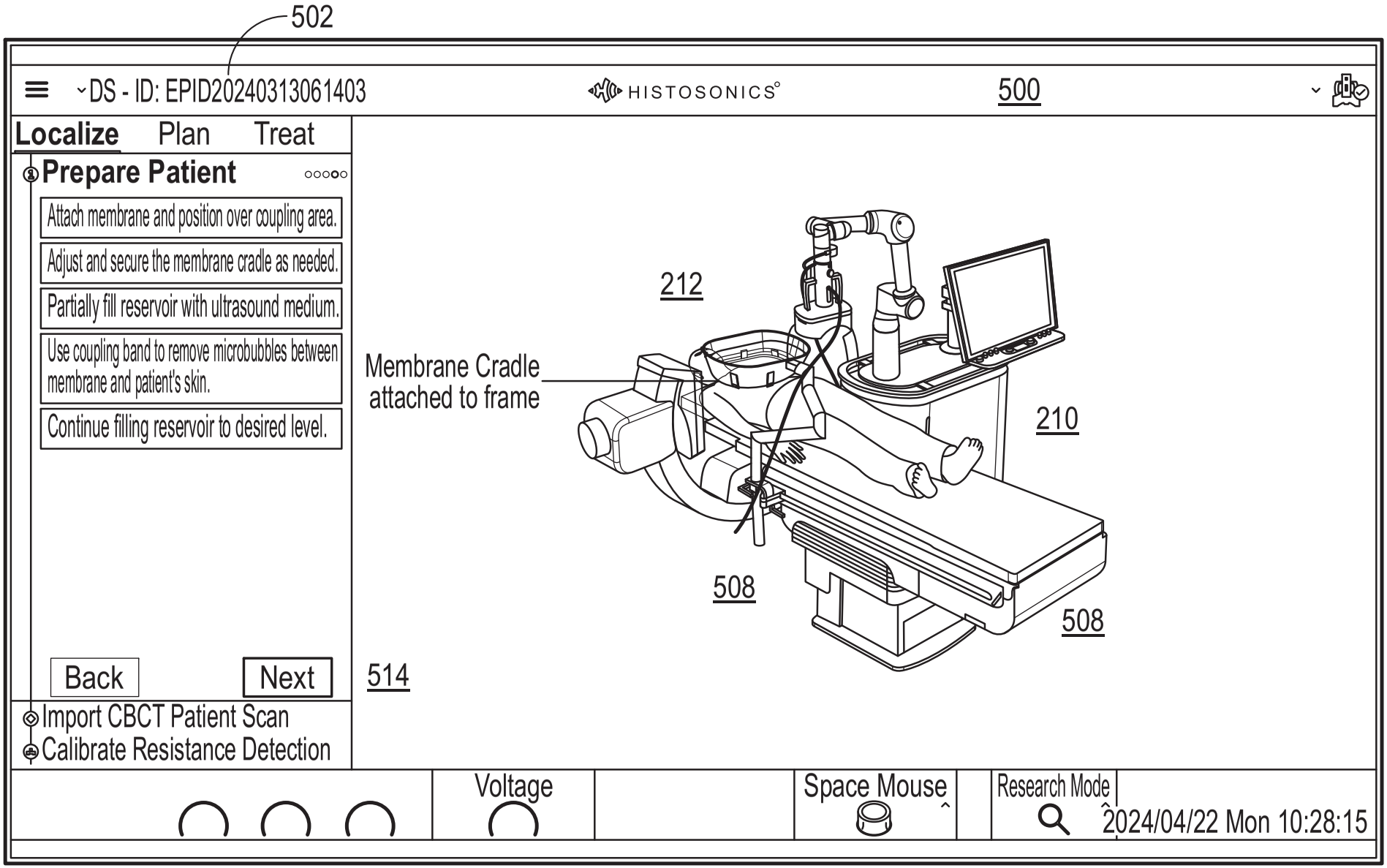
502
DS - ID: EPID20240313061403
HISTOSONICS
500
Localize
Plan
Treat
Prepare Patient
Attach membrane and position over coupling area.
Adjust and secure the membrane cradle as needed.
Partially fill reservoir with ultrasound medium.
Use coupling band to remove microbubbles between membrane and patient's skin.
Continue filling reservoir to desired level.
Back
Next
514
Import CBCT Patient Scan
Calibrate Resistance Detection
212
Membrane Cradle attached to frame
210
508
508
Voltage
Space Mouse
Research Mode
2024/04/22 Mon 10:28:15

FIG. 27

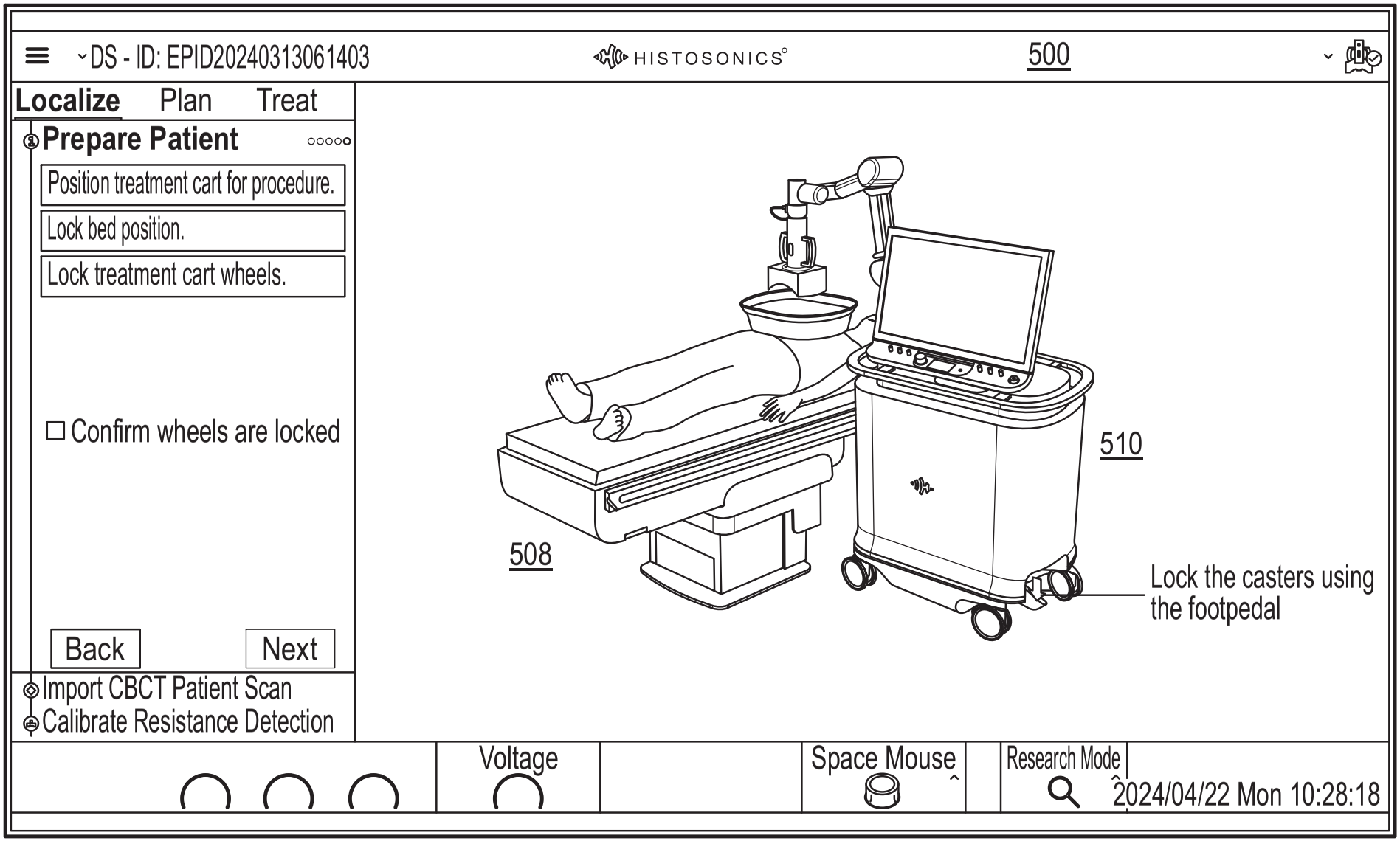
DS - ID: EPID20240313061403
HISTOSONICS
500
Localize
Plan
Treat
Prepare Patient
Position treatment cart for procedure.
Lock bed position.
Lock treatment cart wheels.
Confirm wheels are locked
Back
Next
Import CBCT Patient Scan
Calibrate Resistance Detection
510
508
Lock the casters using the footpedal
Voltage
Space Mouse
Research Mode
2024/04/22 Mon 10:28:18

FIG. 28

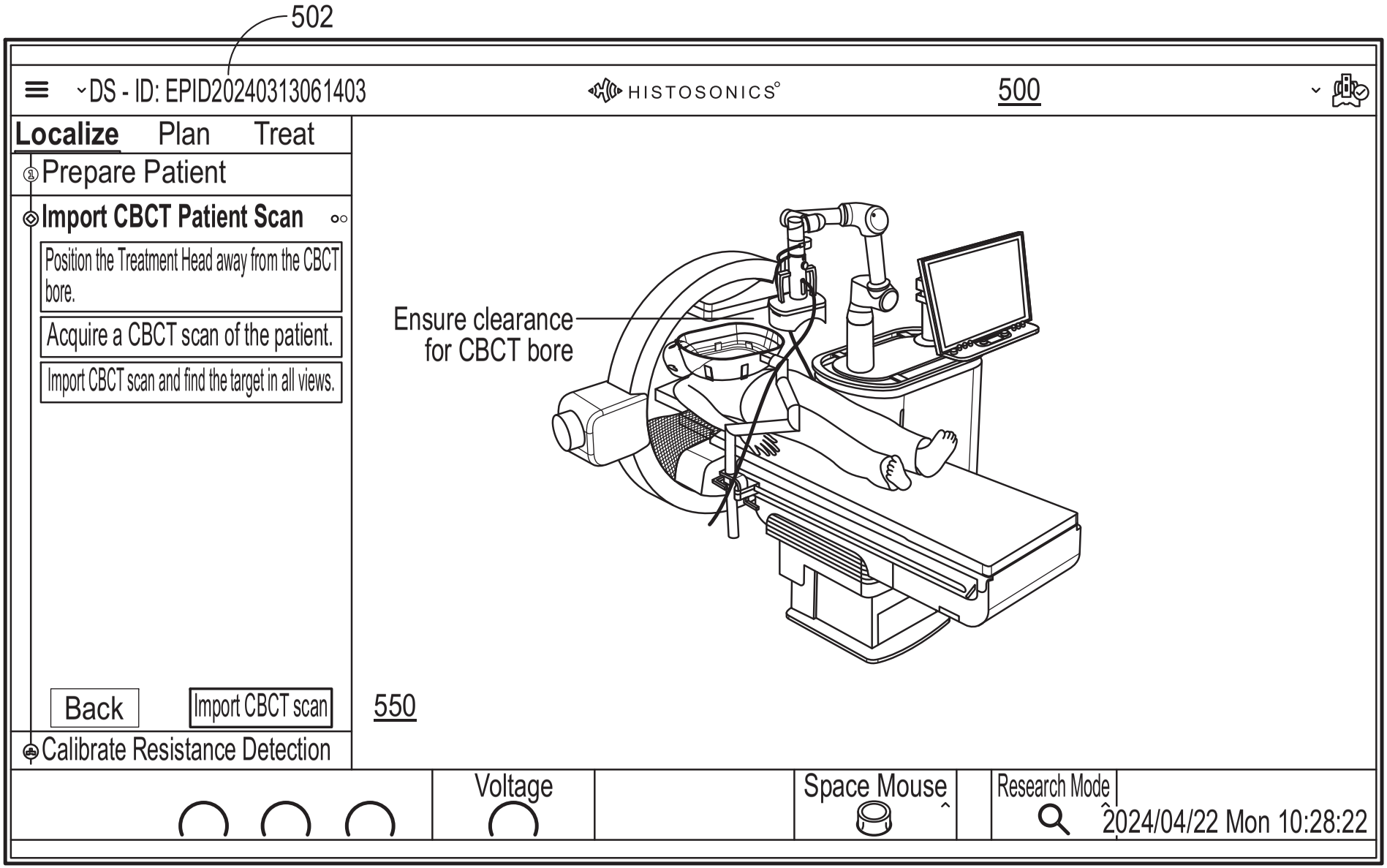
502
DS - ID: EPID20240313061403
HISTOSONICS
500
Localize
Plan
Treat
Prepare Patient
Import CBCT Patient Scan
Position the Treatment Head away from the CBCT bore.
Acquire a CBCT scan of the patient.
Import CBCT scan and find the target in all views.
Ensure clearance for CBCT bore
Back
Import CBCT scan
550
Calibrate Resistance Detection
Voltage
Space Mouse
Research Mode
2024/04/22 Mon 10:28:22

FIG. 29

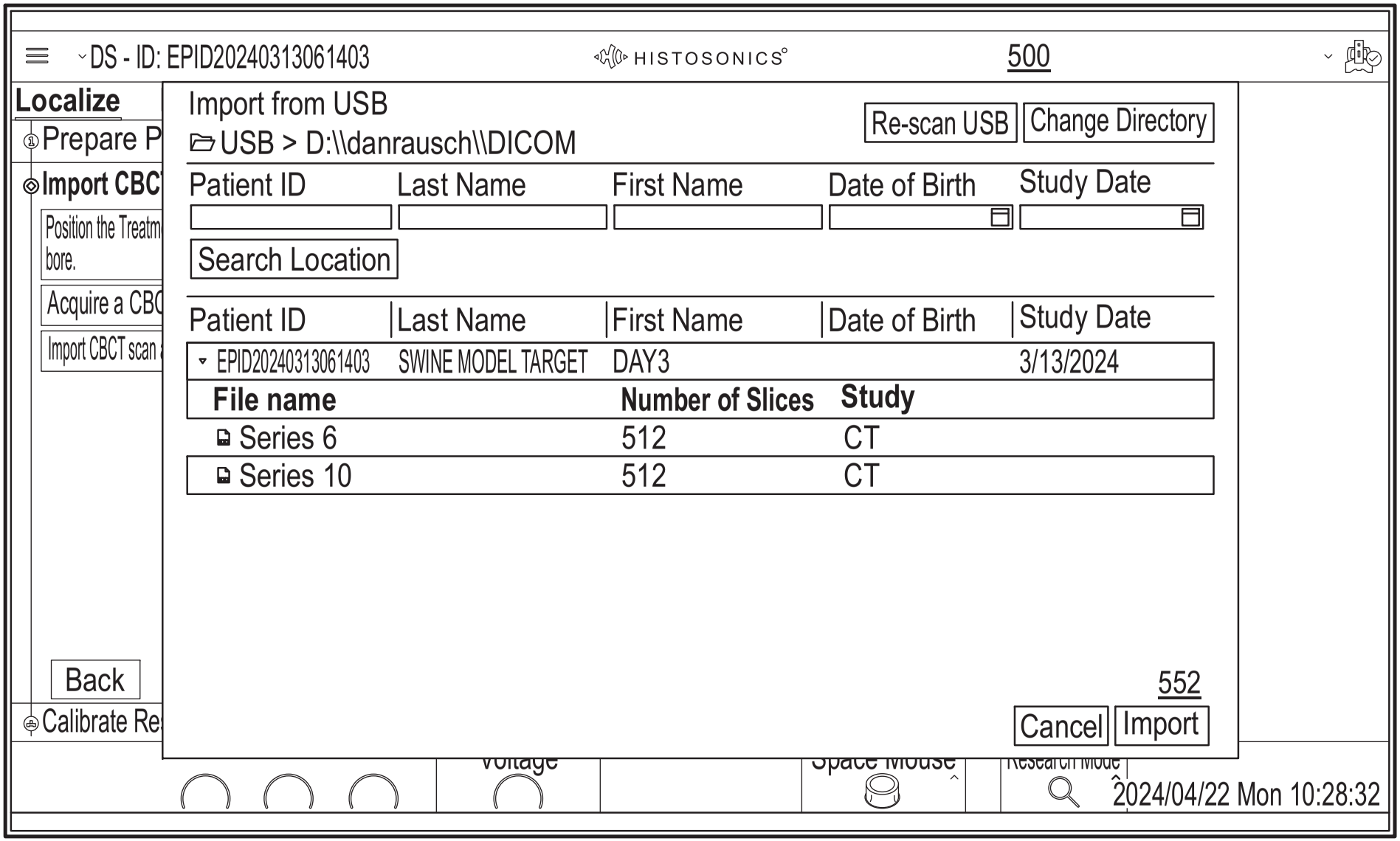
DS - ID: EPID20240313061403
HISTOSONICS
500
Localize
Prepare P
Import CBC
Position the Treatm bore.
Acquire a CBC
Import CBCT scan
Import from USB
USB > D:\\danrausch\\DICOM
Re-scan USB
Change Directory
Patient ID
Last Name
First Name
Date of Birth
Study Date
Search Location
Patient ID
Last Name
First Name
Date of Birth
Study Date
EPID20240313061403
SWINE MODEL TARGET
DAY3
3/13/2024
File name
Number of Slices
Study
Series 6
512
CT
Series 10
512
CT
552
Cancel
Import
Back
Calibrate Re
Voltage
Space Mouse
Research Mode
2024/04/22 Mon 10:28:32

FIG. 30

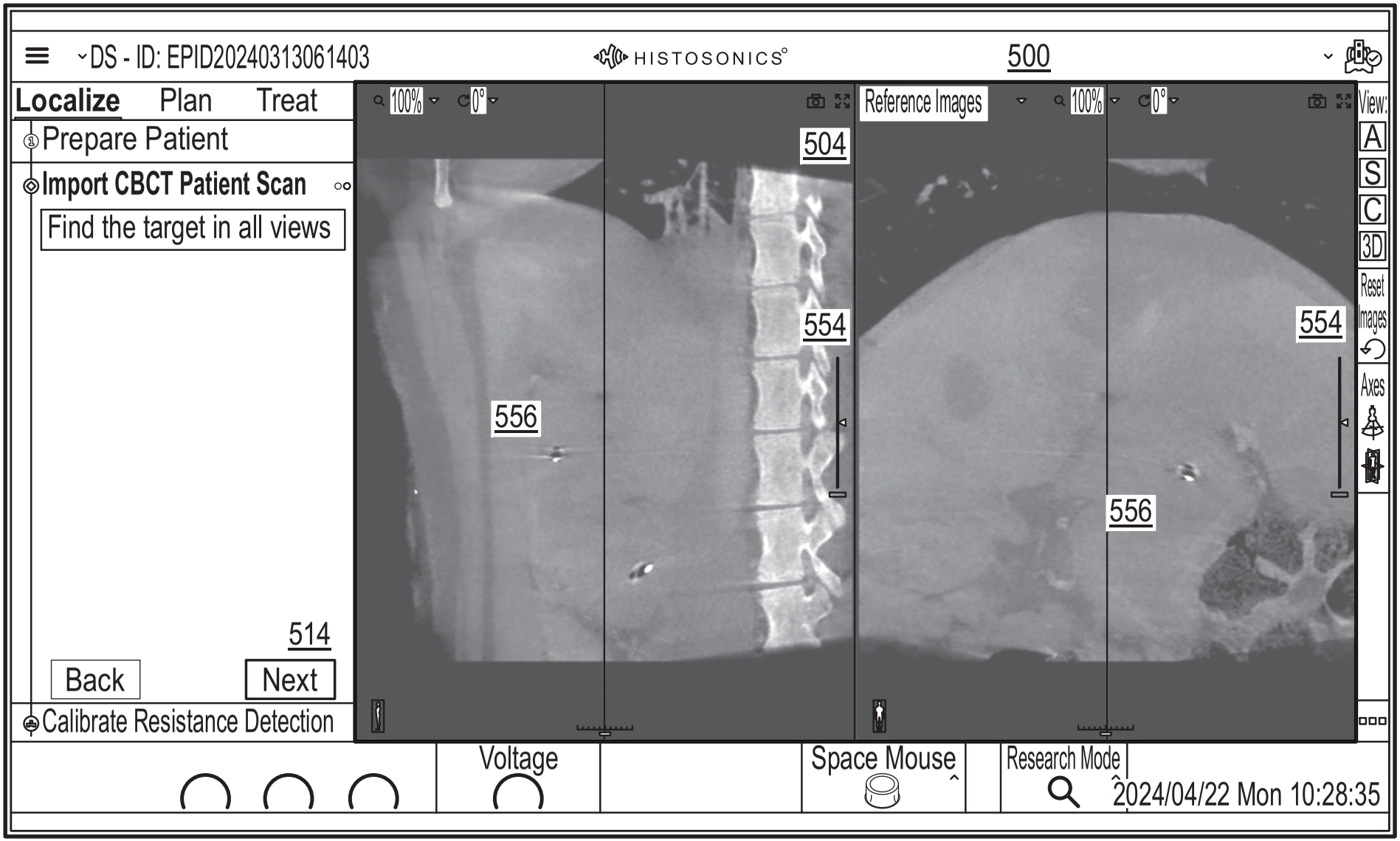
DS - ID: EPID20240313061403
HISTOSONICS
500
Localize
Plan
Treat
Prepare Patient
Import CBCT Patient Scan
Find the target in all views
514
Back
Next
Calibrate Resistance Detection
100%
0°
504
554
556
Reference Images
100%
0°
554
556
View:
A
S
C
3D
Reset Images
Axes
Voltage
Space Mouse
Research Mode
2024/04/22 Mon 10:28:35

FIG. 31

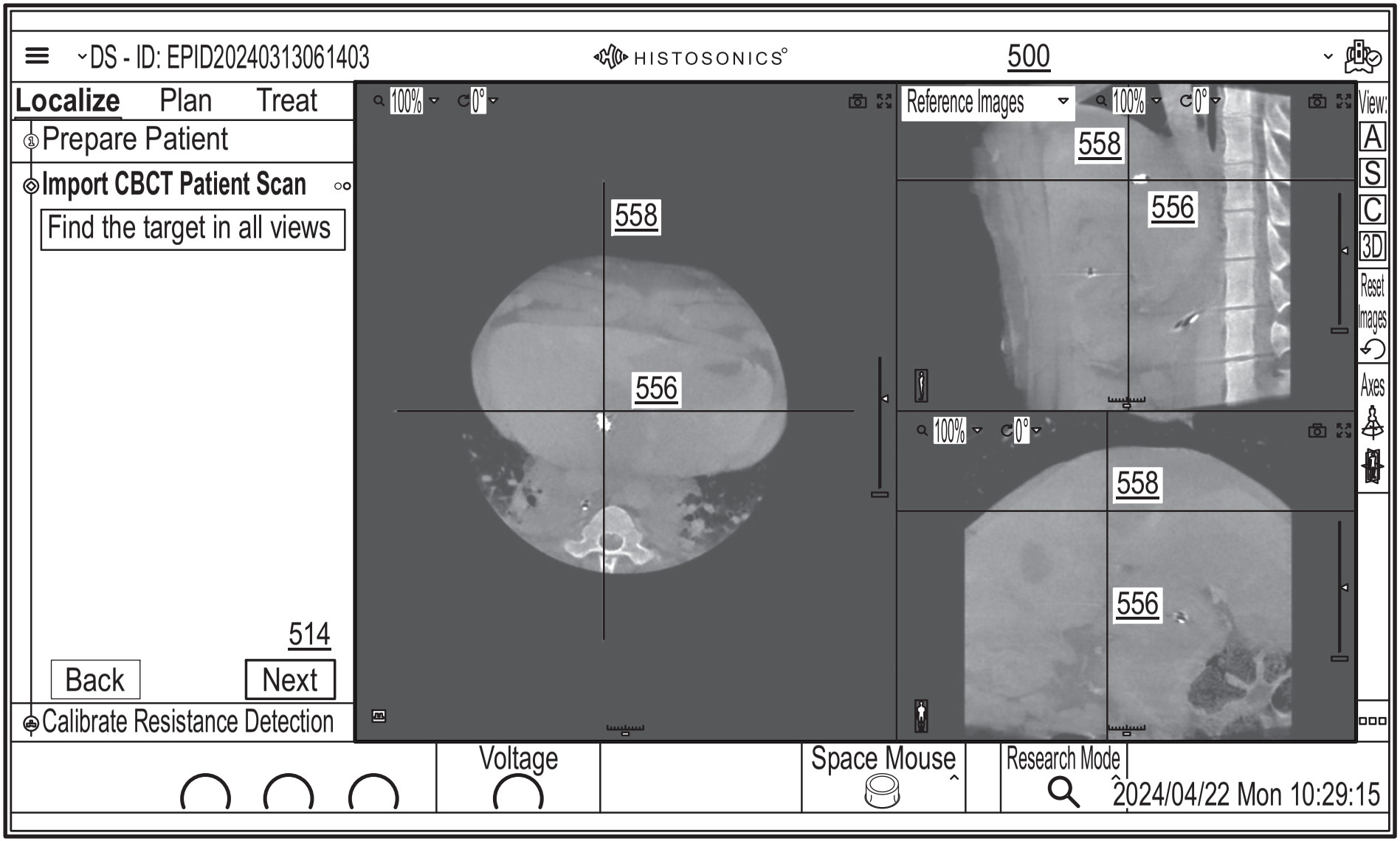
DS - ID: EPID20240313061403
HISTOSONICS
500
Localize
Plan
Treat
Prepare Patient
Import CBCT Patient Scan
Find the target in all views
514
Back
Next
Calibrate Resistance Detection
100%
0°
558
556
Reference Images
View:
A
S
C
3D
Reset Images
Axes
Voltage
Space Mouse
Research Mode
2024/04/22 Mon 10:29:15

FIG. 32

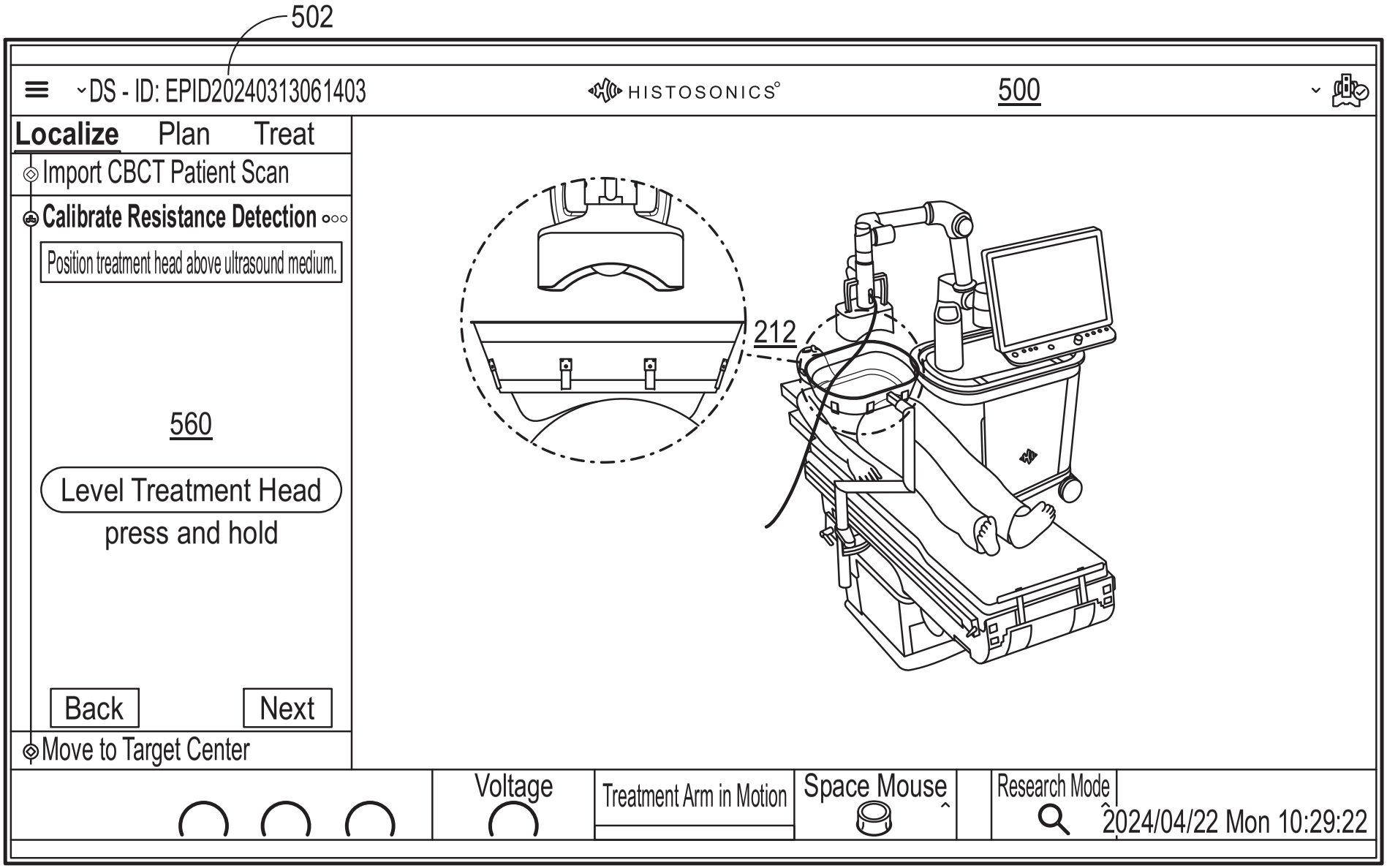
502
DS - ID: EPID20240313061403
HISTOSONICS
500
Localize
Plan
Treat
Import CBCT Patient Scan
Calibrate Resistance Detection
Position treatment head above ultrasound medium.
560
Level Treatment Head
press and hold
Back
Next
Move to Target Center
212
Voltage
Treatment Arm in Motion
Space Mouse
Research Mode
2024/04/22 Mon 10:29:22

FIG. 33

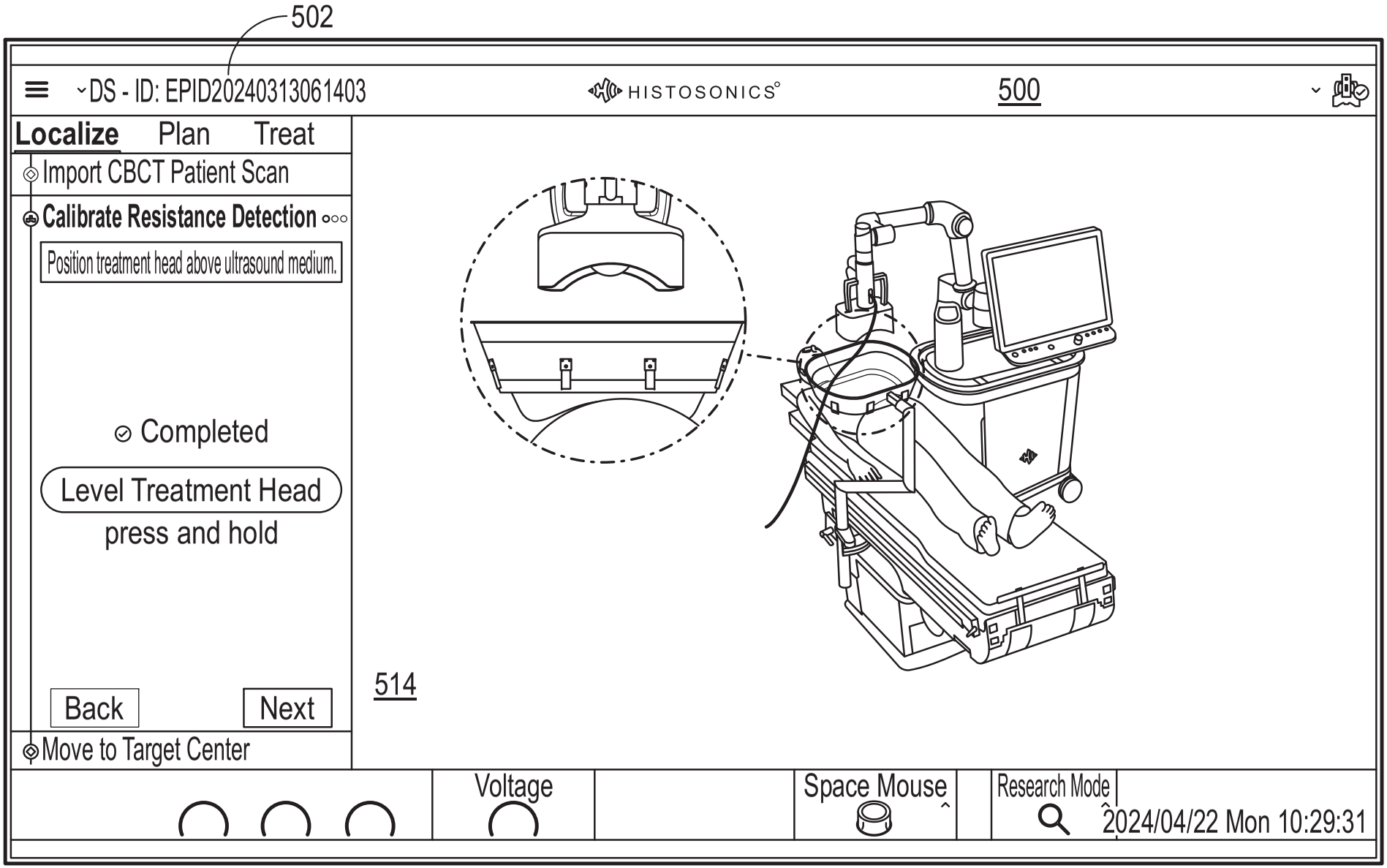
502
DS - ID: EPID20240313061403
HISTOSONICS
500
Localize
Plan
Treat
Import CBCT Patient Scan
Calibrate Resistance Detection
Position treatment head above ultrasound medium.
Completed
Level Treatment Head
press and hold
514
Back
Next
Move to Target Center
Voltage
Space Mouse
Research Mode
2024/04/22 Mon 10:29:31

FIG. 34

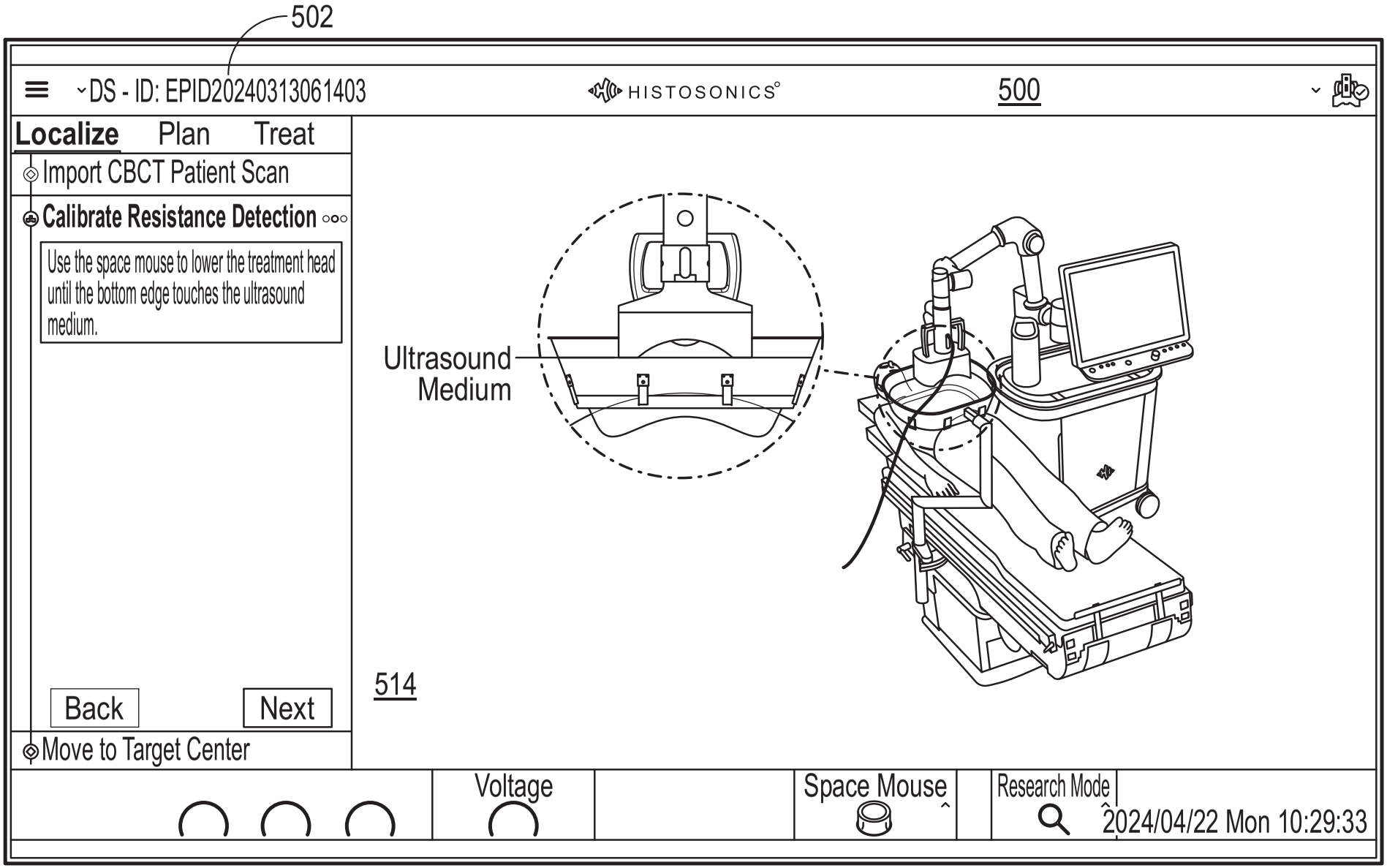
502
DS - ID: EPID20240313061403
HISTOSONICS
500
Localize
Plan
Treat
Import CBCT Patient Scan
Calibrate Resistance Detection
Use the space mouse to lower the treatment head until the bottom edge touches the ultrasound medium.
Ultrasound Medium
514
Back
Next
Move to Target Center
Voltage
Space Mouse
Research Mode
2024/04/22 Mon 10:29:33

FIG. 35

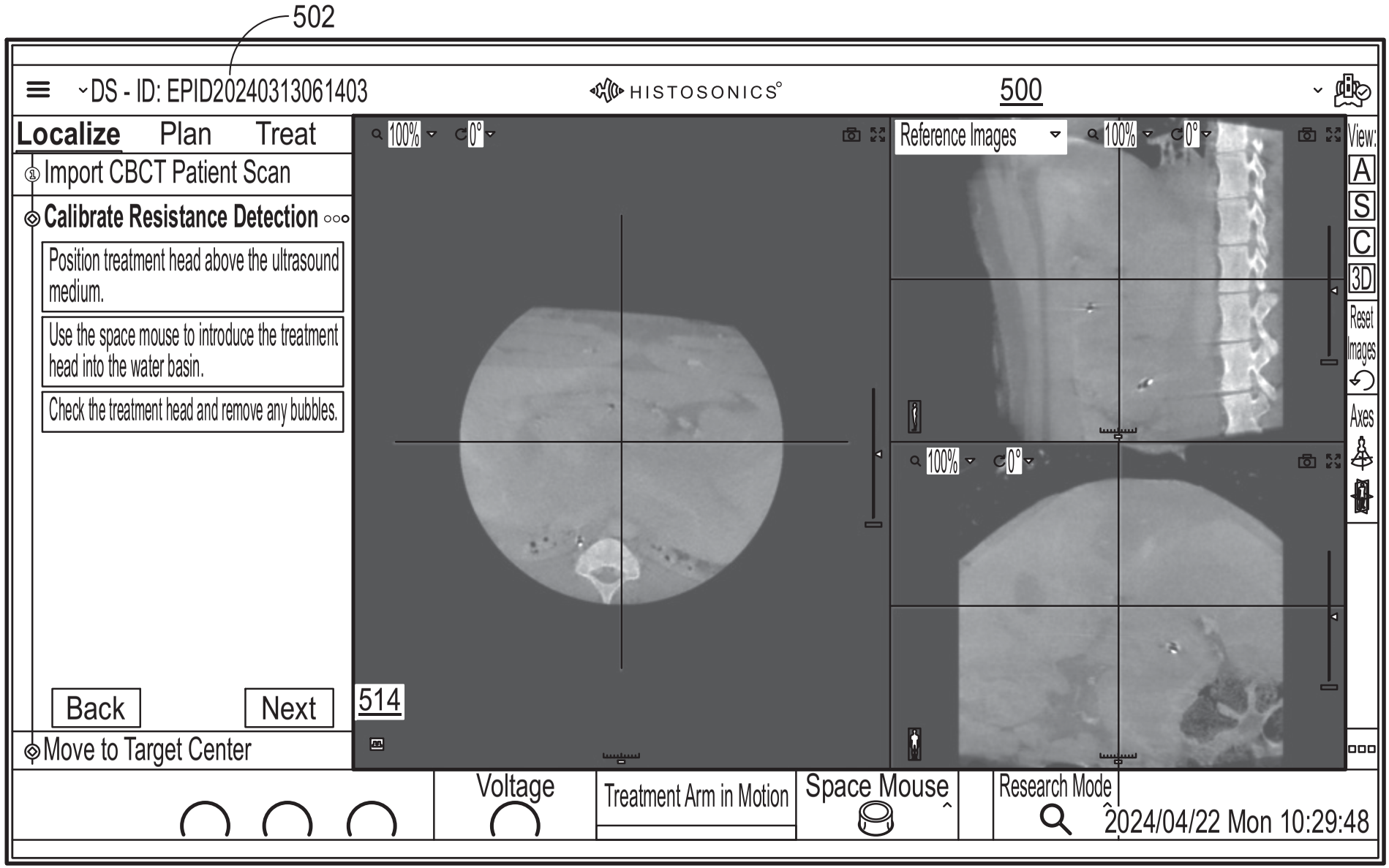
502
DS - ID: EPID20240313061403
HISTOSONICS
500
Localize
Plan
Treat
Import CBCT Patient Scan
Calibrate Resistance Detection
Position treatment head above the ultrasound medium.
Use the space mouse to introduce the treatment head into the water basin.
Check the treatment head and remove any bubbles.
Back
Next
Move to Target Center
514
100%
0°
Reference Images
View:
A
S
C
3D
Reset Images
Axes
Voltage
Treatment Arm in Motion
Space Mouse
Research Mode
2024/04/22 Mon 10:29:48

FIG. 36

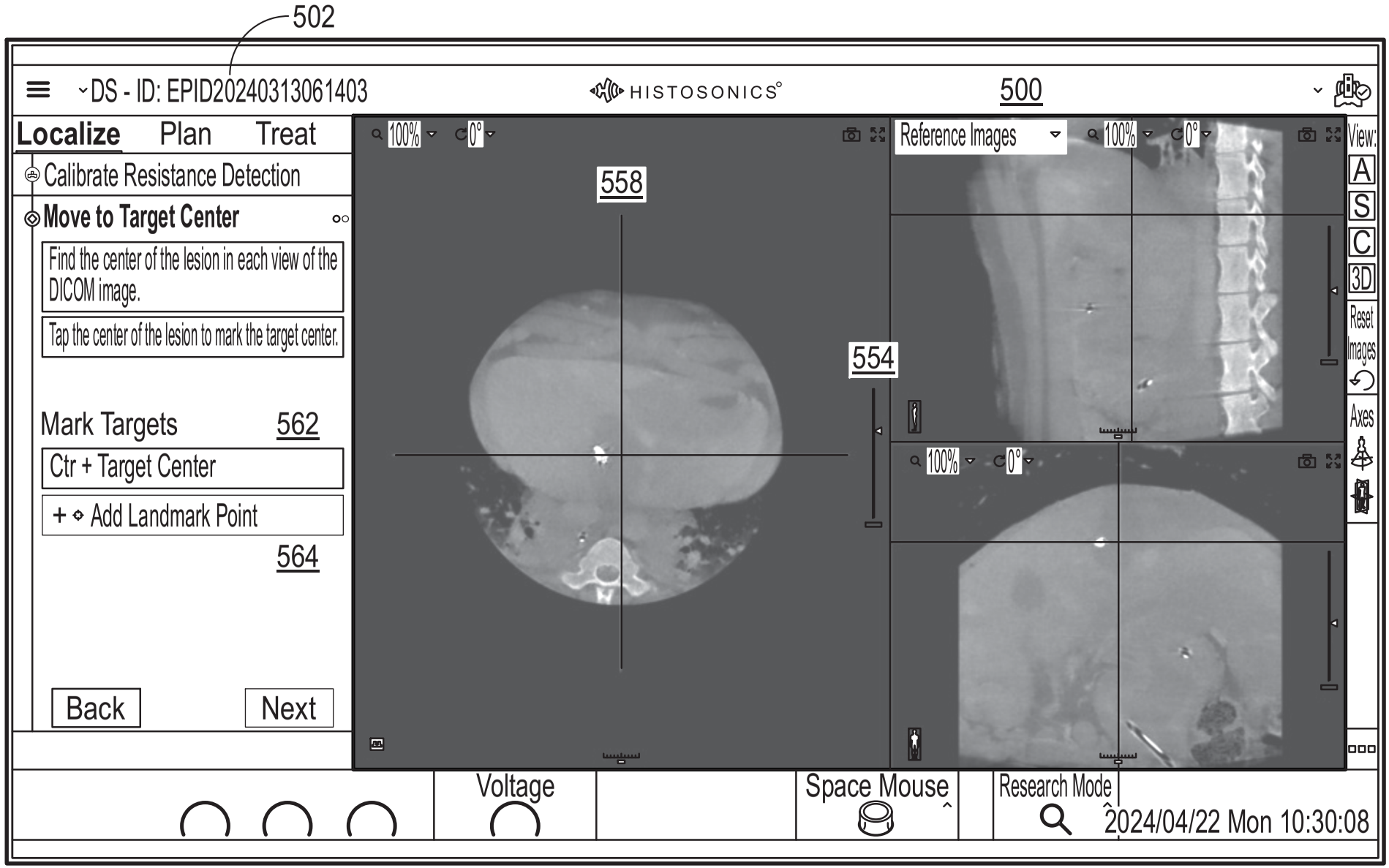
502
DS - ID: EPID20240313061403
HISTOSONICS
500
Localize
Plan
Treat
Calibrate Resistance Detection
Move to Target Center
Find the center of the lesion in each view of the DICOM image.
Tap the center of the lesion to mark the target center.
Mark Targets
562
Ctr + Target Center
Add Landmark Point
564
Back
Next
100%
0°
558
554
Reference Images
View:
A
S
C
3D
Reset Images
Axes
Voltage
Space Mouse
Research Mode
2024/04/22 Mon 10:30:08

FIG. 37

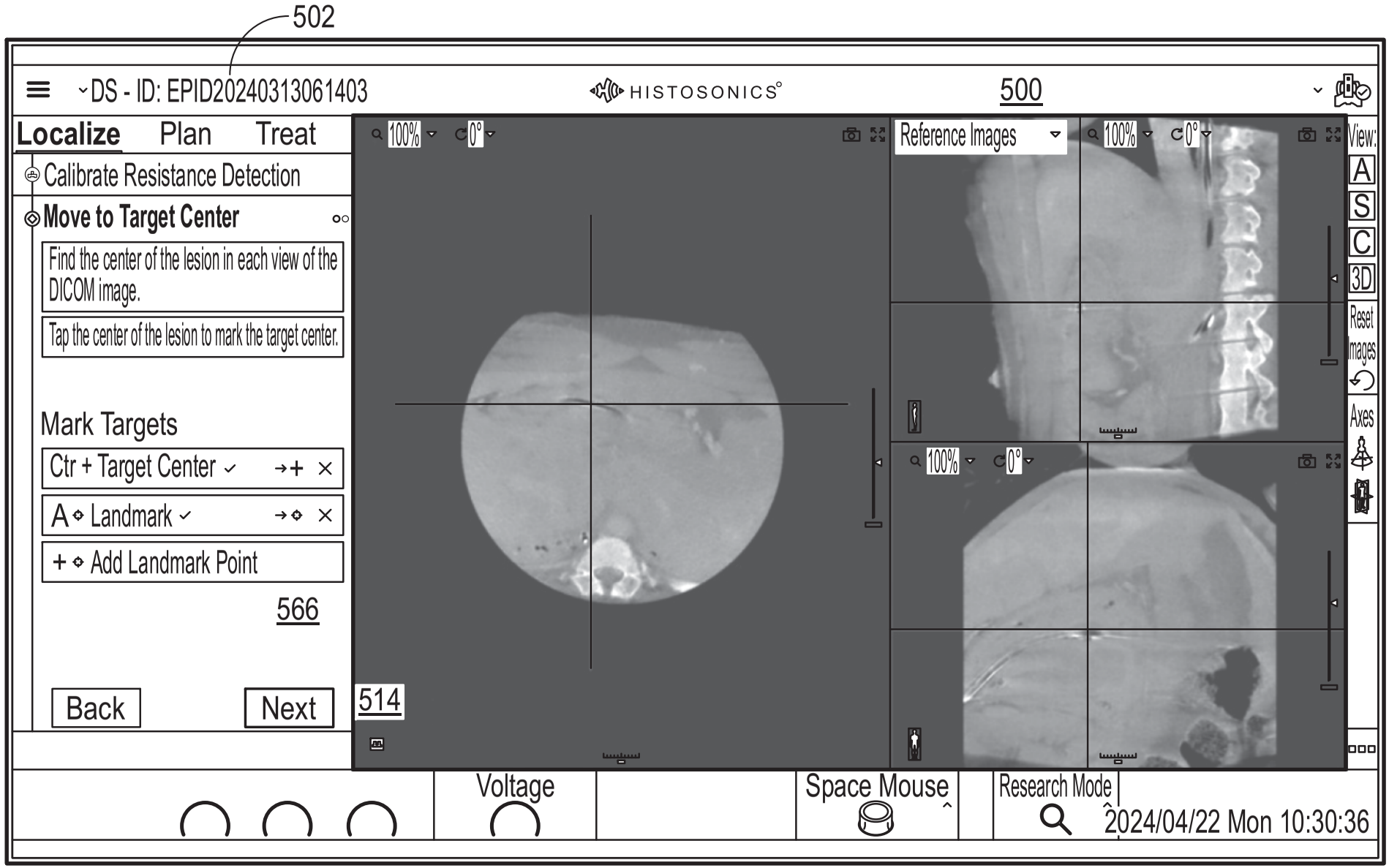
502
DS - ID: EPID20240313061403
HISTOSONICS
500
Localize
Plan
Treat
Calibrate Resistance Detection
Move to Target Center
Find the center of the lesion in each view of the DICOM image.
Tap the center of the lesion to mark the target center.
Mark Targets
Ctr + Target Center
A Landmark
+ Add Landmark Point
566
Back
Next
514
100%
0°
Reference Images
View:
A
S
C
3D
Reset Images
Axes
Voltage
Space Mouse
Research Mode
2024/04/22 Mon 10:30:36

FIG. 38

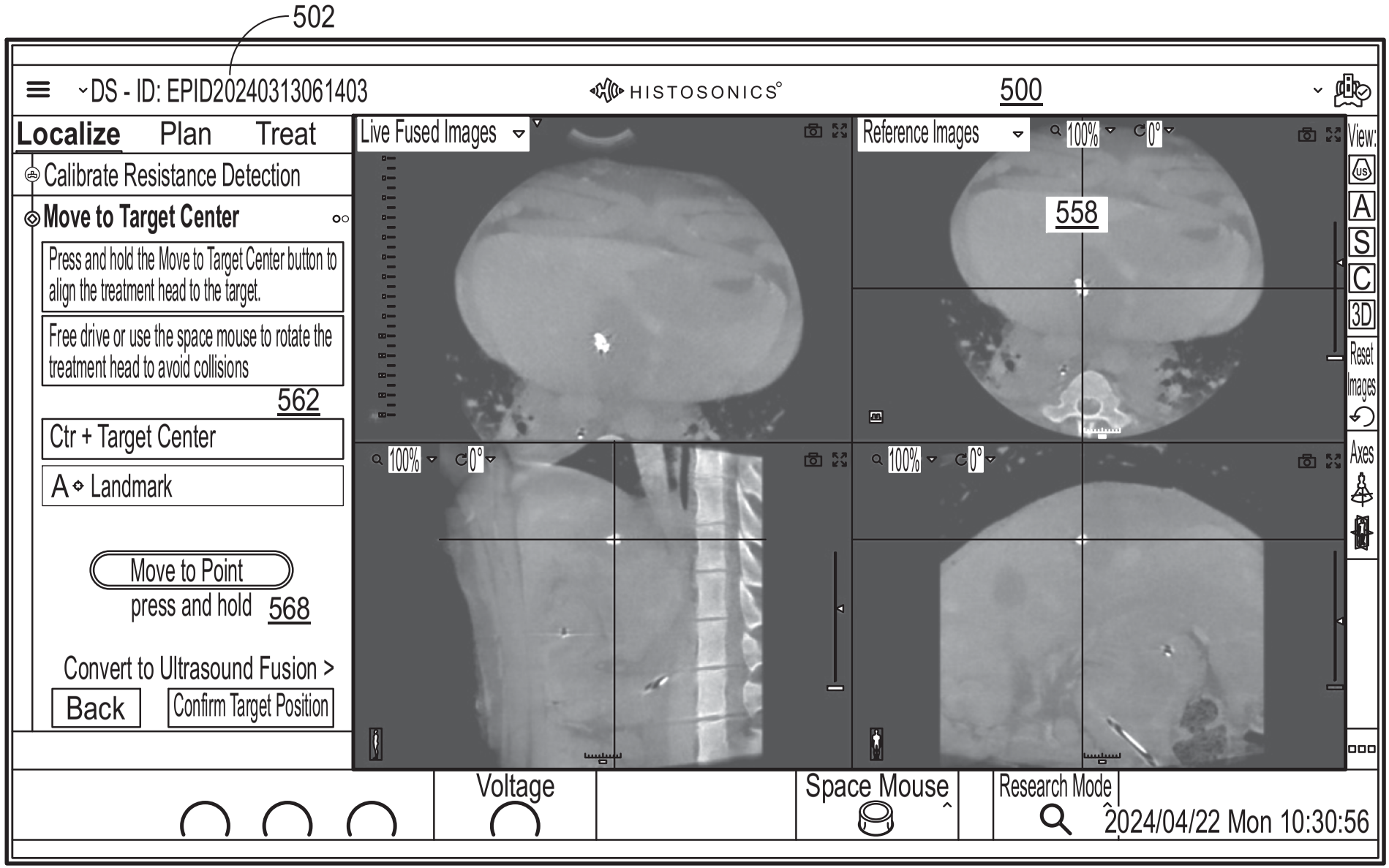
502
DS - ID: EPID20240313061403
HISTOSONICS
500
Localize
Plan
Treat
Calibrate Resistance Detection
Move to Target Center
Press and hold the Move to Target Center button to align the treatment head to the target.
Free drive or use the space mouse to rotate the treatment head to avoid collisions
562
Ctr + Target Center
A Landmark
Move to Point
press and hold 568
Convert to Ultrasound Fusion >
Back
Confirm Target Position
Live Fused Images
Reference Images
100%
0°
558
View:
US
A
S
C
3D
Reset Images
Axes
Voltage
Space Mouse
Research Mode
2024/04/22 Mon 10:30:56

FIG. 39

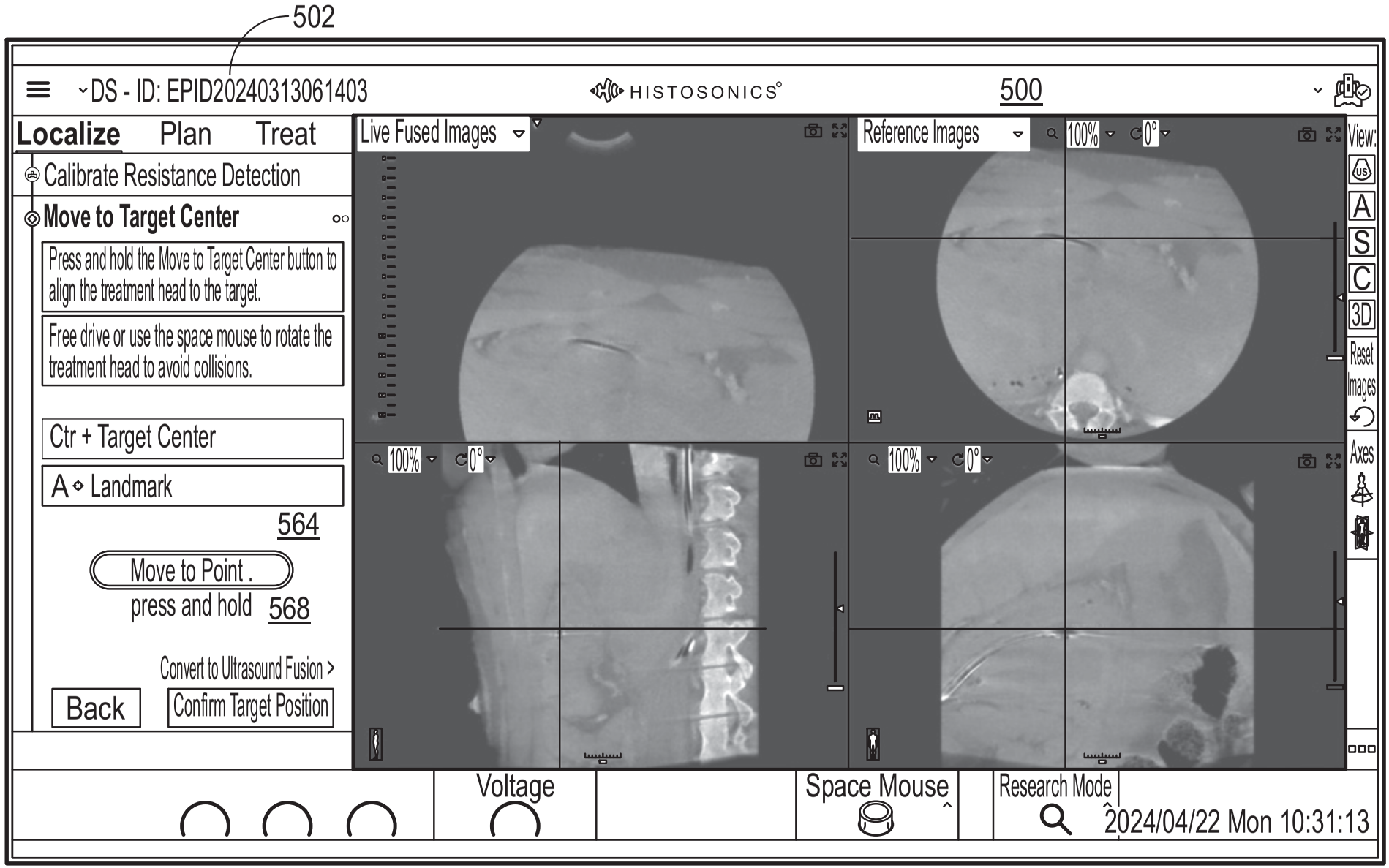
502
DS - ID: EPID20240313061403
HISTOSONICS
500
Localize
Plan
Treat
Calibrate Resistance Detection
Move to Target Center
Press and hold the Move to Target Center button to align the treatment head to the target.
Free drive or use the space mouse to rotate the treatment head to avoid collisions.
Ctr + Target Center
A Landmark
564
Move to Point .
press and hold 568
Convert to Ultrasound Fusion >
Back
Confirm Target Position
Live Fused Images
Reference Images
100%
0°
View:
US
A
S
C
3D
Reset Images
Axes
Voltage
Space Mouse
Research Mode
2024/04/22 Mon 10:31:13

FIG. 40

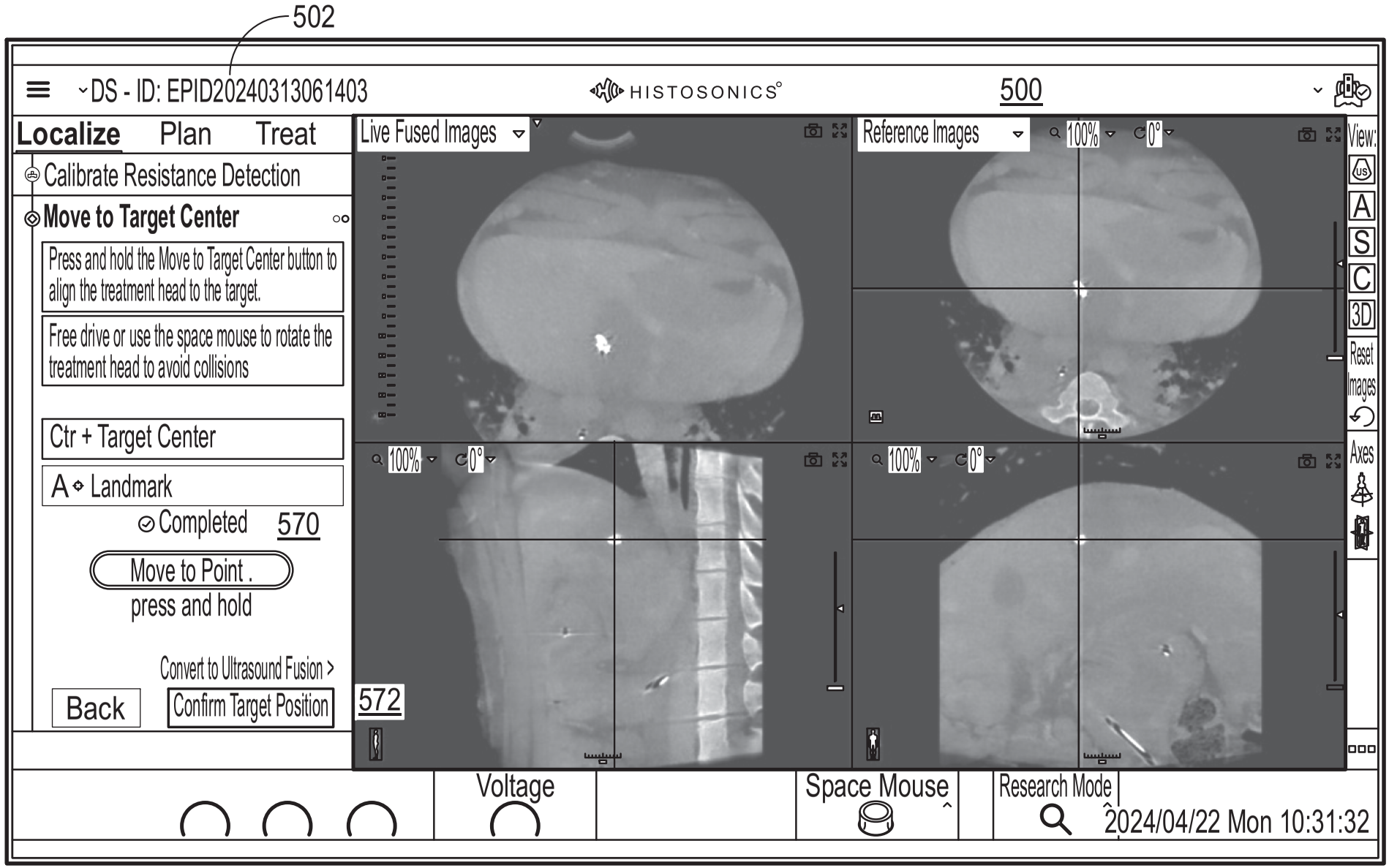
502
DS - ID: EPID20240313061403
HISTOSONICS
500
Localize
Plan
Treat
Calibrate Resistance Detection
Move to Target Center
Press and hold the Move to Target Center button to align the treatment head to the target.
Free drive or use the space mouse to rotate the treatment head to avoid collisions
Ctr + Target Center
A Landmark
Completed
570
Move to Point .
press and hold
Convert to Ultrasound Fusion >
Back
Confirm Target Position
572
Live Fused Images
Reference Images
100%
0°
View:
US
A
S
C
3D
Reset Images
Axes
Voltage
Space Mouse
Research Mode
2024/04/22 Mon 10:31:32

FIG. 41

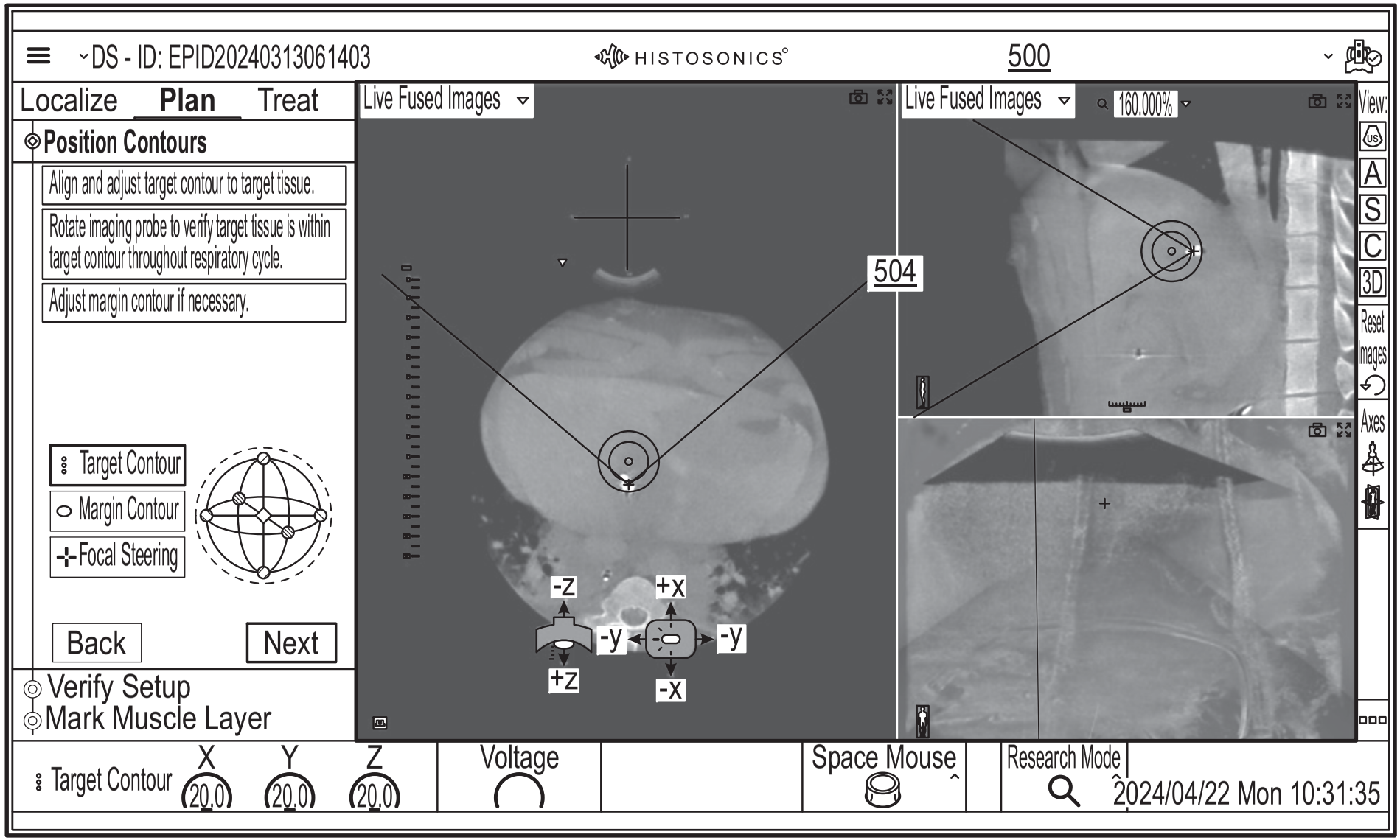
DS - ID: EPID20240313061403
HISTOSONICS
500
Localize
Plan
Treat
Position Contours
Align and adjust target contour to target tissue.
Rotate imaging probe to verify target tissue is within target contour throughout respiratory cycle.
Adjust margin contour if necessary.
Target Contour
Margin Contour
Focal Steering
Back
Next
Verify Setup
Mark Muscle Layer
Live Fused Images
504
Live Fused Images
160.000%
View:
US
A
S
C
3D
Reset Images
Axes
-z
+x
-y
-y
+z
-x
Target Contour
X
Y
Z
20.0
20.0
20.0
Voltage
Space Mouse
Research Mode
2024/04/22 Mon 10:31:35

FIG. 42

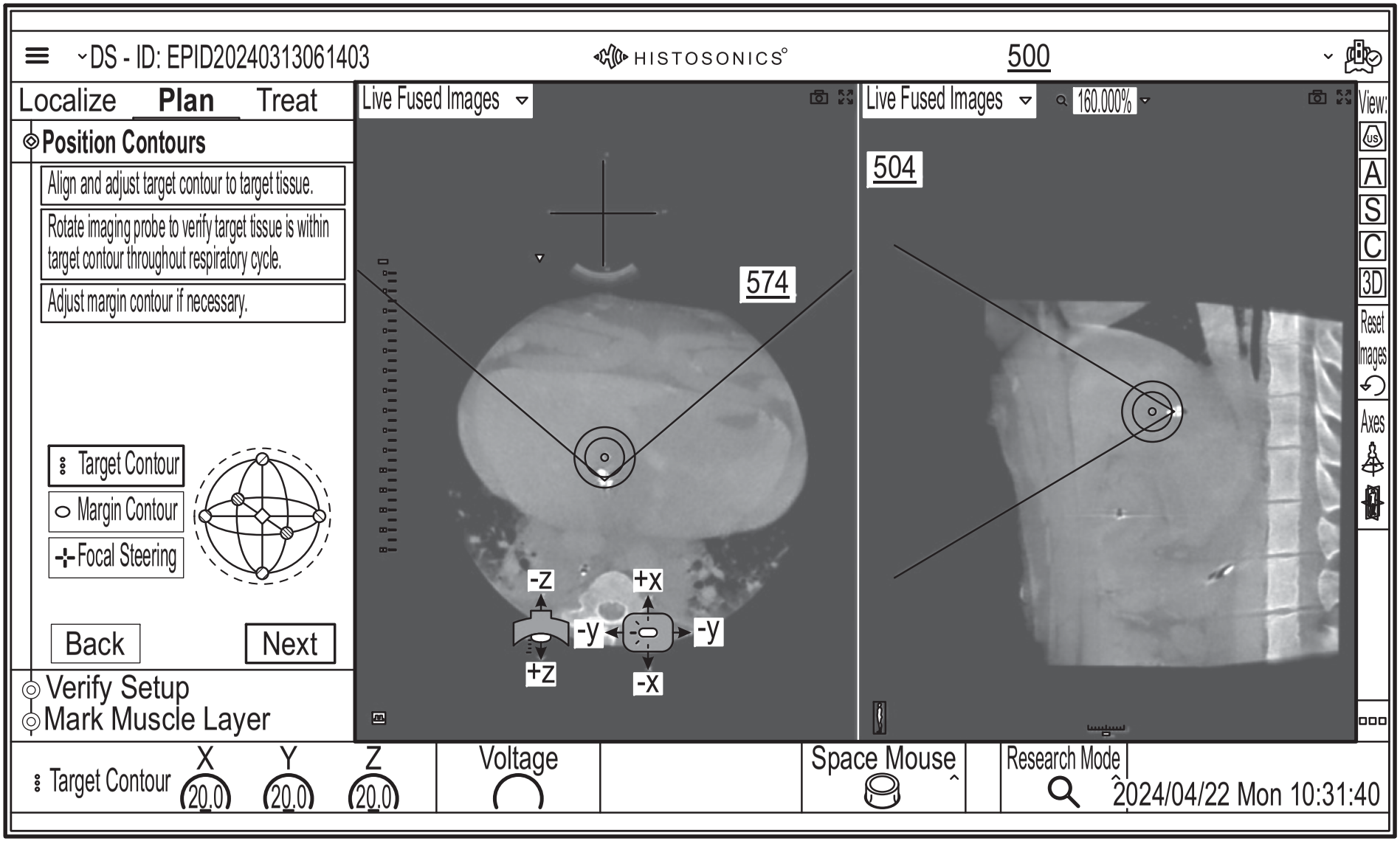
DS - ID: EPID20240313061403
HISTOSONICS
500
Localize
Plan
Treat
Position Contours
Align and adjust target contour to target tissue.
Rotate imaging probe to verify target tissue is within target contour throughout respiratory cycle.
Adjust margin contour if necessary.
Target Contour
Margin Contour
Focal Steering
Back
Next
Verify Setup
Mark Muscle Layer
Live Fused Images
574
-z
+x
-y
-y
+z
-x
Live Fused Images
160.000%
504
View:
US
A
S
C
3D
Reset Images
Axes
Target Contour
X
Y
Z
20.0
20.0
20.0
Voltage
Space Mouse
Research Mode
2024/04/22 Mon 10:31:40

FIG. 43

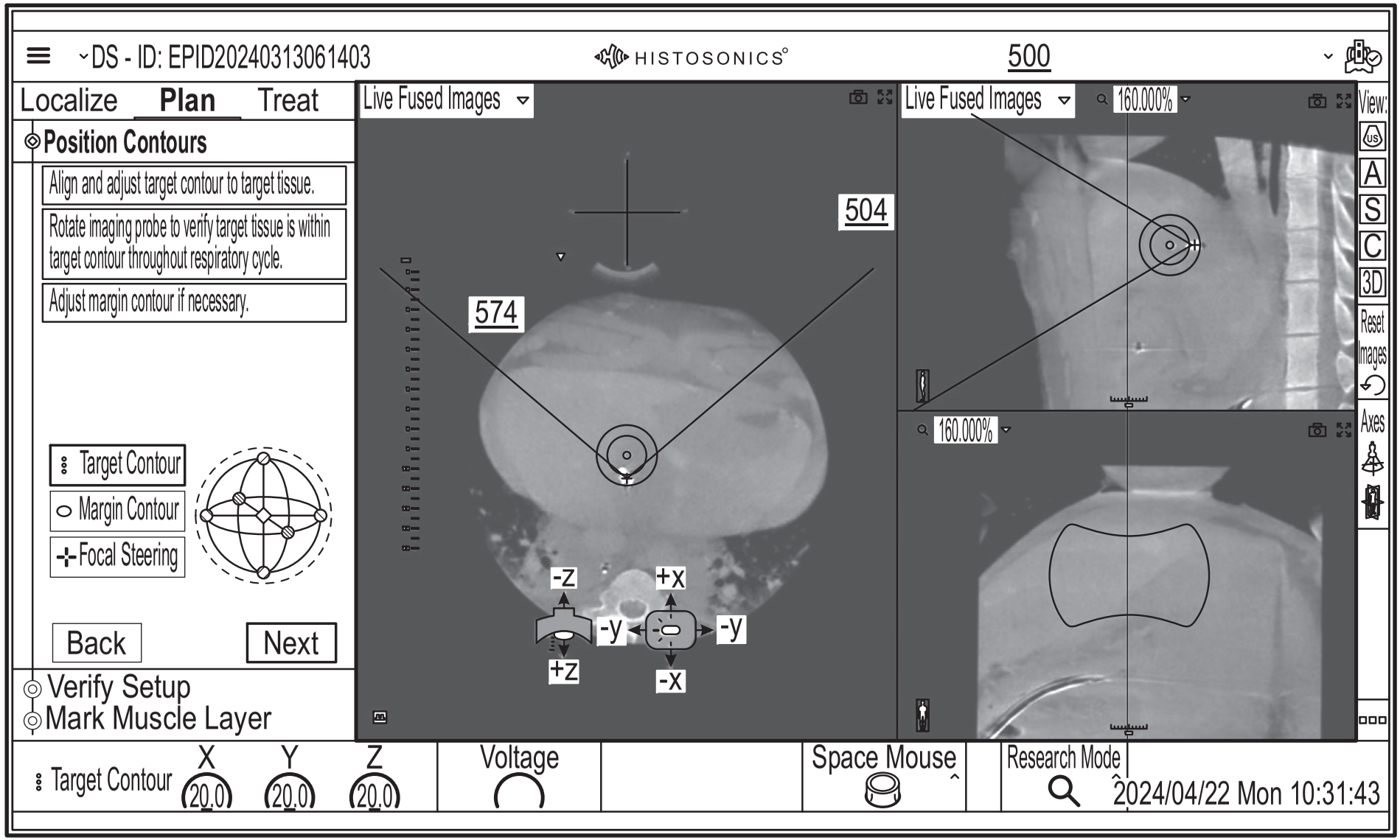
DS - ID: EPID20240313061403
HISTOSONICS
500
Localize
Plan
Treat
Position Contours
Align and adjust target contour to target tissue.
Rotate imaging probe to verify target tissue is within target contour throughout respiratory cycle.
Adjust margin contour if necessary.
Target Contour
Margin Contour
Focal Steering
Back
Next
Verify Setup
Mark Muscle Layer
Live Fused Images
504
574
-z
+x
-y
-y
+z
-x
Live Fused Images
160.000%
160.000%
View:
US
A
S
C
3D
Reset Images
Axes
Target Contour
X
Y
Z
20.0
20.0
20.0
Voltage
Space Mouse
Research Mode
2024/04/22 Mon 10:31:43

FIG. 44

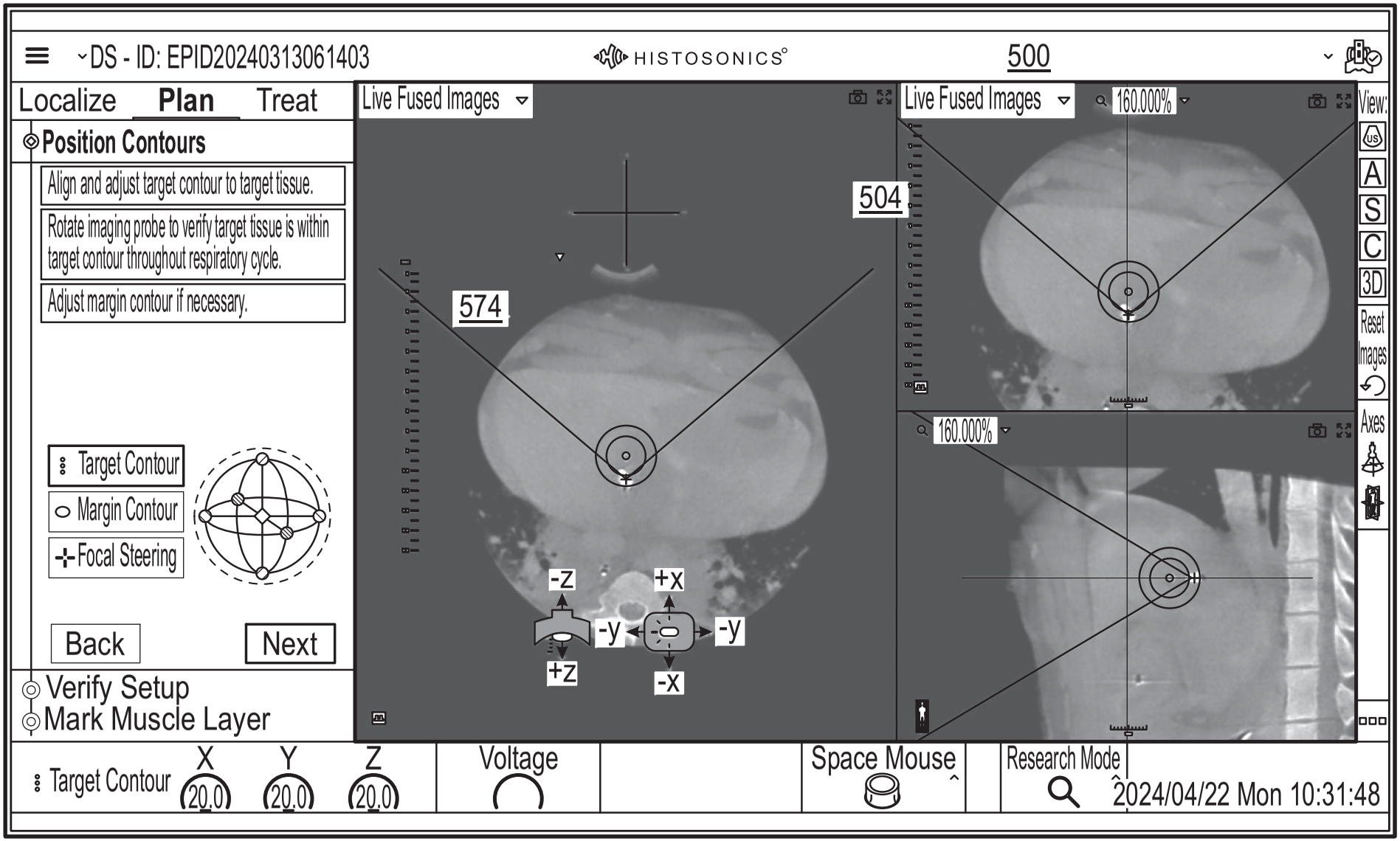
DS - ID: EPID20240313061403
HISTOSONICS
500
Localize
Plan
Treat
Position Contours
Align and adjust target contour to target tissue.
Rotate imaging probe to verify target tissue is within target contour throughout respiratory cycle.
Adjust margin contour if necessary.
Target Contour
Margin Contour
Focal Steering
Back
Next
Verify Setup
Mark Muscle Layer
Live Fused Images
574
504
Live Fused Images
160.000%
160.000%
View:
US
A
S
C
3D
Reset Images
Axes
-z
+x
-y
-y
+z
-x
Target Contour
X
Y
Z
20.0
20.0
20.0
Voltage
Space Mouse
Research Mode
2024/04/22 Mon 10:31:48

FIG. 45

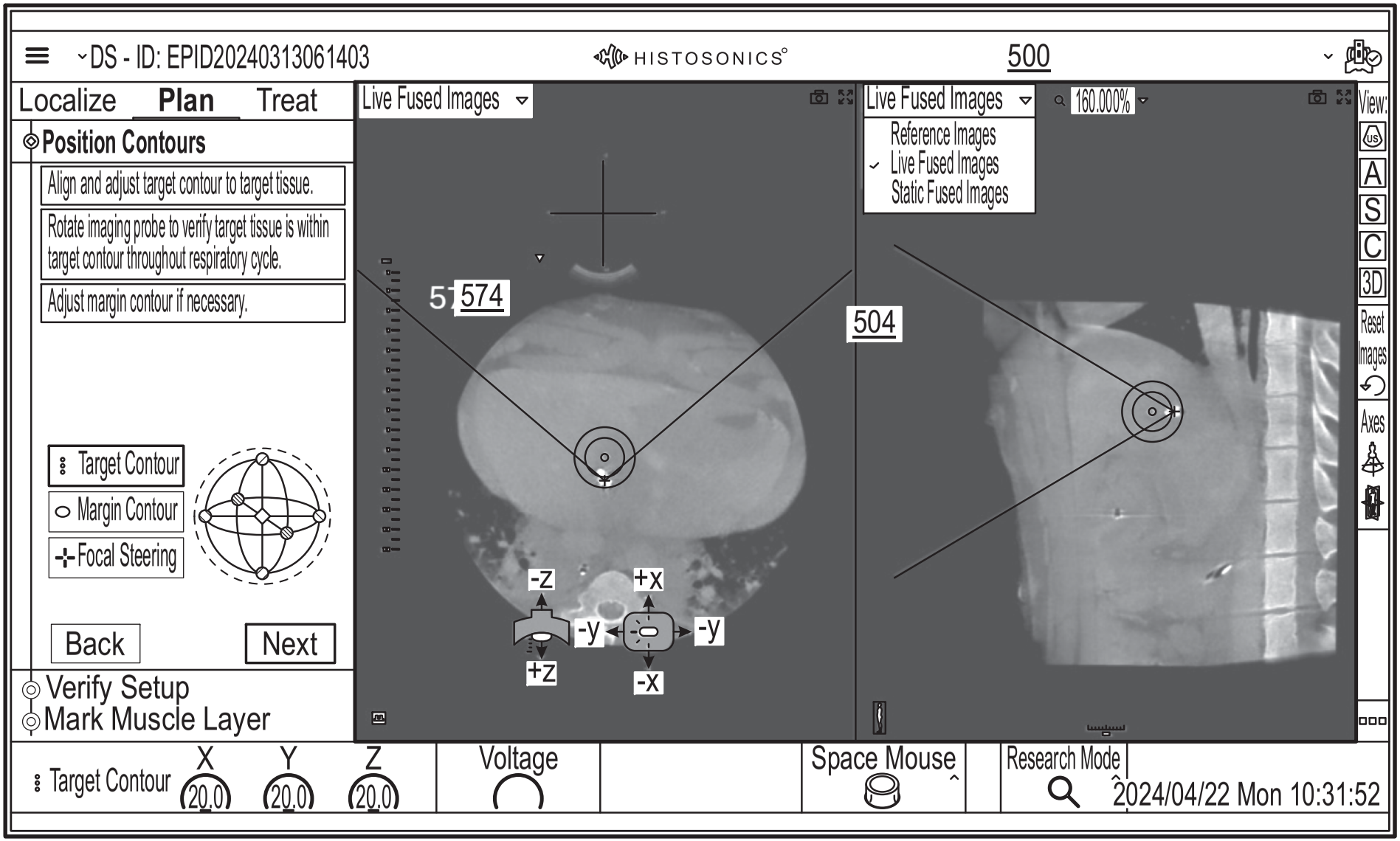
DS - ID: EPID20240313061403
HISTOSONICS
500
Localize
Plan
Treat
Position Contours
Align and adjust target contour to target tissue.
Rotate imaging probe to verify target tissue is within target contour throughout respiratory cycle.
Adjust margin contour if necessary.
Target Contour
Margin Contour
Focal Steering
Back
Next
Verify Setup
Mark Muscle Layer
Live Fused Images
574
Live Fused Images
160.000%
Reference Images
Live Fused Images
Static Fused Images
504
View:
US
A
S
C
3D
Reset Images
Axes
-z
+x
-y
-y
+z
-x
Target Contour
X
Y
Z
20.0
20.0
20.0
Voltage
Space Mouse
Research Mode
2024/04/22 Mon 10:31:52

FIG. 46