FIG.1

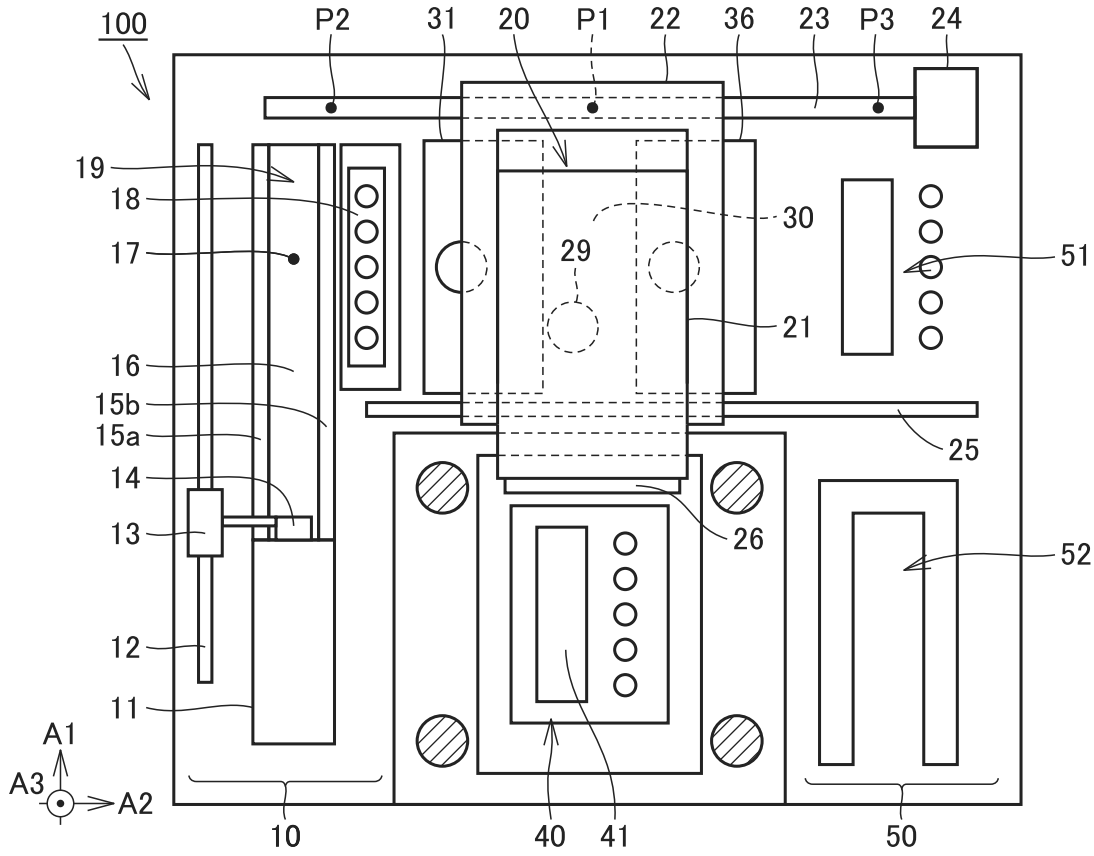
100
P2
31
20
P1
22
36
23
P3
24
19
18
17
16
15b
15a
14
13
12
11
30
29
21
51
25
26
52
A1
A3
A2
10
40
41
50

FIG.2

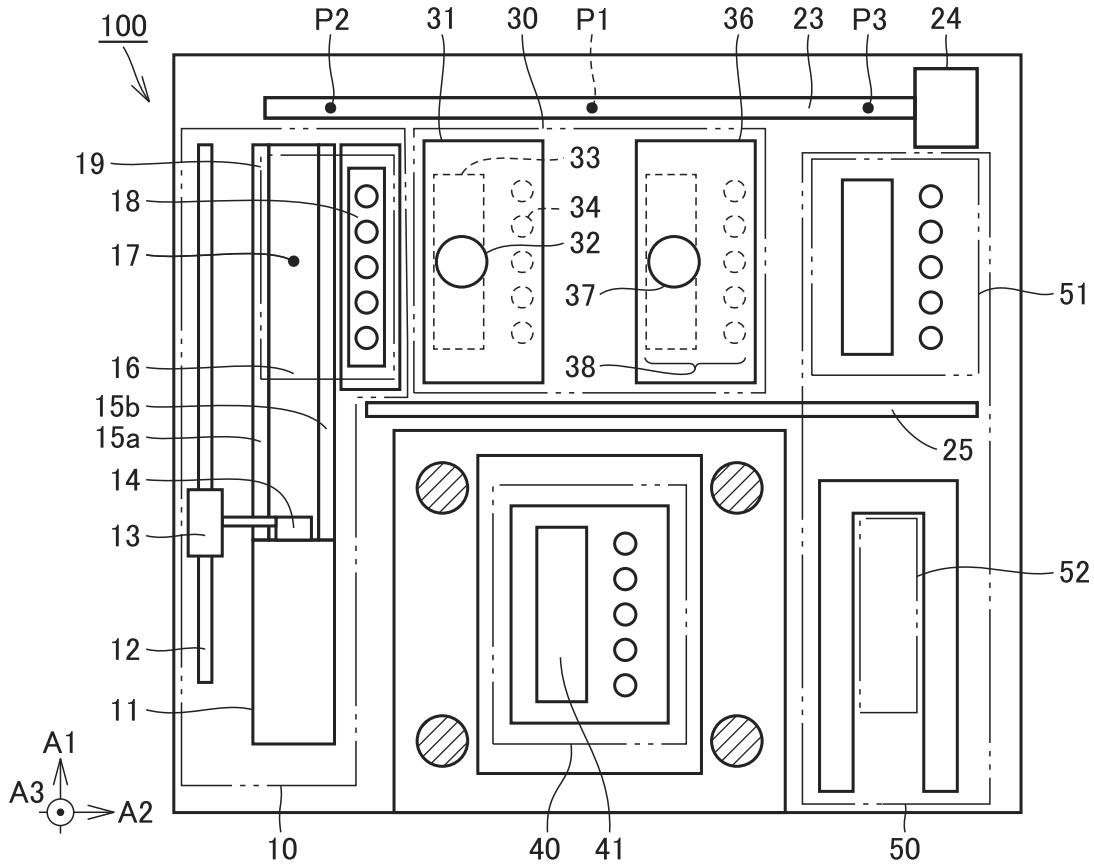
100
P2
31
30
P1
36
23
P3
24
19
18
17
16
15b
15a
14
13
12
11
33
34
32
37
38
51
25
52
A1
A3
A2
10
40
41
50

FIG.3

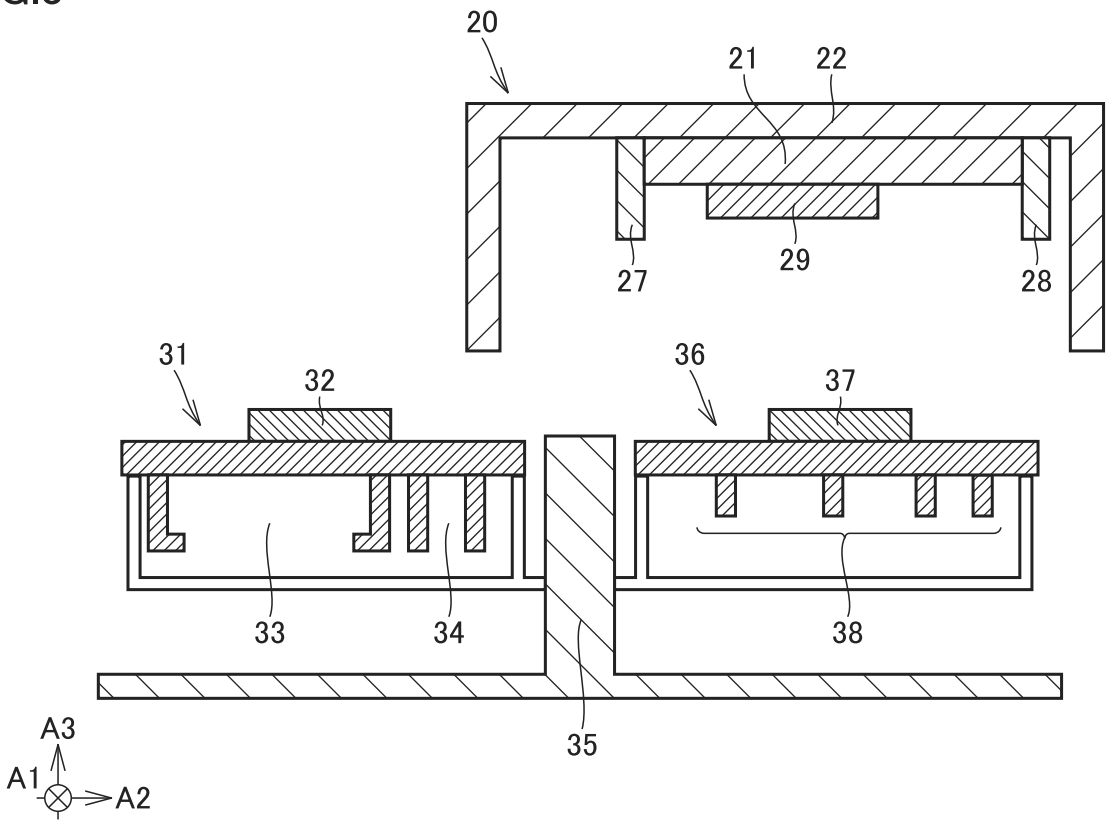
20
21
22
27
29
28
31
32
36
37
33
34
38
35
A3
A1
A2

FIG.4

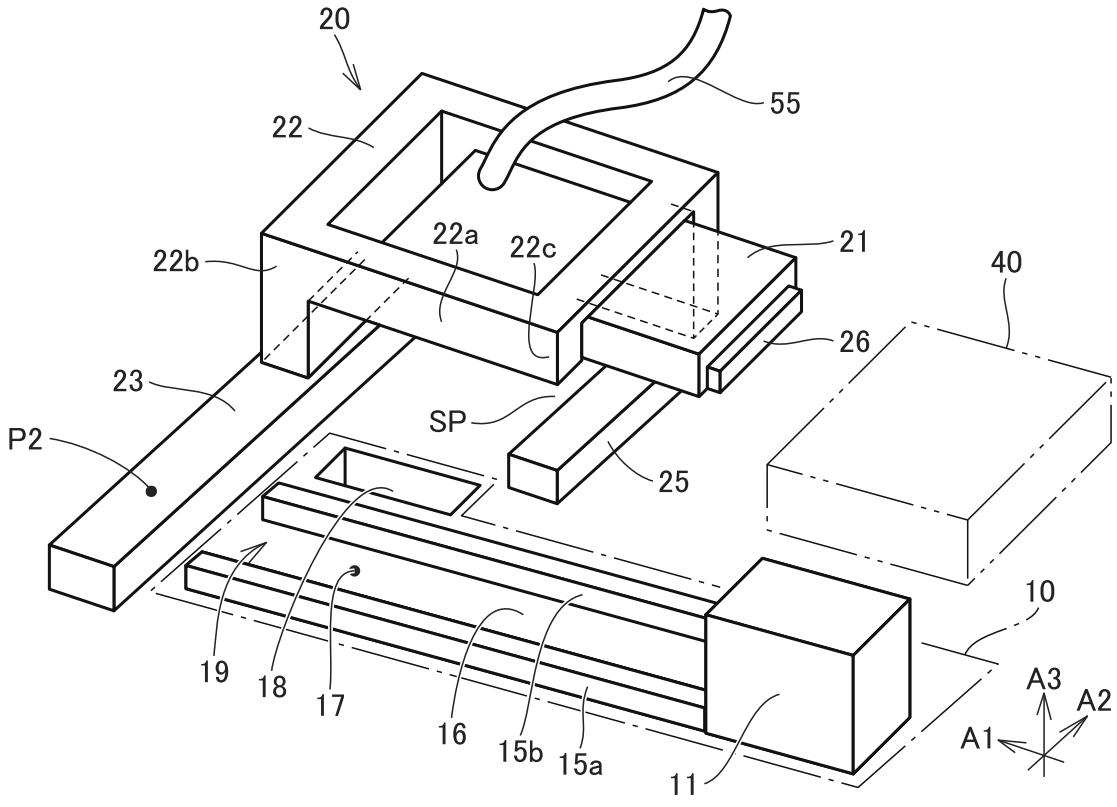
20
55
22
22a
22c
21
22b
40
26
23
SP
P2
25
10
19
18
17
16
15b
15a
11
A3
A2
A1

FIG.5

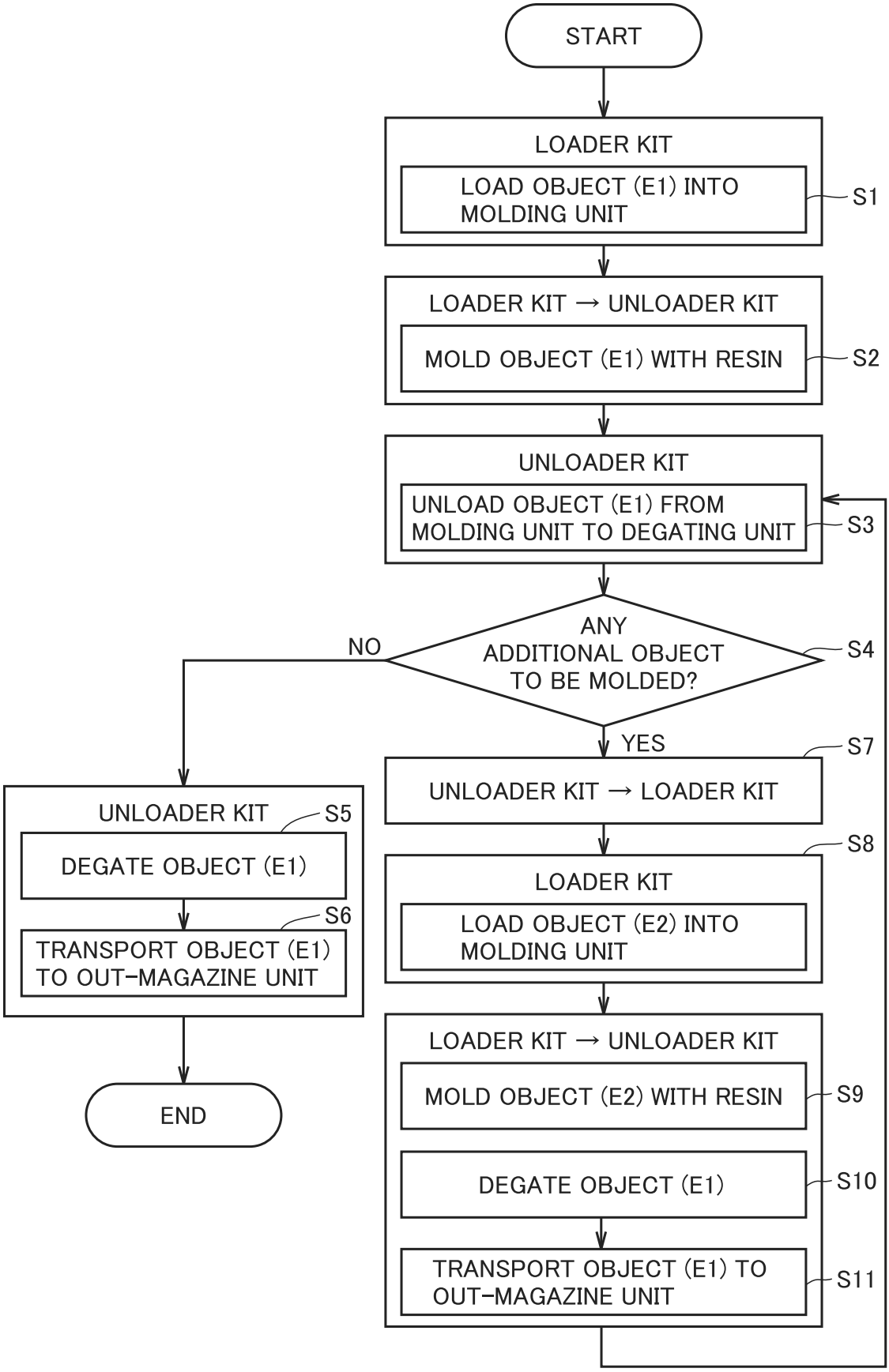
START
LOADER KIT
LOAD OBJECT (E1) INTO MOLDING UNIT
S1
LOADER KIT → UNLOADER KIT
MOLD OBJECT (E1) WITH RESIN
S2
UNLOADER KIT
UNLOAD OBJECT (E1) FROM MOLDING UNIT TO DEGATING UNIT
S3
ANY ADDITIONAL OBJECT TO BE MOLDED?
S4
NO
YES
UNLOADER KIT
DEGATE OBJECT (E1)
S5
TRANSPORT OBJECT (E1) TO OUT-MAGAZINE UNIT
S6
END
UNLOADER KIT → LOADER KIT
S7
LOADER KIT
LOAD OBJECT (E2) INTO MOLDING UNIT
S8
LOADER KIT → UNLOADER KIT
MOLD OBJECT (E2) WITH RESIN
S9
DEGATE OBJECT (E1)
S10
TRANSPORT OBJECT (E1) TO OUT-MAGAZINE UNIT
S11