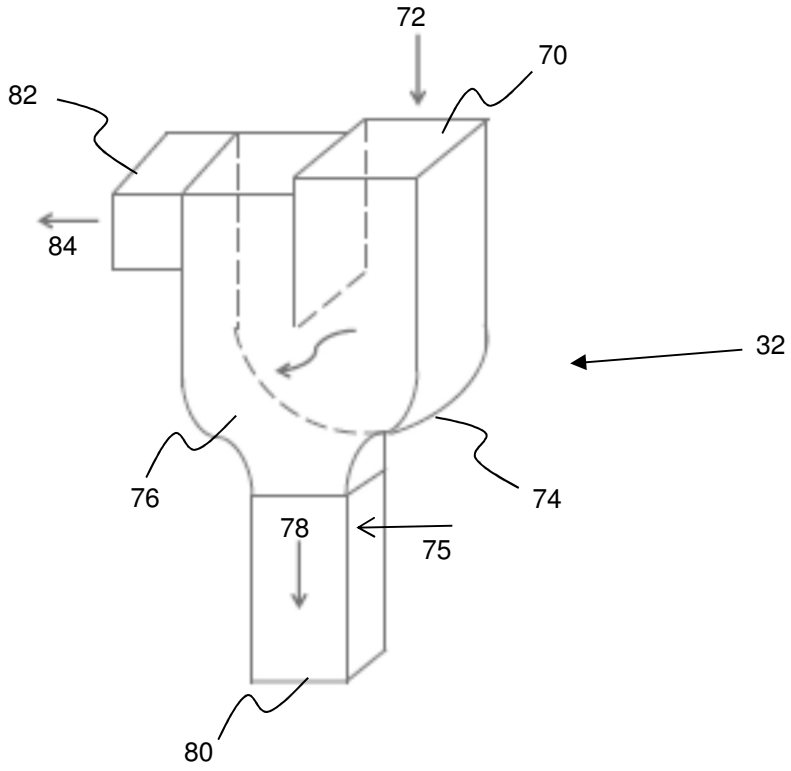

FIGURE 3

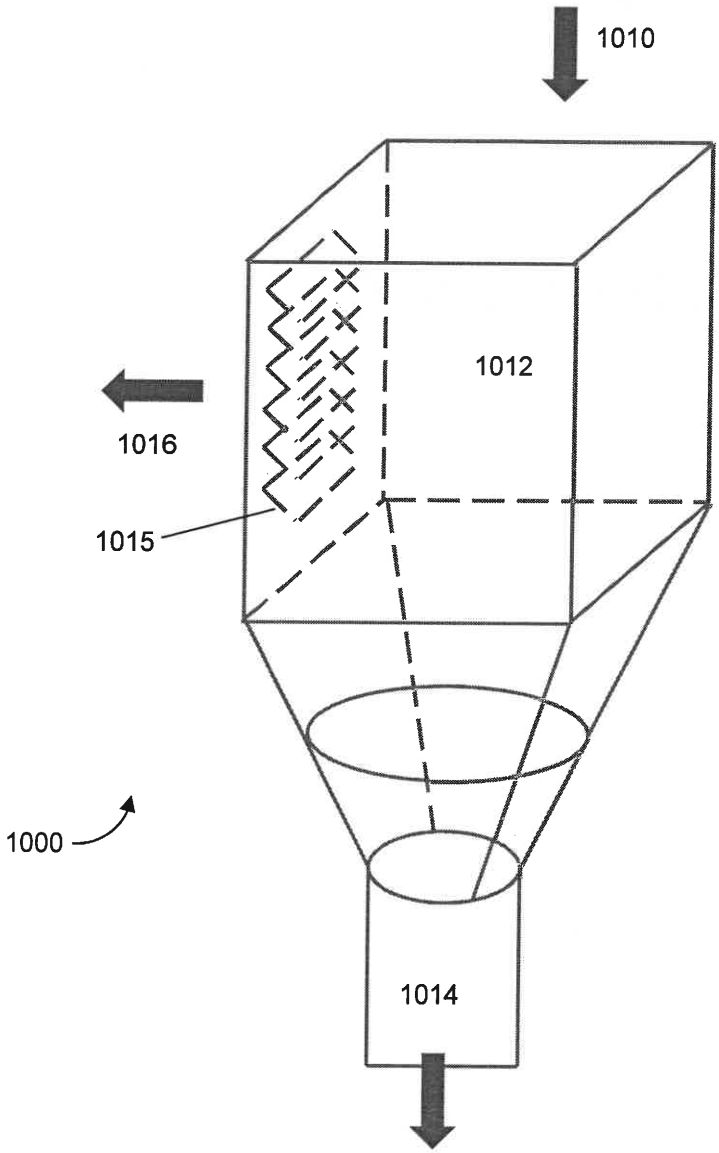

FIGURE 5