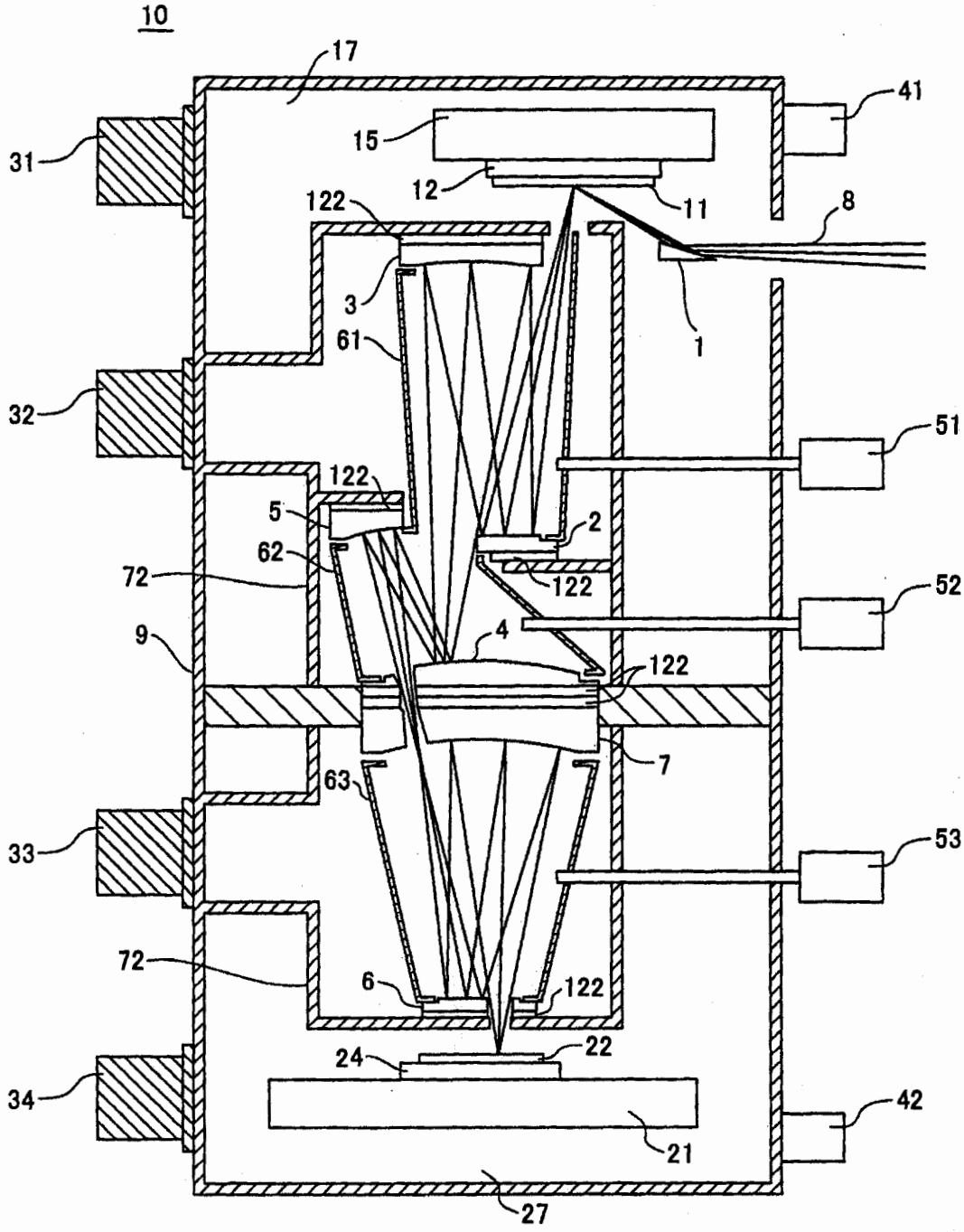
10
17
41
31
15
12
11
8
122
3
61
1
32
51
122
5
2
62
72
122
52
9
4
122
7
63
33
53
72
6
122
24
22
34
42
21
27

FIG. 1

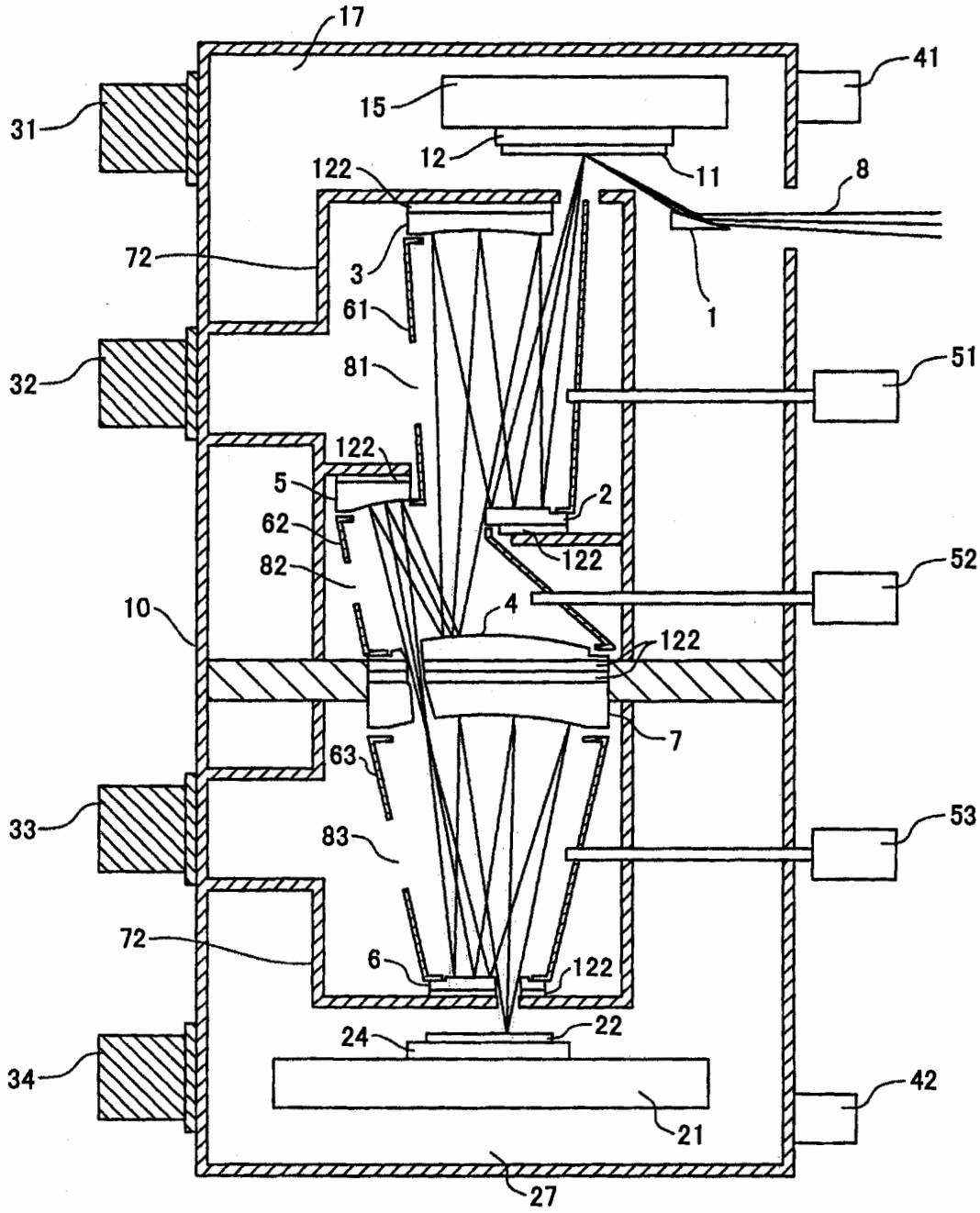
17
41
31
15
12
11
8
122
72
3
1
61
81
51
32
122
5
2
62
122
82
52
10
4
122
7
63
53
33
83
72
6
122
22
24
34
42
21
27

FIG. 2

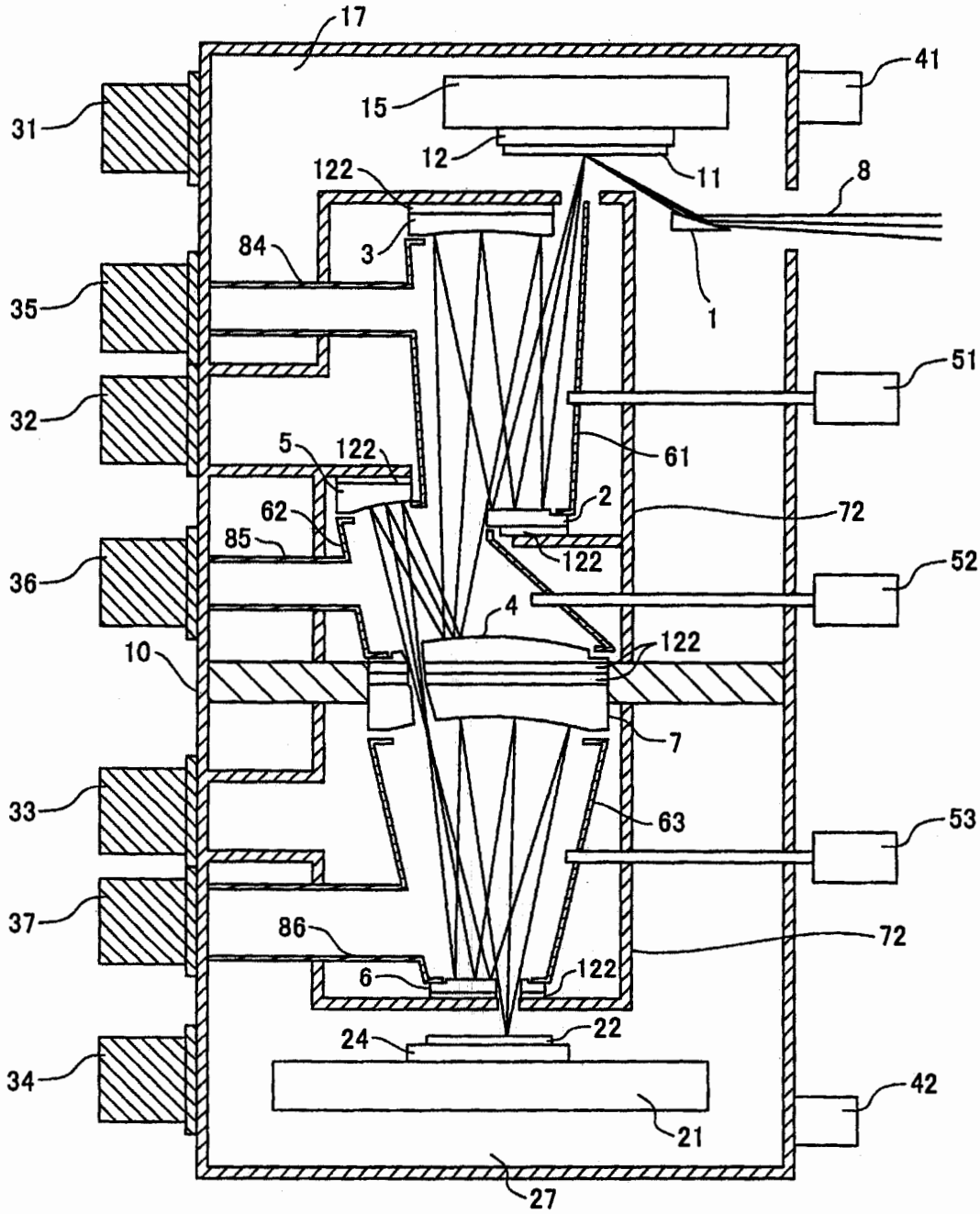
17
41
15
31
12
11
122
8
84
3
1
35
51
32
5
122
61
62
2
72
85
122
52
36
4
122
10
7
33
63
53
37
86
72
6
122
24
22
34
42
21
27

FIG. 3

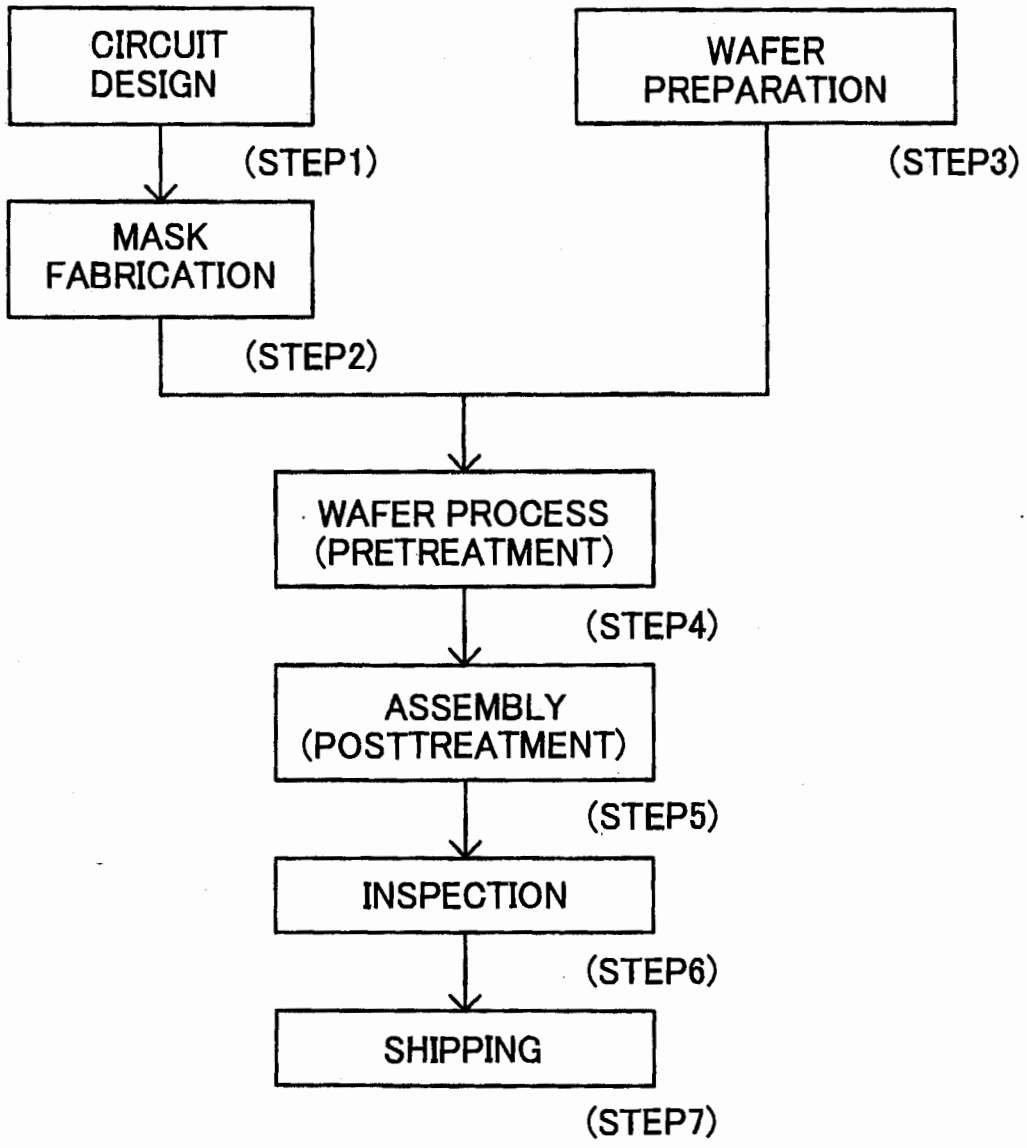
CIRCUIT DESIGN
(STEP1)
MASK FABRICATION
(STEP2)
WAFER PREPARATION
(STEP3)
WAFER PROCESS (PRETREATMENT)
(STEP4)
ASSEMBLY (POSTTREATMENT)
(STEP5)
INSPECTION
(STEP6)
SHIPPING
(STEP7)

FIG. 4

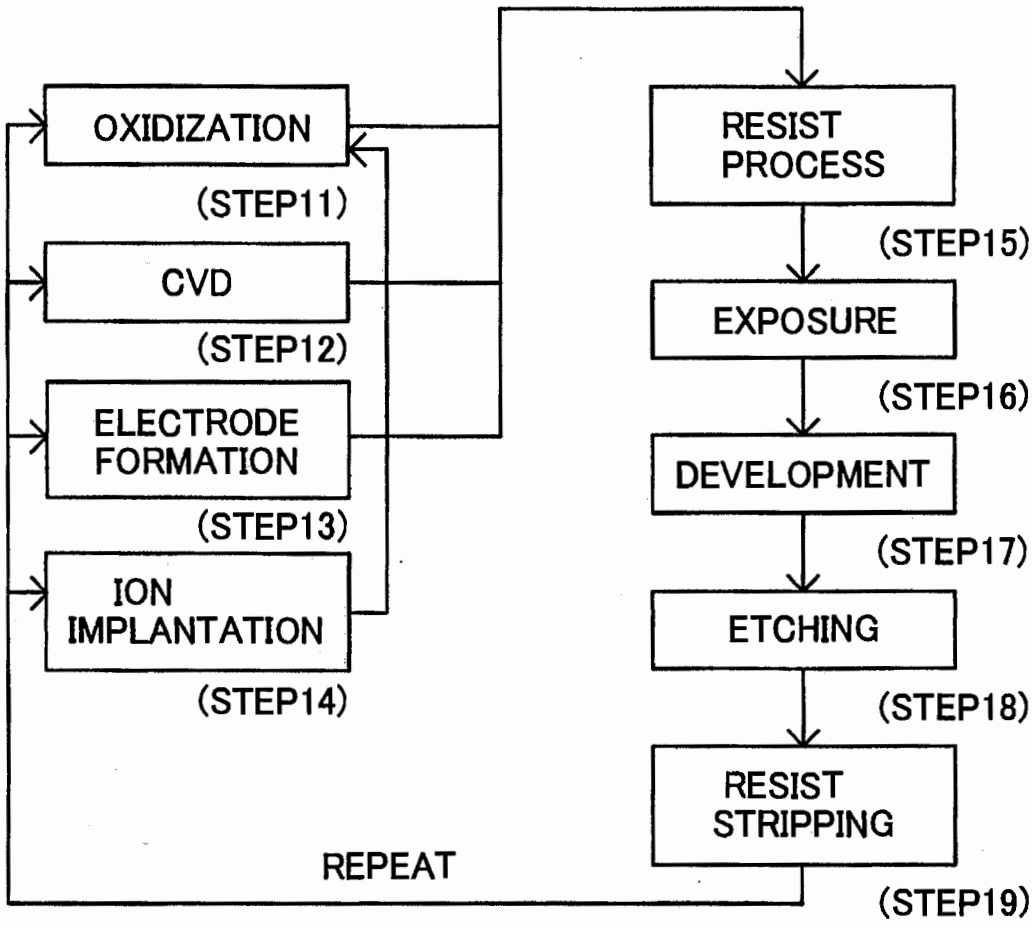
OXIDIZATION
(STEP11)
CVD
(STEP12)
ELECTRODE FORMATION
(STEP13)
ION IMPLANTATION
(STEP14)
REPEAT
RESIST PROCESS
(STEP15)
EXPOSURE
(STEP16)
DEVELOPMENT
(STEP17)
ETCHING
(STEP18)
RESIST STRIPPING
(STEP19)

FIG. 5