*FIG. 1*

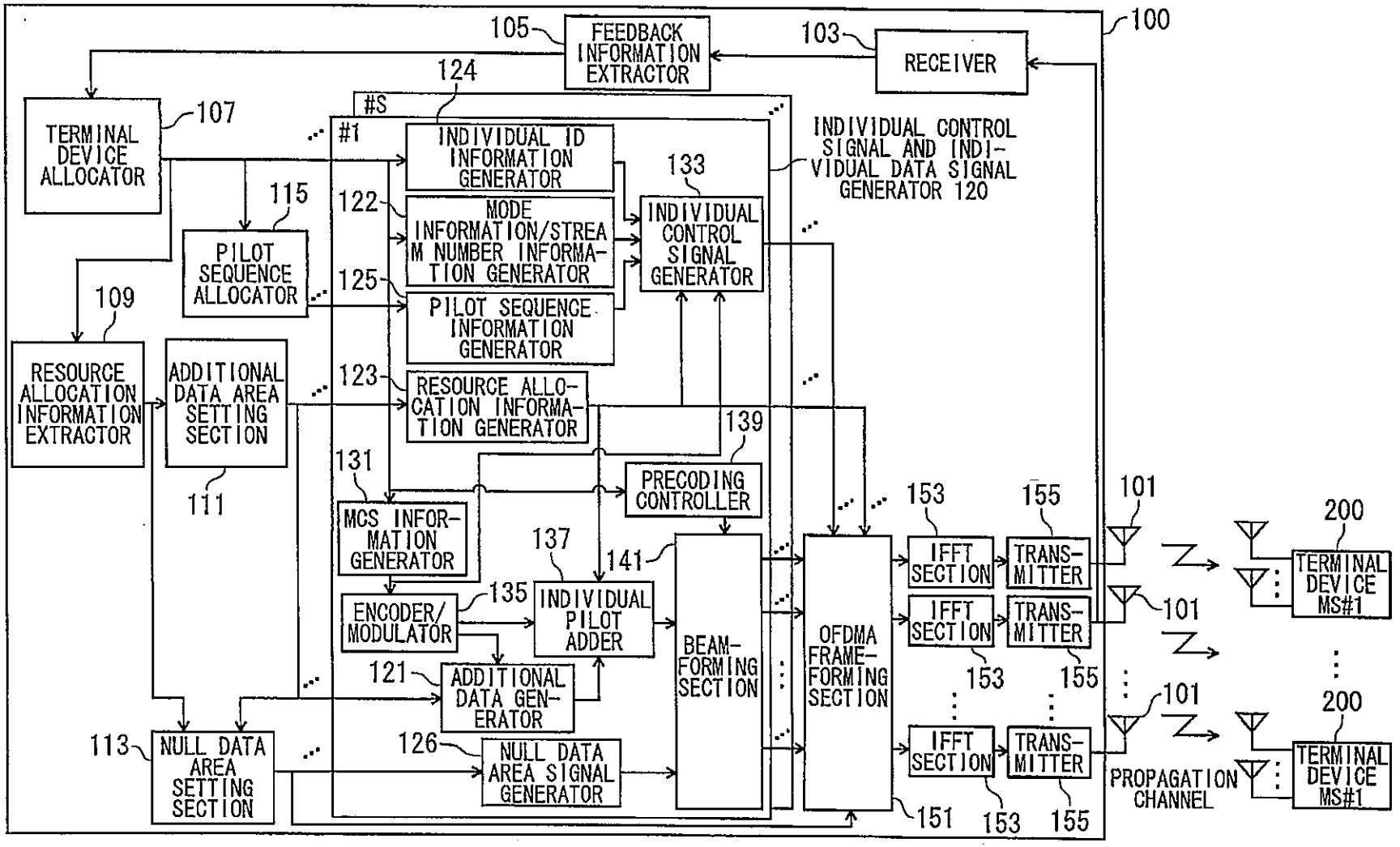
100
105
FEEDBACK INFORMATION EXTRACTOR
103
RECEIVER
124
#S
#1
107
TERMINAL DEVICE ALLOCATOR
INDIVIDUAL ID INFORMATION GENERATOR
INDIVIDUAL CONTROL SIGNAL AND INDIVIDUAL DATA SIGNAL GENERATOR 120
133
115
122
MODE INFORMATION/STREAM NUMBER INFORMATION GENERATOR
INDIVIDUAL CONTROL SIGNAL GENERATOR
PILOT SEQUENCE ALLOCATOR
125
PILOT SEQUENCE INFORMATION GENERATOR
109
RESOURCE ALLOCATION INFORMATION EXTRACTOR
ADDITIONAL DATA AREA SETTING SECTION
123
RESOURCE ALLOCATION INFORMATION GENERATOR
139
111
131
PRECODING CONTROLLER
153
155
101
MCS INFORMATION GENERATOR
137
141
IFFT SECTION
TRANSMITTER
200
TERMINAL DEVICE MS#1
135
INDIVIDUAL PILOT ADDER
ENCODER/MODULATOR
BEAM-FORMING SECTION
OFDMA FRAME-FORMING SECTION
121
ADDITIONAL DATA GENERATOR
113
NULL DATA AREA SETTING SECTION
126
NULL DATA AREA SIGNAL GENERATOR
PROPAGATION CHANNEL
151

FIG. 8

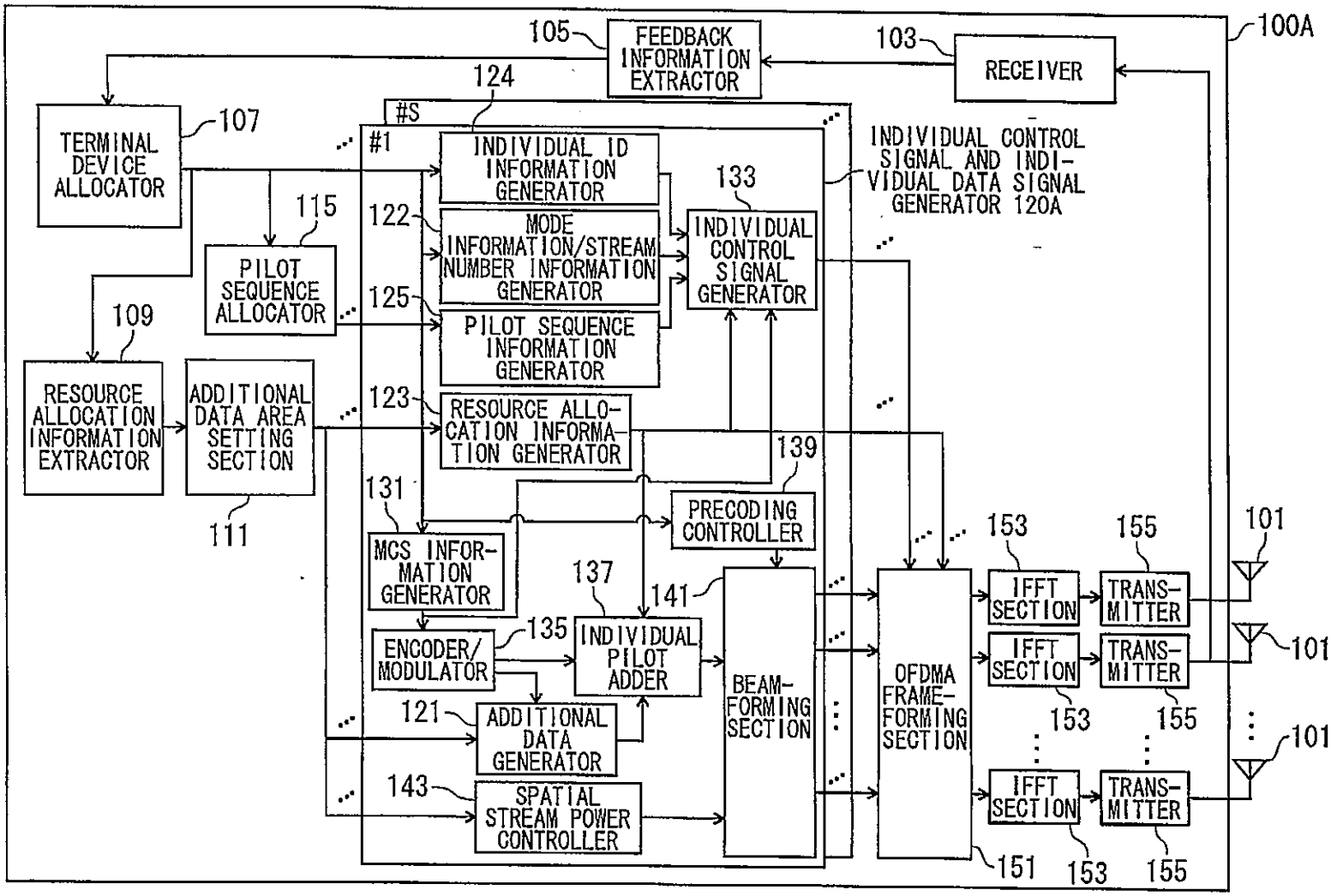
100A
105
FEEDBACK INFORMATION EXTRACTOR
103
RECEIVER
124
#S
#1
TERMINAL DEVICE ALLOCATOR
107
INDIVIDUAL ID INFORMATION GENERATOR
INDIVIDUAL CONTROL SIGNAL AND INDIVIDUAL DATA SIGNAL GENERATOR 120A
133
115
122
MODE INFORMATION/STREAM NUMBER INFORMATION GENERATOR
INDIVIDUAL CONTROL SIGNAL GENERATOR
PILOT SEQUENCE ALLOCATOR
125
PILOT SEQUENCE INFORMATION GENERATOR
109
RESOURCE ALLOCATION INFORMATION EXTRACTOR
ADDITIONAL DATA AREA SETTING SECTION
123
RESOURCE ALLOCATION INFORMATION GENERATOR
111
139
131
PRECODING CONTROLLER
153
155
101
MCS INFORMATION GENERATOR
137
141
IFFT SECTION
TRANSMITTER
ENCODER/MODULATOR
135
INDIVIDUAL PILOT ADDER
BEAM-FORMING SECTION
OFDMA FRAME-FORMING SECTION
121
ADDITIONAL DATA GENERATOR
143
SPATIAL STREAM POWER CONTROLLER
151

FIG. 12

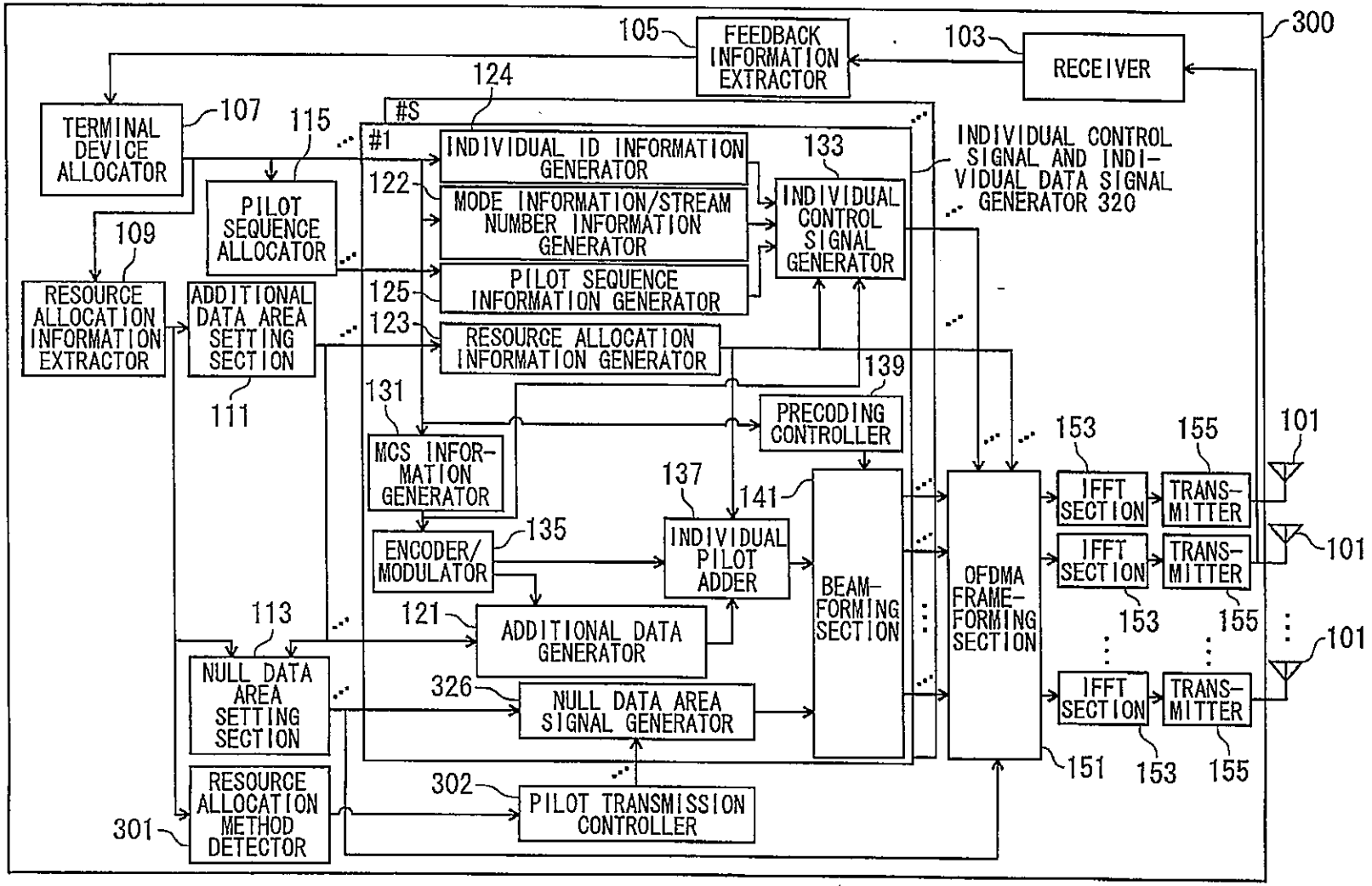
300
105
FEEDBACK INFORMATION EXTRACTOR
103
RECEIVER
124
#S
#1
TERMINAL DEVICE ALLOCATOR
107
115
PILOT SEQUENCE ALLOCATOR
INDIVIDUAL ID INFORMATION GENERATOR
133
INDIVIDUAL CONTROL SIGNAL AND INDIVIDUAL DATA SIGNAL GENERATOR 320
122
MODE INFORMATION/STREAM NUMBER INFORMATION GENERATOR
INDIVIDUAL CONTROL SIGNAL GENERATOR
109
RESOURCE ALLOCATION INFORMATION EXTRACTOR
ADDITIONAL DATA AREA SETTING SECTION
125
PILOT SEQUENCE INFORMATION GENERATOR
123
RESOURCE ALLOCATION INFORMATION GENERATOR
111
131
139
PRECODING CONTROLLER
MCS INFORMATION GENERATOR
137
141
153
155
101
IFFT SECTION
TRANSMITTER
135
ENCODER/MODULATOR
INDIVIDUAL PILOT ADDER
BEAMFORMING SECTION
OFDMA FRAME-FORMING SECTION
113
121
ADDITIONAL DATA GENERATOR
NULL DATA AREA SETTING SECTION
326
NULL DATA AREA SIGNAL GENERATOR
RESOURCE ALLOCATION METHOD DETECTOR
302
PILOT TRANSMISSION CONTROLLER
301
151

10/17

FIG. 14

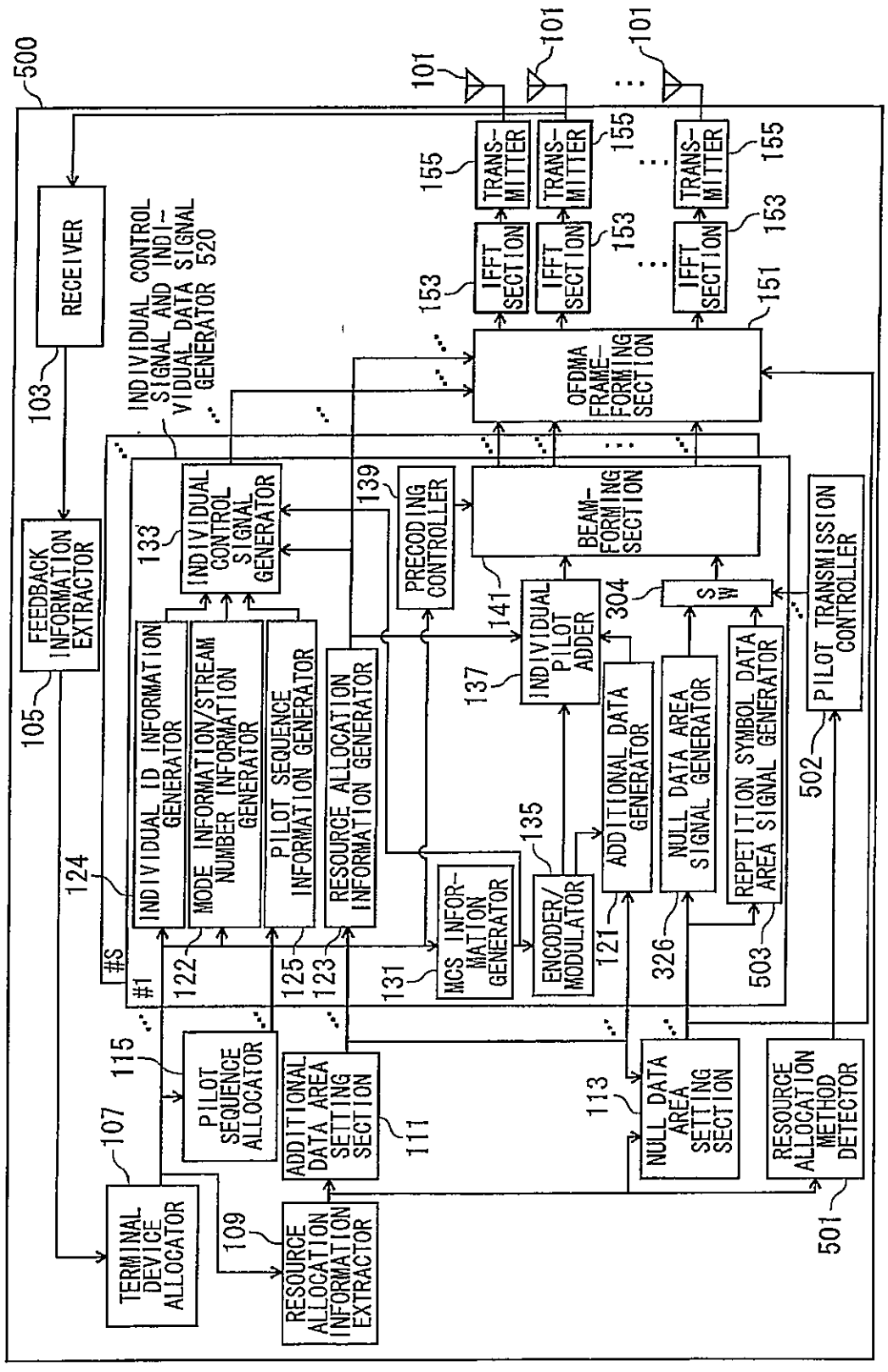
500
RECEIVER
103
FEEDBACK INFORMATION EXTRACTOR
105
INDIVIDUAL CONTROL SIGNAL AND INDIVIDUAL DATA SIGNAL GENERATOR 520
INDIVIDUAL CONTROL SIGNAL GENERATOR
133
INDIVIDUAL ID INFORMATION GENERATOR
MODE INFORMATION/STREAM NUMBER INFORMATION GENERATOR
PILOT SEQUENCE INFORMATION GENERATOR
RESOURCE ALLOCATION INFORMATION GENERATOR
PRECODING CONTROLLER
139
OFDMA FRAME-FORMING SECTION
BEAM-FORMING SECTION
141
INDIVIDUAL PILOT ADDER
137
304
S/W
IFFT SECTION
153
TRANS-MITTER
155
101
124
#S
#1
122
125
123
131
MCS INFOR-MATION GENERATOR
135
ENCODER/MODULATOR
121
ADDITIONAL DATA GENERATOR
NULL DATA AREA SIGNAL GENERATOR
326
REPETITION SYMBOL DATA AREA SIGNAL GENERATOR
503
151
PILOT TRANSMISSION CONTROLLER
502
TERMINAL DEVICE ALLOCATOR
107
RESOURCE ALLOCATION INFORMATION EXTRACTOR
109
PILOT SEQUENCE ALLOCATOR
115
ADDITIONAL DATA AREA SETTING SECTION
111
NULL DATA AREA SETTING SECTION
113
RESOURCE ALLOCATION METHOD DETECTOR
501

*FIG. 22*

INDIVIDUAL CONTROL INFORMATION FOR TERMINAL DEVICE MS#n (MAIN INFORMATION IS EXTRACTED):

RESOURCE ALLOCATION INFORMATION: RA#n [INCLUDING POSITION [start, end], ALLOCATION SIZE, DISTRIBUTED/CONTINUOUS ALLOCATIONS]
MCS INFORMATION: MCS#n [4 bits]
MIMO MODE INFORMATION: MEF [2 bits]
(INCLUDING FOLLOWING TWO INFORMATION IN MU-MIMO MODE)
PILOT SEQUENCE INFORMATION: PSI#n [1bit (if Nt=2), 2 bits (if Nt = 4 or 8)]
THE NUMBER OF SPATIAL STREAMS: Mt [1bit (if Nt=2), 2 bits (if Nt = 4 or 8)]
TERMINAL ADDRESS INFORMATION: MCRC#n [CRC masked by station ID]

Nt: THE NUMBER OF TRANSMISSION ANTENNAS (TRANSMITTED BY ANOTHER SHARED CONTROL CHANNEL)
MCRC: CRC MASKED BY OWN TERMINAL DEVICE ID. TERMINAL DETECTS INDIVIDUAL CONTROL INFORMATION ADDRESSED TO OWN TERMINAL DEVICE TOGETHER WITH ERROR DETECTION BY USING MCRC.

*FIG. 23*

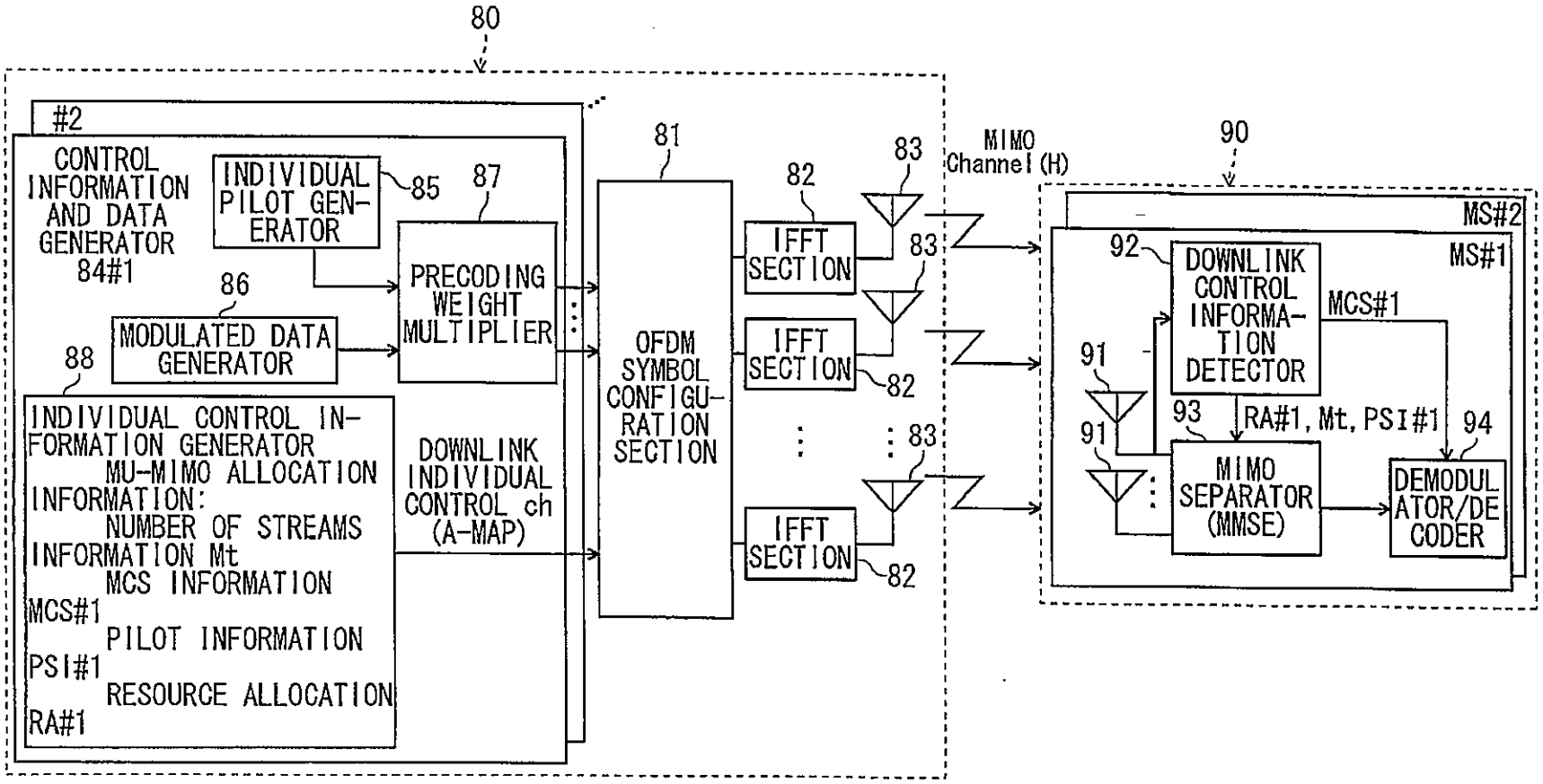
80
#2
CONTROL INFORMATION AND DATA GENERATOR 84#1
INDIVIDUAL PILOT GENERATOR
85
87
PRECODING WEIGHT MULTIPLIER
86
MODULATED DATA GENERATOR
88
INDIVIDUAL CONTROL INFORMATION GENERATOR
MU-MIMO ALLOCATION INFORMATION:
NUMBER OF STREAMS INFORMATION Mt
MCS INFORMATION MCS#1
PILOT INFORMATION PSI#1
RESOURCE ALLOCATION RA#1
DOWNLINK INDIVIDUAL CONTROL ch (A-MAP)
81
OFDM SYMBOL CONFIGURATION SECTION
82
IFFT SECTION
83
MIMO Channel (H)
90
MS#2
MS#1
92
DOWNLINK CONTROL INFORMATION DETECTOR
MCS#1
91
93
RA#1, Mt, PSI#1
94
MIMO SEPARATOR (MMSE)
DEMODULATOR/DECODER

FIG. 1

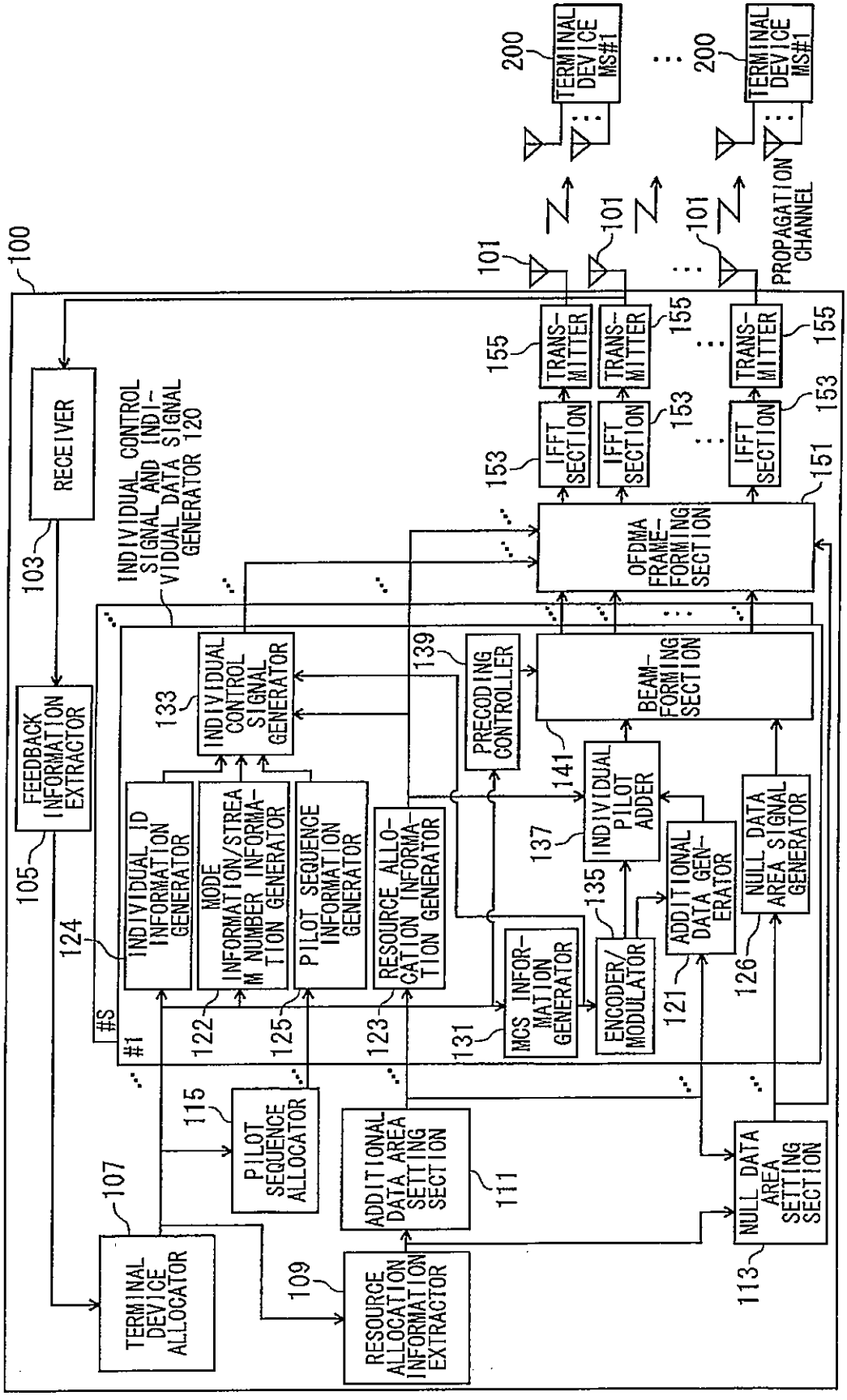
100
RECEIVER
103
FEEDBACK INFORMATION EXTRACTOR
105
INDIVIDUAL CONTROL SIGNAL AND INDIVIDUAL DATA SIGNAL GENERATOR 120
INDIVIDUAL CONTROL SIGNAL GENERATOR
133
INDIVIDUAL ID INFORMATION GENERATOR
MODE INFORMATION/STREAM NUMBER INFORMATION GENERATOR
PILOT SEQUENCE INFORMATION GENERATOR
RESOURCE ALLOCATION INFORMATION GENERATOR
124
122
125
123
#1
#S
PRECODING CONTROLLER
139
MCS INFORMATION GENERATOR
131
ENCODER/MODULATOR
135
INDIVIDUAL PILOT ADDER
137
ADDITIONAL DATA GENERATOR
121
NULL DATA AREA SIGNAL GENERATOR
126
BEAM-FORMING SECTION
141
OFDMA FRAME-FORMING SECTION
151
IFFT SECTION
153
TRANSMITTER
155
101
PROPAGATION CHANNEL
200
TERMINAL DEVICE MS#1
TERMINAL DEVICE ALLOCATOR
107
RESOURCE ALLOCATION INFORMATION EXTRACTOR
109
PILOT SEQUENCE ALLOCATOR
115
ADDITIONAL DATA AREA SETTING SECTION
111
NULL DATA AREA SETTING SECTION
113

FIG. 8

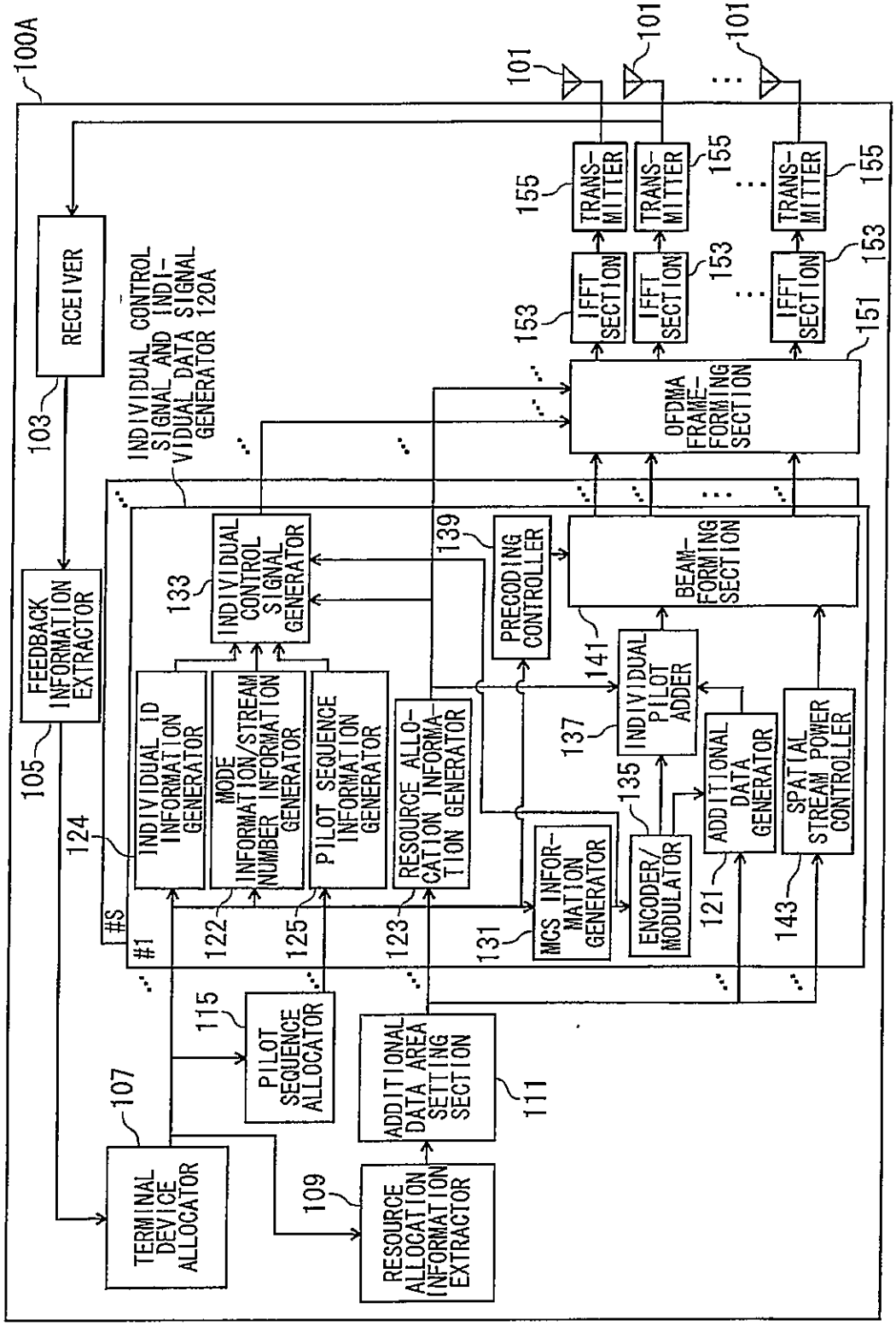
100A
RECEIVER
103
FEEDBACK INFORMATION EXTRACTOR
105
INDIVIDUAL CONTROL SIGNAL AND INDIVIDUAL DATA SIGNAL GENERATOR 120A
INDIVIDUAL CONTROL SIGNAL GENERATOR
133
PRECODING CONTROLLER
139
BEAM-FORMING SECTION
OFDMA FRAME-FORMING SECTION
151
IFFT SECTION
153
TRANS-MITTER
155
101
INDIVIDUAL ID INFORMATION GENERATOR
MODE INFORMATION/STREAM NUMBER INFORMATION GENERATOR
PILOT SEQUENCE INFORMATION GENERATOR
RESOURCE ALLOCATION INFORMATION GENERATOR
MCS INFORMATION GENERATOR
131
ENCODER/MODULATOR
135
INDIVIDUAL PILOT ADDER
137
141
ADDITIONAL DATA GENERATOR
121
SPATIAL STREAM POWER CONTROLLER
143
#1
#S
122
125
123
124
PILOT SEQUENCE ALLOCATOR
115
ADDITIONAL DATA AREA SETTING SECTION
111
TERMINAL DEVICE ALLOCATOR
107
RESOURCE ALLOCATION INFORMATION EXTRACTOR
109

FIG. 12

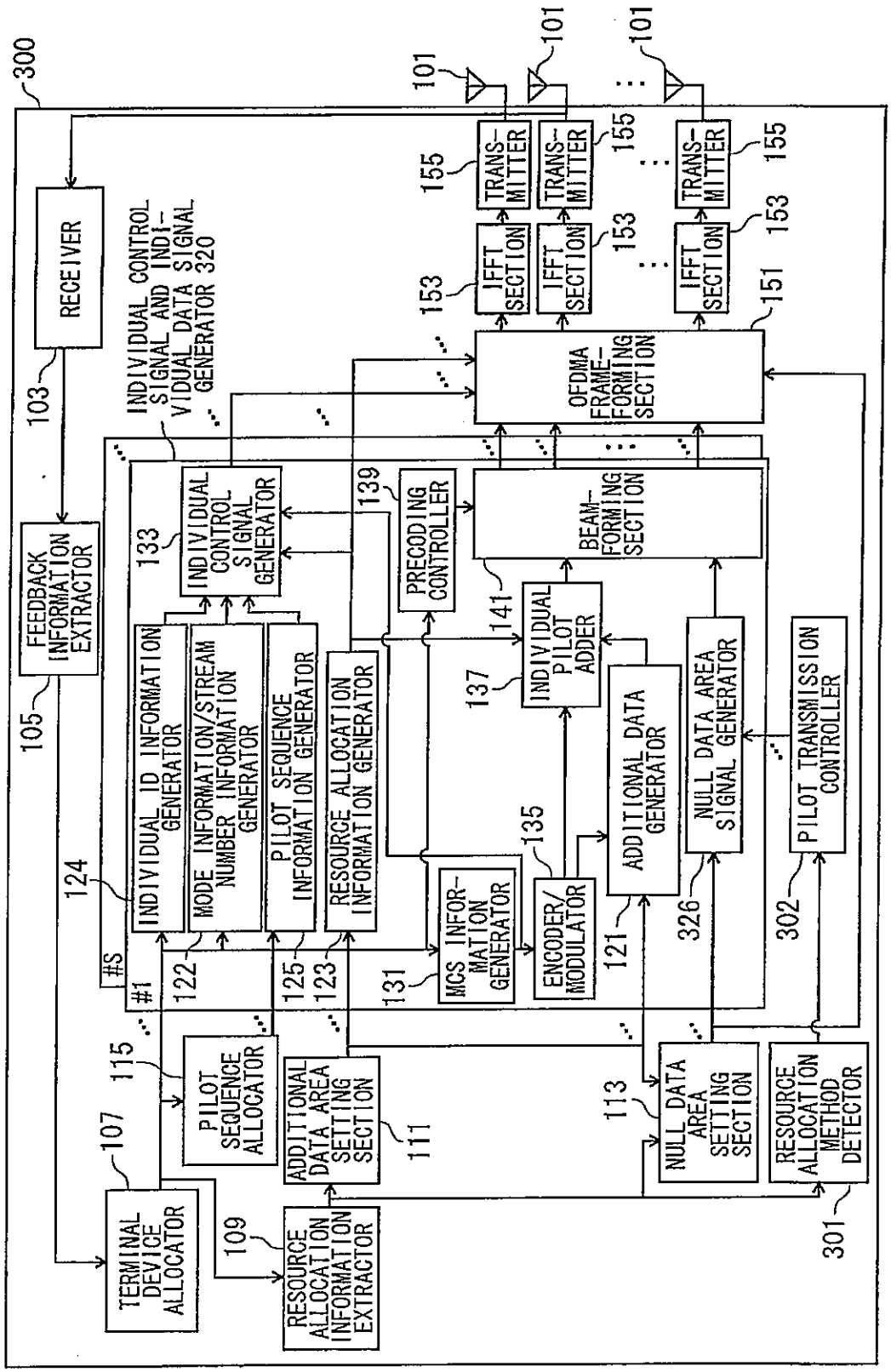
300
RECEIVER
103
FEEDBACK INFORMATION EXTRACTOR
105
TERMINAL DEVICE ALLOCATOR
107
RESOURCE ALLOCATION INFORMATION EXTRACTOR
109
INDIVIDUAL CONTROL SIGNAL AND INDIVIDUAL DATA SIGNAL GENERATOR 320
INDIVIDUAL ID INFORMATION GENERATOR
MODE INFORMATION/STREAM NUMBER INFORMATION GENERATOR
PILOT SEQUENCE INFORMATION GENERATOR
RESOURCE ALLOCATION INFORMATION GENERATOR
INDIVIDUAL CONTROL SIGNAL GENERATOR
133
PRECODING CONTROLLER
139
#S
#1
122
125
123
124
PILOT SEQUENCE ALLOCATOR
115
ADDITIONAL DATA AREA SETTING SECTION
111
MCS INFORMATION GENERATOR
131
ENCODER/MODULATOR
135
INDIVIDUAL PILOT ADDER
137
141
ADDITIONAL DATA GENERATOR
121
NULL DATA AREA SETTING SECTION
113
NULL DATA AREA SIGNAL GENERATOR
326
PILOT TRANSMISSION CONTROLLER
302
RESOURCE ALLOCATION METHOD DETECTOR
301
BEAM-FORMING SECTION
OFDMA FRAME-FORMING SECTION
151
IFFT SECTION
153
TRANSMITTER
155
101

FIG. 14

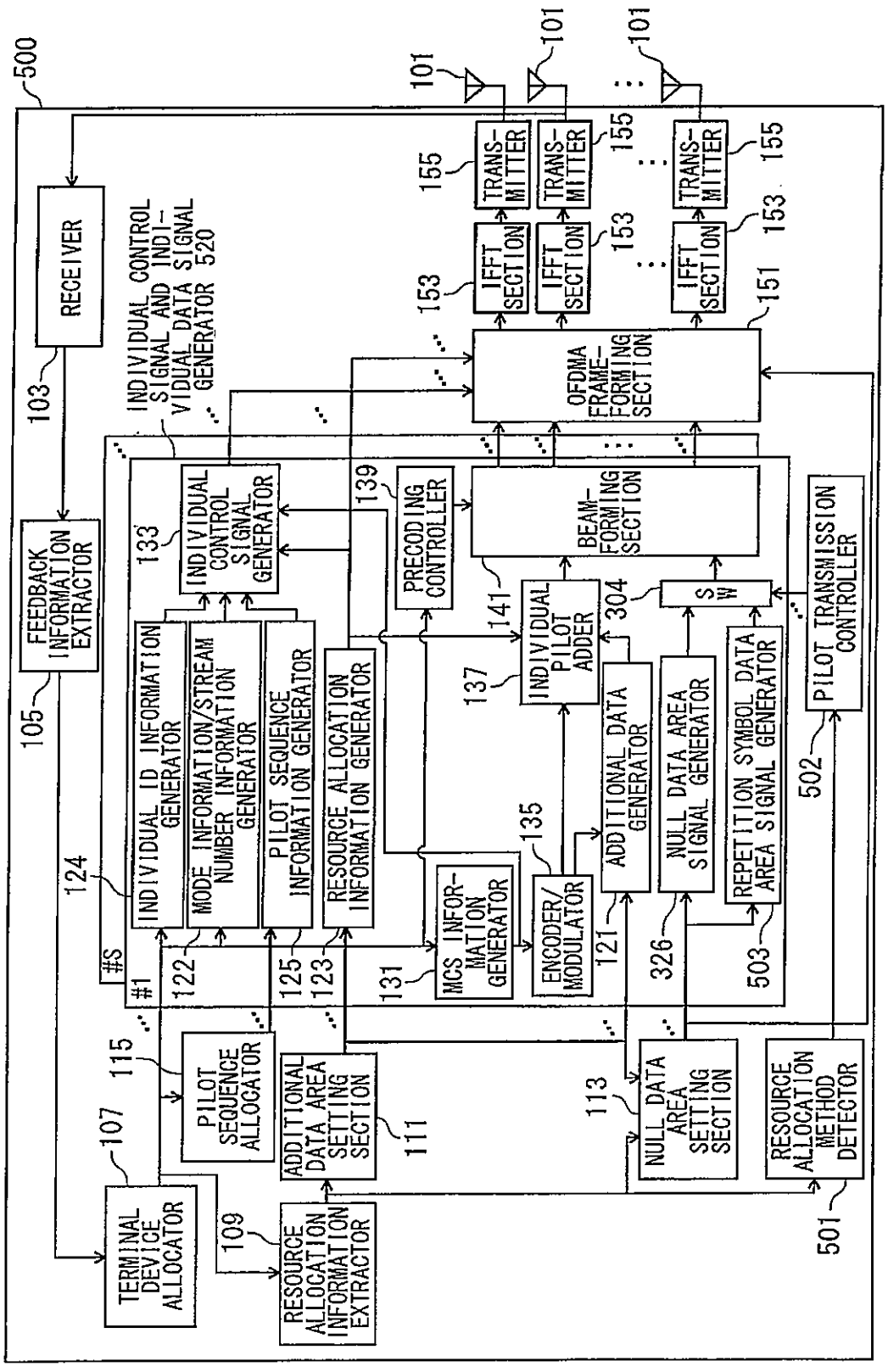
500
RECEIVER
103
FEEDBACK INFORMATION EXTRACTOR
105
TERMINAL DEVICE ALLOCATOR
107
RESOURCE ALLOCATION INFORMATION EXTRACTOR
109
PILOT SEQUENCE ALLOCATOR
115
ADDITIONAL DATA AREA SETTING SECTION
111
NULL DATA AREA SETTING SECTION
113
RESOURCE ALLOCATION METHOD DETECTOR
501
PILOT TRANSMISSION CONTROLLER
502
INDIVIDUAL CONTROL SIGNAL AND INDIVIDUAL DATA SIGNAL GENERATOR 520
INDIVIDUAL CONTROL SIGNAL GENERATOR
133
INDIVIDUAL ID INFORMATION GENERATOR
MODE INFORMATION/STREAM NUMBER INFORMATION GENERATOR
PILOT SEQUENCE INFORMATION GENERATOR
RESOURCE ALLOCATION INFORMATION GENERATOR
PRECODING CONTROLLER
139
MCS INFORMATION GENERATOR
131
ENCODER/MODULATOR
135
ADDITIONAL DATA GENERATOR
121
NULL DATA AREA SIGNAL GENERATOR
REPETITION SYMBOL DATA AREA SIGNAL GENERATOR
503
INDIVIDUAL PILOT ADDER
137
141
304
S/W
326
BEAM-FORMING SECTION
OFDMA FRAME-FORMING SECTION
151
IFFT SECTION
153
TRANSMITTER
155
101
#1
#S
122
125
123
124

*FIG. 22*

INDIVIDUAL CONTROL INFORMATION FOR TERMINAL DEVICE MS#n (MAIN INFORMATION IS EXTRACTED):

RESOURCE ALLOCATION INFORMATION: RA#n [INCLUDING POSITION [start, end], ALLOCATION SIZE, DISTRIBUTED/CONTINUOUS ALLOCATIONS]
MCS INFORMATION: MCS#n [4 bits]
MIMO MODE INFORMATION: MEF [2 bits]
(INCLUDING FOLLOWING TWO INFORMATION IN MU-MIMO MODE)
PILOT SEQUENCE INFORMATION: PSI#n [1bit (if Nt=2), 2 bits (if Nt = 4 or 8)]
THE NUMBER OF SPATIAL STREAMS: Mt [1bit (if Nt=2), 2 bits (if Nt = 4 or 8)]
TERMINAL ADDRESS INFORMATION: MCRC#n [CRC masked by station ID]

Nt: THE NUMBER OF TRANSMISSION ANTENNAS (TRANSMITTED BY ANOTHER SHARED CONTROL CHANNEL)
MCRC: CRC MASKED BY OWN TERMINAL DEVICE ID. TERMINAL DETECTS INDIVIDUAL CONTROL INFORMATION ADDRESSED TO OWN TERMINAL DEVICE TOGETHER WITH ERROR DETECTION BY USING MCRC.

FIG. 23

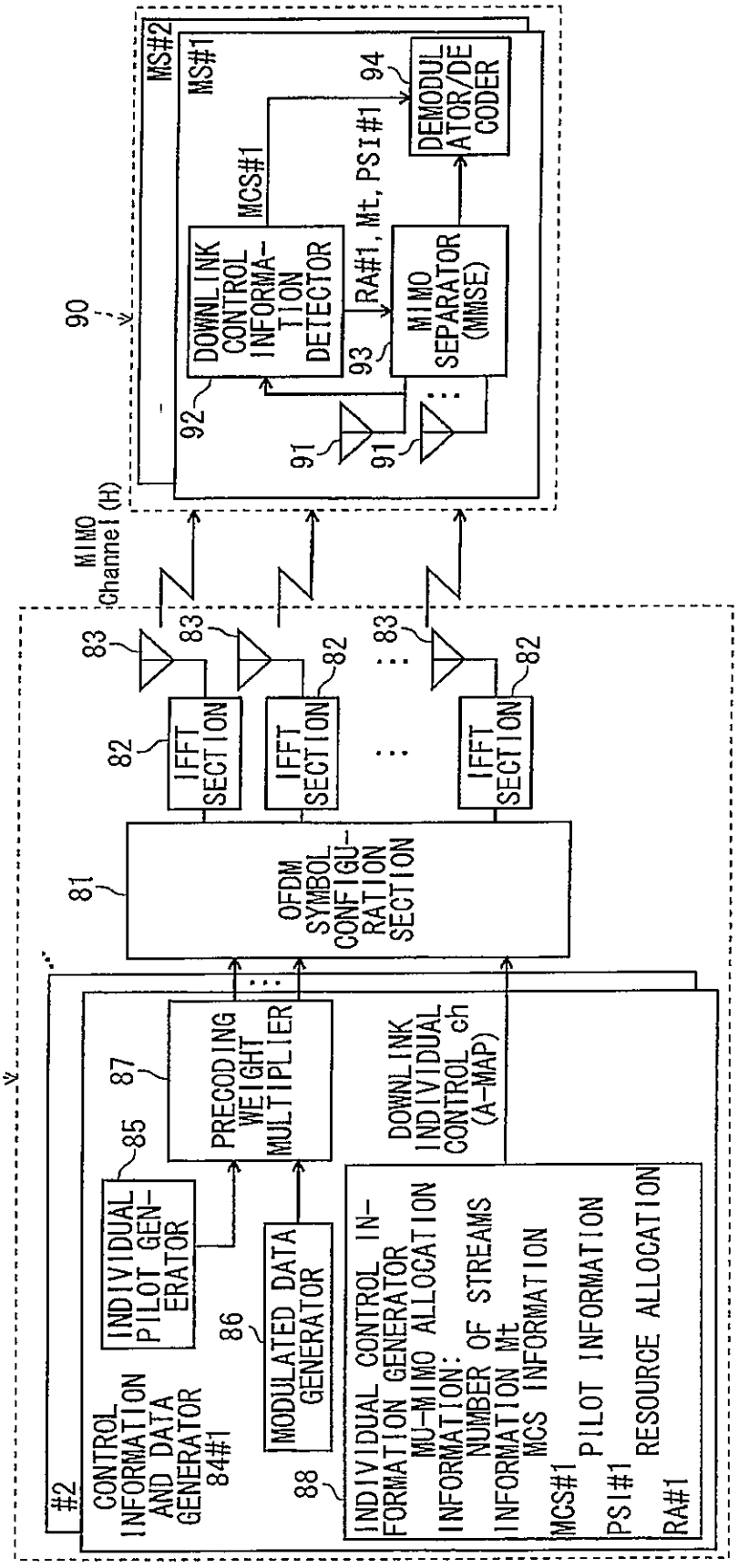
80
#2
CONTROL INFORMATION AND DATA GENERATOR 84#1
INDIVIDUAL PILOT GENERATOR
85
MODULATED DATA GENERATOR
86
PRECODING WEIGHT MULTIPLIER
87
INDIVIDUAL CONTROL INFORMATION GENERATOR
MU-MIMO ALLOCATION INFORMATION:
NUMBER OF STREAMS
INFORMATION Mt
MCS INFORMATION
MCS#1
PILOT INFORMATION
PSI#1
RESOURCE ALLOCATION
RA#1
88
DOWNLINK INDIVIDUAL CONTROL ch (A-MAP)
OFDM SYMBOL CONFIGURATION SECTION
81
IFFT SECTION
82
83
MIMO Channel (H)
90
MS#2
MS#1
DOWNLINK CONTROL INFORMATION DETECTOR
92
MCS#1
RA#1, Mt, PSI#1
93
MIMO SEPARATOR (MMSE)
91
DEMODULATOR/DECODER
94