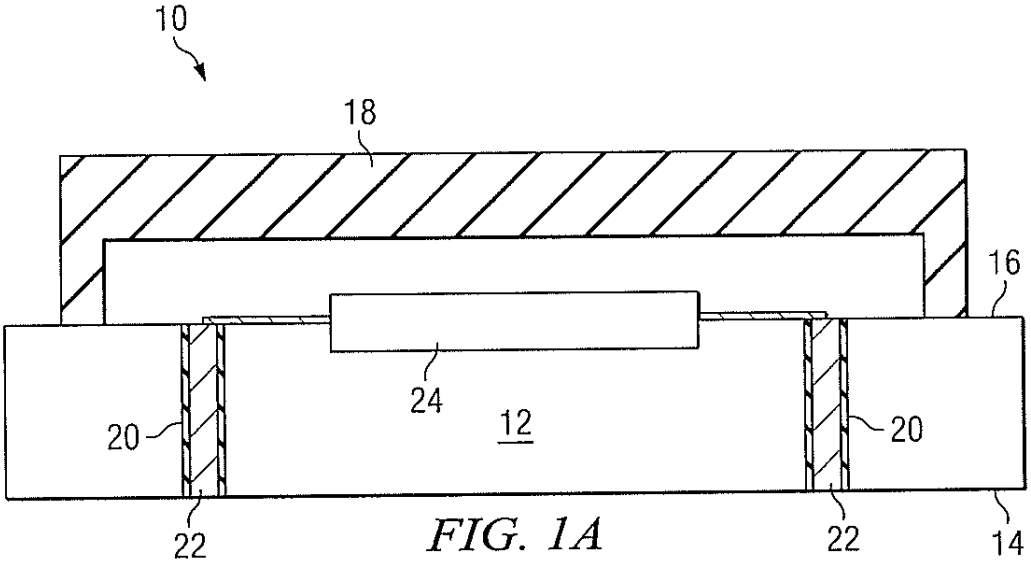


FIG. 1A

(PRIOR ART)

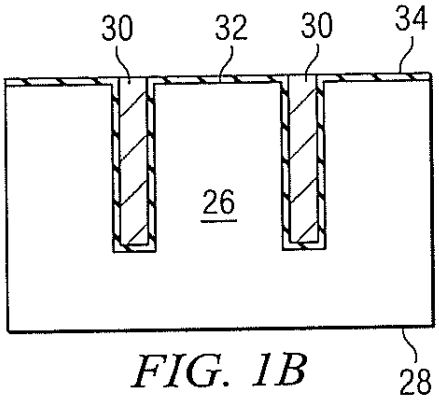


FIG. 1B

(PRIOR ART)

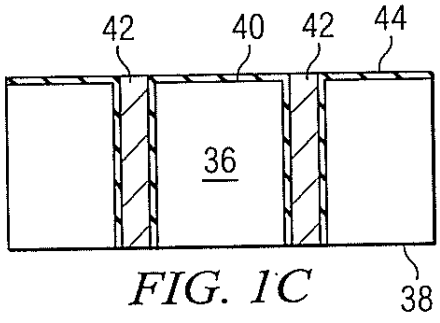


FIG. 1C

(PRIOR ART)