(12) INTERNATIONAL APPLICATION PUBLISHED UNDER THE PATENT COOPERATION TREATY (PCT)

(19) World Intellectual Property Organization
International Bureau

(43) International Publication Date
12 July 2007 (12.07.2007)

PCT

(10) International Publication Number
WO 2007/079036 A2

(51) International Patent Classification:
B08B 3/00 (2006.01)

(21) International Application Number:
PCT/US2006/049109

(22) International Filing Date:
21 December 2006 (21.12.2006)

(25) Filing Language: English

(26) Publication Language: English

(30) Priority Data:

60/755,377	30 December 2005 (30.12.2005)	US
11/612,371	18 December 2006 (18.12.2006)	US

(71) Applicant *(for all designated States except US)*: **LAM RESEARCH CORPORATION** [US/US]; 4650 Cushing Parkway, Fremont, CA 94538 (US).

(72) Inventors; and

(75) Inventors/Applicants *(for US only)*: **FREER, Erik, M.** [US/US]; 347 W. Rincon Avenue, #A, Campbell, CA 95008 (US). **DE LARIOS, John, M.** [US/US]; 941 Loma Verde, Palo Alto, CA 94303 (US). **MIKHAYLICHENKO, Katrina** [RU/US]; 1818 Fumia Place, San Jose, CA 95151 (US). **RAVKIN, Michael** [US/US]; 1215 Knickerbocker Drive, Sunnyvale, CA 94087 (US). **KOROLIK, Mikhail** [RU/US]; 1818 Fumia Place, San Jose, CA 95151 (US). **REDEKER, Fred, C.** [US/US]; 1801 Sioux Drive, Fremont, CA 94539 (US).

(74) Agents: **GENCARELLA, Michael, L.** et al.; MARTINE PENILLA & GENCARELLA, LLP, 710 Lakeway Drive, Suite 200, Sunnyvale, CA 94085 (US).

(81) Designated States *(unless otherwise indicated, for every kind of national protection available)*: AE, AG, AL, AM, AT, AU, AZ, BA, BB, BG, BR, BW, BY, BZ, CA, CH, CN, CO, CR, CU, CZ, DE, DK, DM, DZ, EC, EE, EG, ES, FI, GB, GD, GE, GH, GM, GT, HN, HR, HU, ID, IL, IN, IS, JP, KE, KG, KM, KN, KP, KR, KZ, LA, LC, LK, LR, LS, LT, LU, LV, LY, MA, MD, MG, MK, MN, MW, MX, MY, MZ, NA, NG, NI, NO, NZ, OM, PG, PH, PL, PT, RO, RS, RU, SC, SD, SE, SG, SK, SL, SM, SV, SY, TJ, TM, TN, TR, TT, TZ, UA, UG, US, UZ, VC, VN, ZA, ZM, ZW.

(84) Designated States *(unless otherwise indicated, for every kind of regional protection available)*: ARIPO (BW, GH, GM, KE, LS, MW, MZ, NA, SD, SL, SZ, TZ, UG, ZM, ZW), Eurasian (AM, AZ, BY, KG, KZ, MD, RU, TJ, TM), European (AT, BE, BG, CH, CY, CZ, DE, DK, EE, ES, FI, FR, GB, GR, HU, IE, IS, IT, LT, LU, LV, MC, NL, PL, PT, RO, SE, SI, SK, TR), OAPI (BF, BJ, CF, CG, CI, CM, GA, GN, GQ, GW, ML, MR, NE, SN, TD, TG).

Published:

— *without international search report and to be republished upon receipt of that report*

For two-letter codes and other abbreviations, refer to the "Guidance Notes on Codes and Abbreviations" appearing at the beginning of each regular issue of the PCT Gazette.

(54) **Title:** METHOD AND APPARATUS FOR CLEANING A SEMICONDUCTOR SUBSTRATE

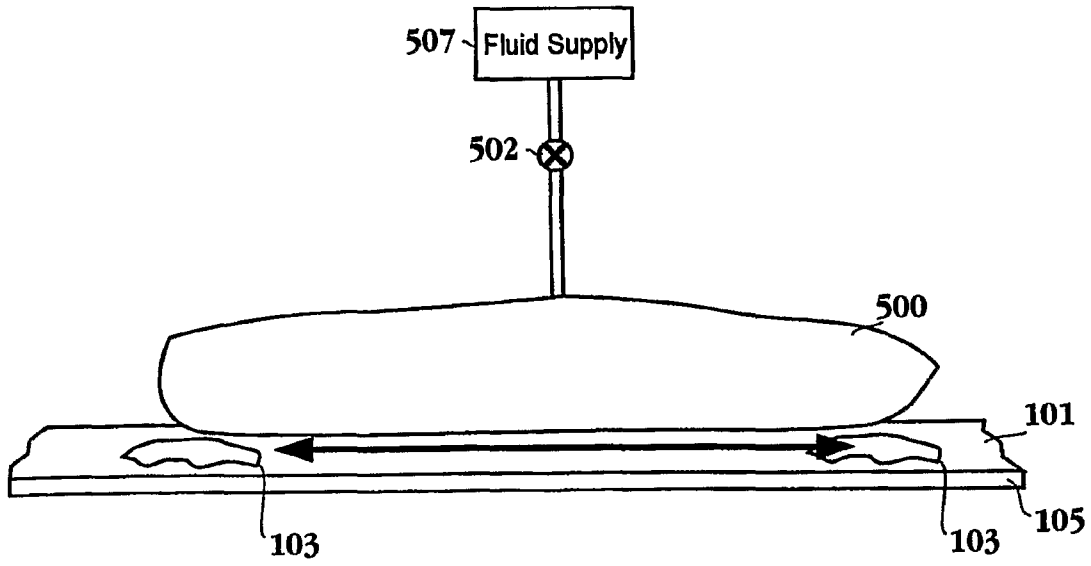

(57) **Abstract:** A method for cleaning a substrate is provided. The method initiates with disposing a fluid layer having solid components therein to a surface of the substrate. A shear force directed substantially parallel to the surface of the substrate and toward an outer edge of the substrate is then created. The shear force may result from a normal or tangential component of a force applied to a solid body in contact with the fluid layer in one embodiment. The surface of the substrate is rinsed to remove the fluid layer. A cleaning system and apparatus are also provided.

WO 2007/079036 A2