Figure 3A

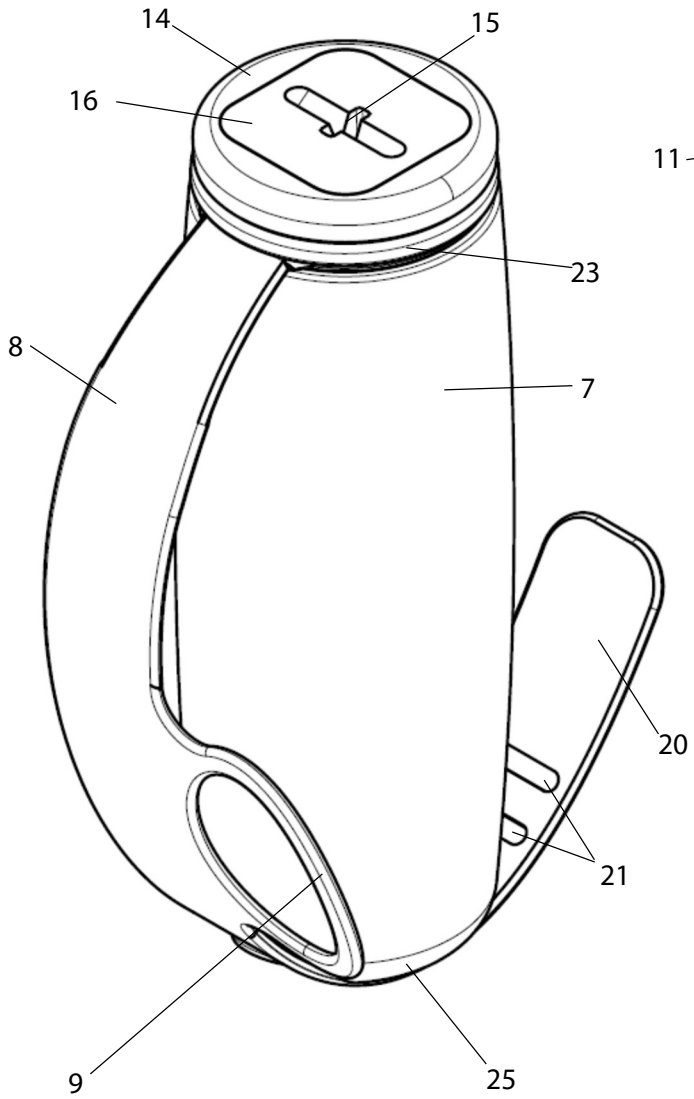

Figure 3B

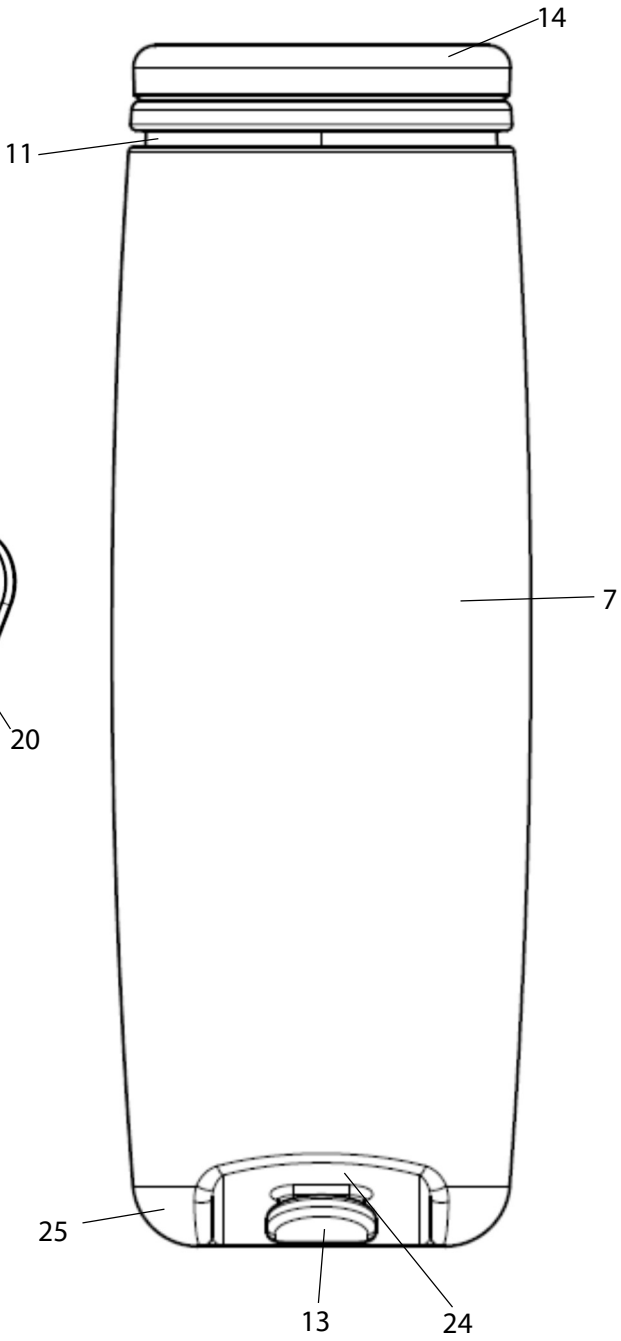

V

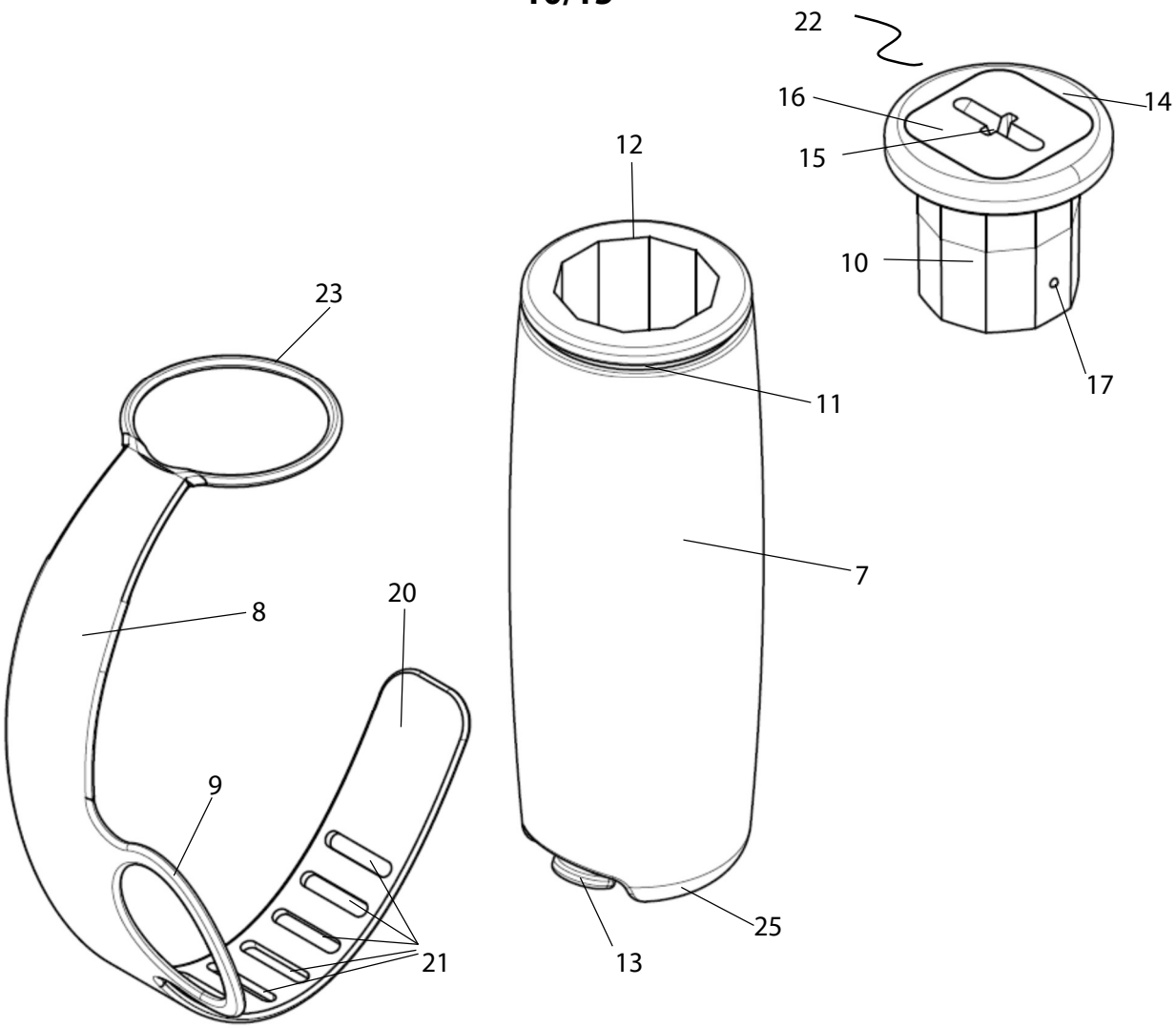

Figure 3C

Figure 3D

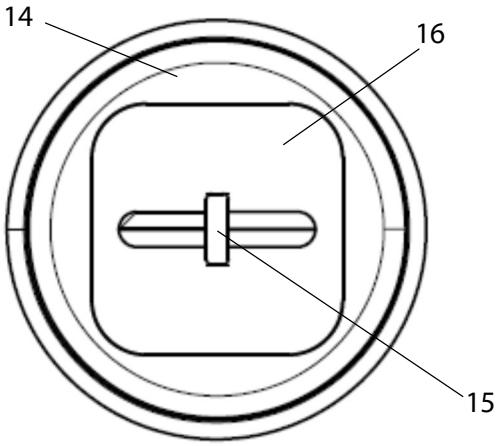

Figure 3E

