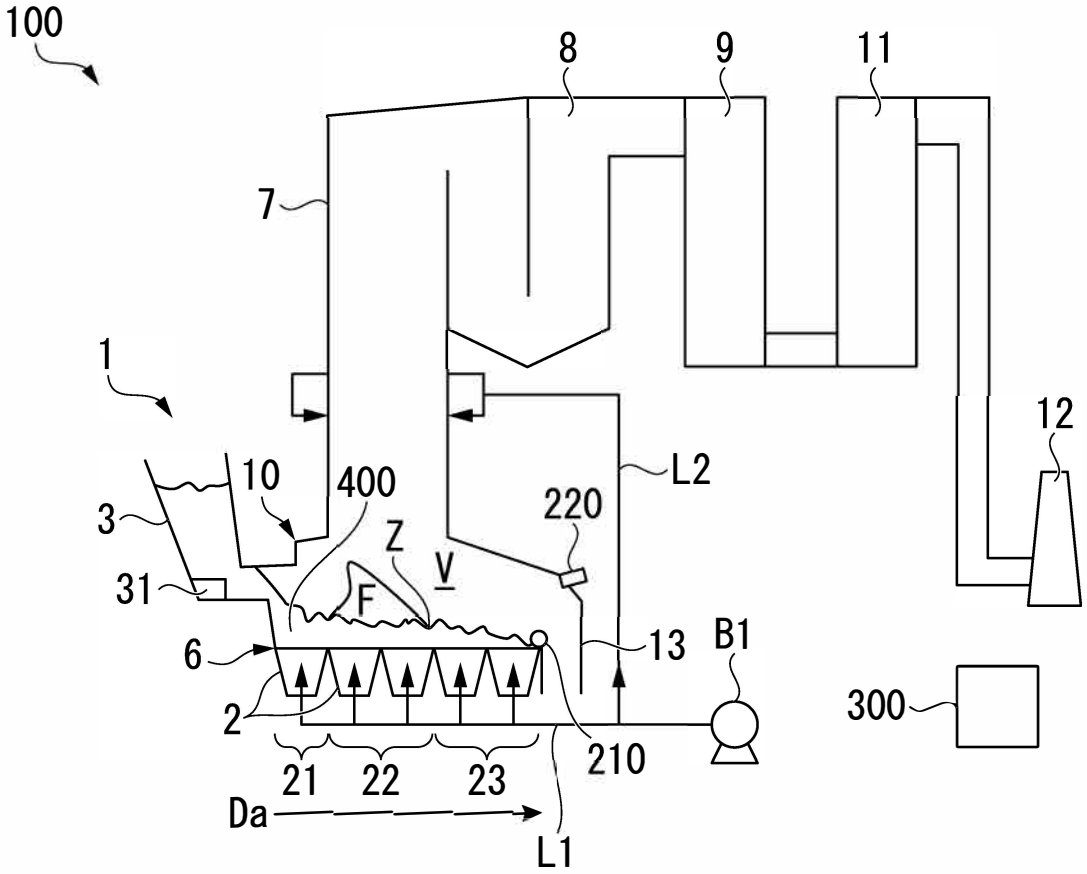
100
8
9
11
7
1
12
10
400
L2
3
220
Z
V
31
F
6
13
B1
300
2
210
21
22
23
Da
L1

FIG. 1

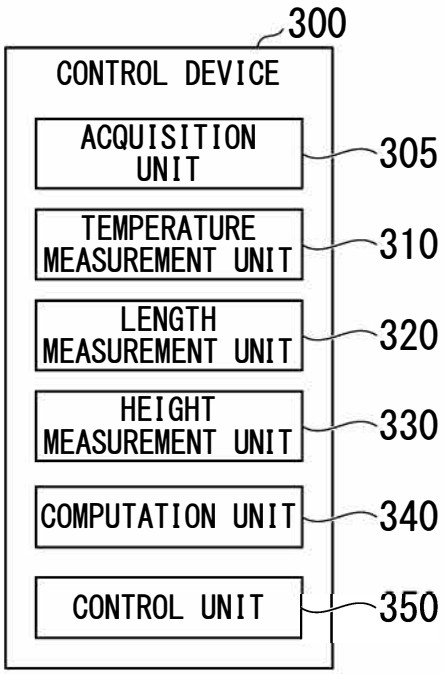
300
CONTROL DEVICE
ACQUISITION UNIT
305
TEMPERATURE MEASUREMENT UNIT
310
LENGTH MEASUREMENT UNIT
320
HEIGHT MEASUREMENT UNIT
330
COMPUTATION UNIT
340
CONTROL UNIT
350

FIG. 2

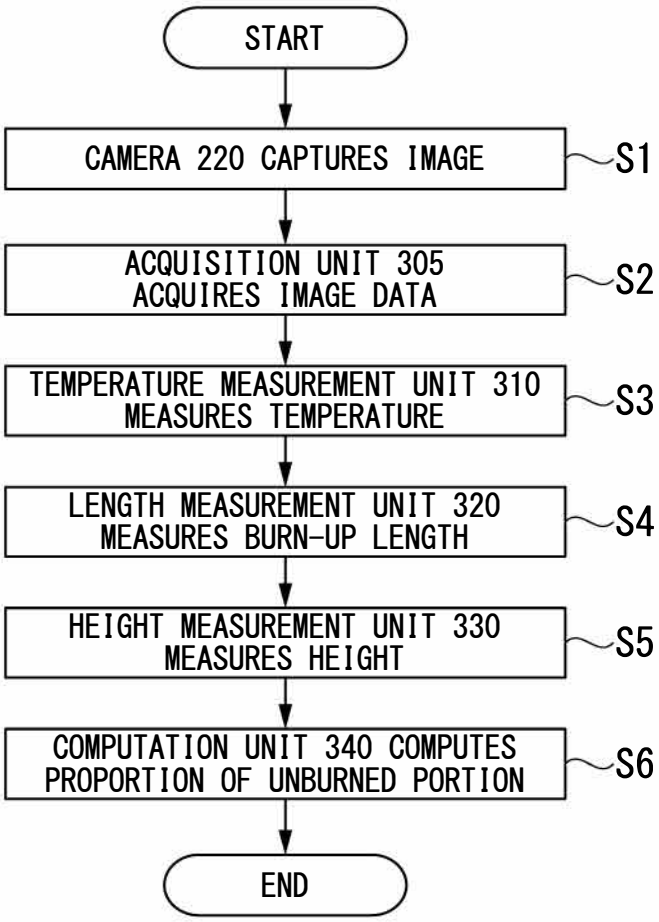
START
CAMERA 220 CAPTURES IMAGE
S1
ACQUISITION UNIT 305
ACQUIRES IMAGE DATA
S2
TEMPERATURE MEASUREMENT UNIT 310
MEASURES TEMPERATURE
S3
LENGTH MEASUREMENT UNIT 320
MEASURES BURN-UP LENGTH
S4
HEIGHT MEASUREMENT UNIT 330
MEASURES HEIGHT
S5
COMPUTATION UNIT 340 COMPUTES
PROPORTION OF UNBURNED PORTION
S6
END

FIG. 3

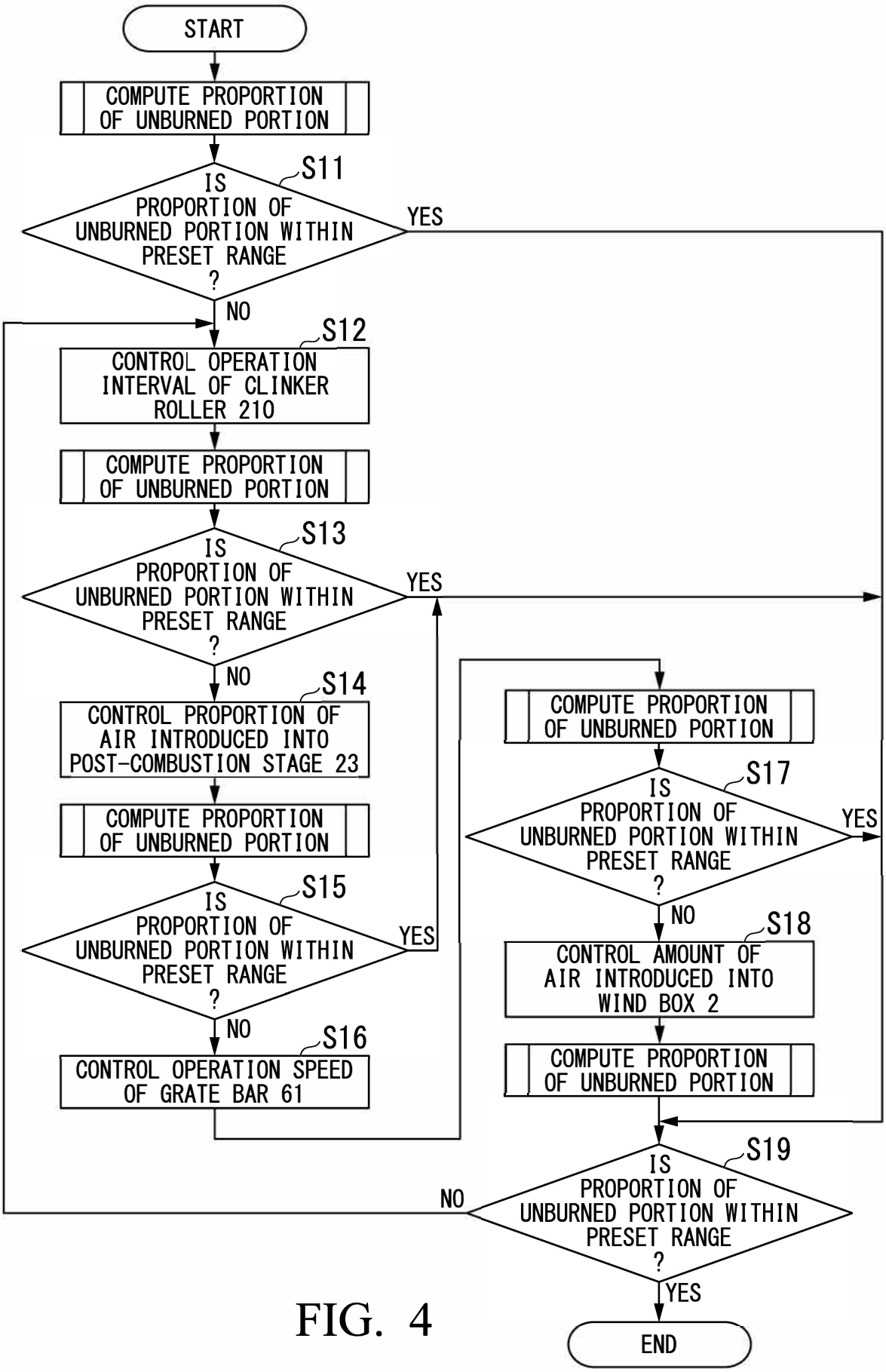
START
COMPUTE PROPORTION OF UNBURNED PORTION
S11
IS PROPORTION OF UNBURNED PORTION WITHIN PRESET RANGE ?
YES
NO
S12
CONTROL OPERATION INTERVAL OF CLINKER ROLLER 210
COMPUTE PROPORTION OF UNBURNED PORTION
S13
IS PROPORTION OF UNBURNED PORTION WITHIN PRESET RANGE ?
YES
NO
S14
CONTROL PROPORTION OF AIR INTRODUCED INTO POST-COMBUSTION STAGE 23
COMPUTE PROPORTION OF UNBURNED PORTION
S15
IS PROPORTION OF UNBURNED PORTION WITHIN PRESET RANGE ?
YES
NO
S16
CONTROL OPERATION SPEED OF GRATE BAR 61
COMPUTE PROPORTION OF UNBURNED PORTION
S17
IS PROPORTION OF UNBURNED PORTION WITHIN PRESET RANGE ?
YES
NO
S18
CONTROL AMOUNT OF AIR INTRODUCED INTO WIND BOX 2
COMPUTE PROPORTION OF UNBURNED PORTION
S19
IS PROPORTION OF UNBURNED PORTION WITHIN PRESET RANGE ?
NO
YES
END

FIG. 4

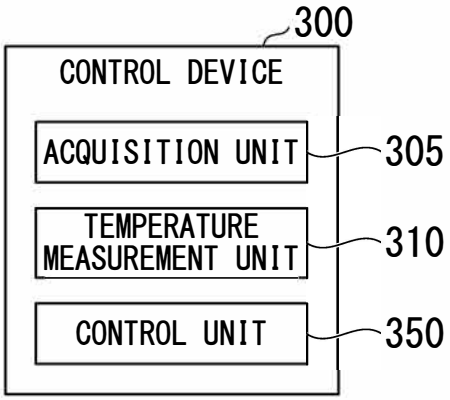
300
CONTROL DEVICE
ACQUISITION UNIT
305
TEMPERATURE MEASUREMENT UNIT
310
CONTROL UNIT
350

FIG. 5

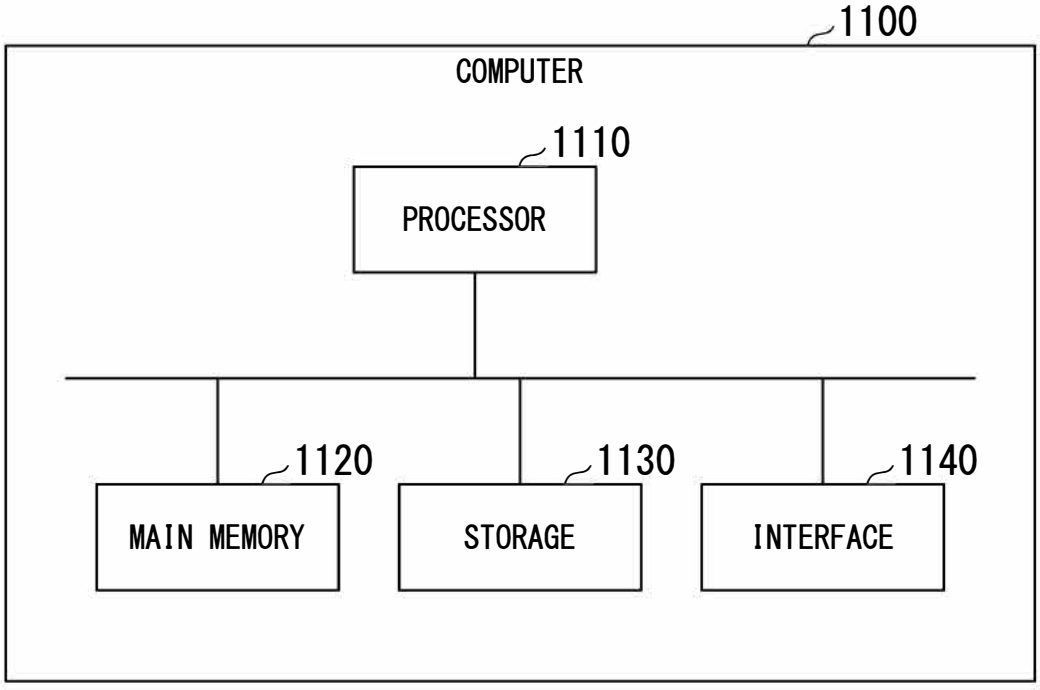
1100
COMPUTER
1110
PROCESSOR
1120
MAIN MEMORY
1130
STORAGE
1140
INTERFACE

FIG. 6