(12) INTERNATIONAL APPLICATION PUBLISHED UNDER THE PATENT COOPERATION TREATY (PCT)

(19) World Intellectual Property Organization
International Bureau

(43) International Publication Date
17 October 2002 (17.10.2002)

PCT

(10) International Publication Number
WO 02/081786 A1

(51) International Patent Classification[7]: C30B 15/00, 29/06, 15/02

(21) International Application Number: PCT/US01/51653

(22) International Filing Date: 23 October 2001 (23.10.2001)

(25) Filing Language: English

(26) Publication Language: English

(30) Priority Data:
09/711,198 9 November 2000 (09.11.2000) US

(71) Applicant: MEMC ELECTRONIC MATERIALS, INC. [US/US]; P.O. Box 8, 501 Pearl Drive, St. Peters, MO 63376 (US).

(72) Inventors: FUERHOFF, Robert, H.; 3700 Runnymede Drive, St. Charles, MO 63301 (US). BANAN, Mohsen; 16406 Bayshore Cover Court, Grover, MO 63040 (US). HOLDER, John, D.; 73 Schooner Lane, Lake St. Louis, MO 63367 (US).

(74) Agents: BRIDGE, Richard, L. et al.; One Metropolitan Square, Suite 1600, St. Louis, MO 63102 (US).

(81) Designated States *(national)*: CN, JP, KR, SG.

(84) Designated States *(regional)*: European patent (AT, BE, CH, CY, DE, DK, ES, FI, FR, GB, GR, IE, IT, LU, MC, NL, PT, SE, TR).

Published:
— *with international search report*
— *before the expiration of the time limit for amending the claims and to be republished in the event of receipt of amendments*

For two-letter codes and other abbreviations, refer to the "Guidance Notes on Codes and Abbreviations" appearing at the beginning of each regular issue of the PCT Gazette.

(54) Title: METHOD AND APPARATUS FOR PREPARING MOLTEN SILICON MELT FROM POLYCRYSTALLINE SILICON CHARGE

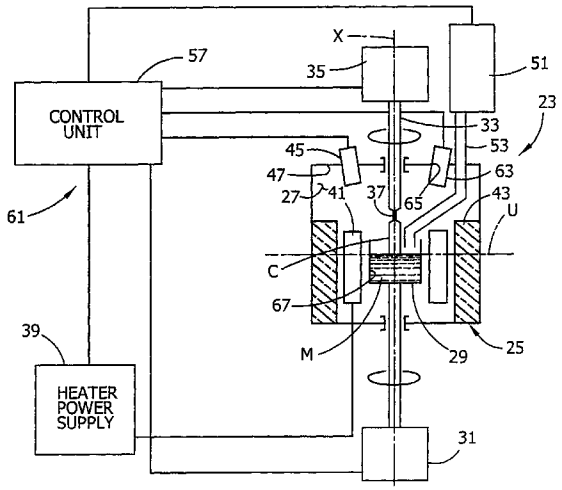

(57) Abstract: A method and apparatus for preparing molten silicon melt from polycrystalline silicon in a crystal pulling apparatus entails loading an amount of polycrystalline silicon loaded into the crucible less than a predetermined total amount of polycrystalline silicon to be melted. The crucible is heated to form a partially melted charge in the crucible having an island of unmelted polycrystalline silicon exposed above an upper surface of melted silicon. Granular polycrystalline silicon is fed from a feeder onto the island of unmelted polycrystalline silicon until the predetermined total amount of polycrystalline silicon has been loaded into the crucible. The position of the island relative to the crucible side wall is electronically determined as granular polycrystalline silicon is fed onto the island. The feed rate at which granular polycrystalline silicon is fed from the feeder onto the island of unmelted polycrystalline silicon is controlled in response to the determined position of the island relative to the crucible side wall.

WO 02/081786 A1